C.P.T.
Präzisions Werkzeuge



English

Company Profile

CPT is a leading manufacturer of high-quality cutting tools, especially in threading.

Our products are used in a wide variety of industries such as engineering, aerospace, hydraulics, pneumatics, automotive, Oil & Gas, shipbuilding and railways as well as dental and medical.

Product Lines:

Our product portfolio includes wide range of indexable inserts and holders for thread turning and thread milling, solid carbide thread mills, grooving, swiss tools, solid carbide milling tools and tiny tools.
CPT offers tailor made tools upon customer's requests.

In addition to our outstanding products, we offer professional technical support by our expert engineering department.

You can rely on CPT products to lead you to higher Productivity, Profitability and Performance.

Our success is based on the commitment to provide our customer's the highest quality of innovative cutting tools, outstanding technical service and fast deliveries throughout our global distribution network.

CPT Tool Wizard

CPT offers an online software for Thread Turning and Mill-Thread to assist threading tools users to select and apply the correct tools to machine threads on CNC machining centers.

Both programs will find tools that are suitable for your application, calculate or adjust cutting data depending on the machining capability, and generate CNC program for a variety of controls.

The software is available on our website **www.cpt-gewindewerkzeuge.de/home**
Click on "Software".



Special Tools

In addition to standard products, CPT has a worldwide reputation for the design and manufacture of special tools according to customers' application.

Special tools are supplied in short delivery times.

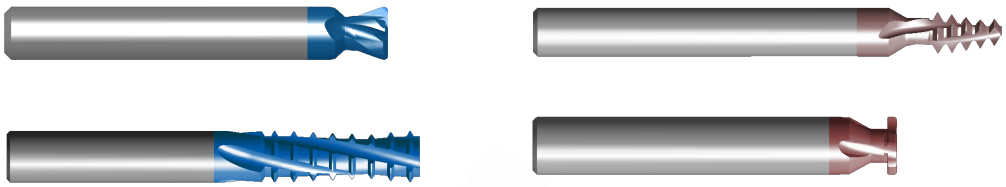

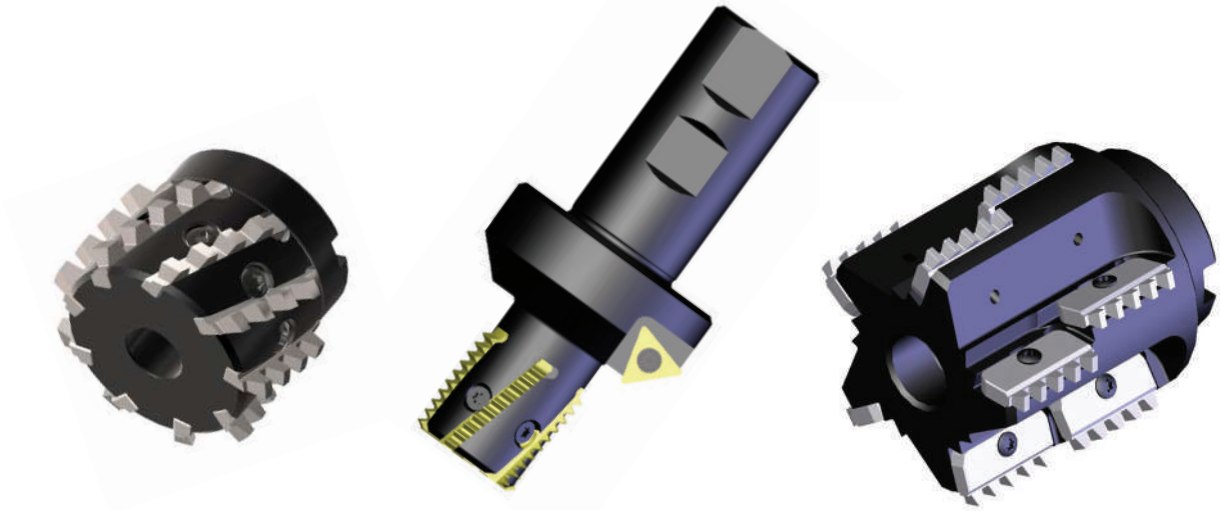

CPT and the Environment

CPT is fully committed to sustainable production methods.
Our green central filtration and waste management system is a good example.
This not only maximizes resource use, but also enables us to dispose of our waste in an environmentally responsible way.



New Products for this Catalog

Thread - Turning

Oil & Gas

Threading Tools for the Oil & Gas industries



Page: A01-32 to 44

Large Profile Inserts and Toolholders



Page: A01-45 to 50

New Inserts for most of the existing applications

x-tream Jet External Toolholders with Internal Coolant

A top clamp directing the coolant flow to the cutting edge



Page: A02-7

Modular Line

Turning adaptors and boring bars for internal threading and grooving applications



Page: A02-13 to 16

Tiny Tools

CBR

Boring and profiling with advanced chip breaker



Page: A06-5

MIR

New inserts for MJ 60°, UNJ 60° and Full Profile - G55° threads

Page: A06-12 to 18

MFR

New inserts for Face Grooving with chip former



Page: A06-26

New Inserts for most of the existing applications & new Toolholders

Toolholders for Star Swiss machines



Page: A06-34

CIM

Fast clamping system

PATENT PENDING



Page: A06-35 to 38

Square Shank Toolholders

For internal machining



Page: A06-39 to 41

New Products for this Catalog

Mini Tools

New Inserts

- Threading - Acme & Trapez DIN 103
- Boring, Profiling and Facing
- Grooving, Circlip Ring Grooves DIN 471/472
- Boring and Profiling



New Inserts for most of the existing applications & new Toolholders

Page: A07-1 to 14

Swiss Line

- New line of polygon inserts and toolholders
- New 25 and 40 mm sized polygon inserts
- New GX7 advanced grade - high toughness for optimized performance
- New line of 16 mm sized 3 cutting edges inserts and toolholders
- G4 - New line of 4 cutting edges turning inserts and toolholders for grooving, parting-off and threading applications
- G6 - New line of 6 cutting edges inserts and toolholders for grooving, parting, turning and threading



Page: A08-1 to 50

Carbide Shank Turning Toolholders and Inserts

Expanded range of Carbide Shank Turning Toolholders



Page: A09-1 to 5

New Products for this Catalog

Mill - Thread Inserts and Toolholders

New Inserts

- NPSM
- API RD

New inserts for existing profiles



Page: B01-8 and 10

Slim MT

High productivity, Slim cost

A new product line of indexable Mill-Thread inserts and toolholders including multiple straight flutes for machining long threads from small to large diameters



Page: B03-1 to 10

CMT - Vertical Milling

New Inserts

- Threading - Round DIN 405
- Dovetail 45˚
- Groove Milling DIN 471/472
- Groove Milling Multi - Flute DIN 471/472
- Front and back corner rounding
- Front and back corner rounding - Multi Flute



New Shell Mill Cutter

New inserts for most of the existing profiles

Page: B07-1 to 30

Mill - Thread Solid Carbide

MTB

New Thread-Mills for Whitworth, MJ and UNJ profiles

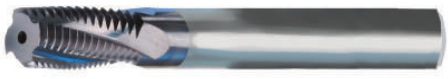

Section: B08

AMT

Solid Carbide Thread-Mills for high-speed Aluminum machining



Section: B08

EMT - External Thread Mills

New Thread-Mills for MJ and UNJ profiles for Aerospace



Page: B08-28

New Products for this Catalog

Mini Mill - Thread

MTS Dental

New Thread-Mills for the Dental Implants Industry



Page: B09-9

MTSB

Solid Carbide Thread-Mills with internal coolant bore and increased number of flutes for high performance, shorter cycle time and improved tool life



Page: B09-10 to 12

FMTI Multi Flute

Solid Carbide Thread-Mills with a large number of flutes, for increased productivity and high performance



Page: B09-17

Multi - Function Thread Mills 3 in 1 Operations

DMT

Thread-Mills for G (BSP) and NPT profiles



Page: B10-5

MT Drill - MTD

Designed to drill, chamfer and thread mill the hole in one operation



Page: B10-8 to 9

Hardcut

MTSH

Thread-Mills for MJ and UNJ profiles



Page: B11-5

FSH

High productive Solid Carbide Thread-Mills with a large number of flutes for machining hard materials up to 65 HRC



Page: B11-6

Supercut Solid Carbide Mills

High Performance CR - Supercut End - Mills

- Designed for high feed machining and high metal removal rate
- Compatible for a wide range of materials



Page: B14-2 to 19

Multi - Function Milling Tools

Performs multiple operations with one tool

- Spotting and Drilling • Side Milling • Chamfering
- Slotting • Grooving • Engraving



Page: B14-20 to 23

New Products for this Catalog

CR - Supercut Roughers

- New innovative high performance mills
- Specifically designed for high volume machining applications



Page: B14-24 to 30

CR - Supercut High Feed End-Mills

High performance milling tools, designed for high feed rates with shallow cutting depths



Page: B14-34 to 39

Indexable CMT Roughers and Finishers

For excellent performance

Modular system using the standard CMT tool holders with various shank options

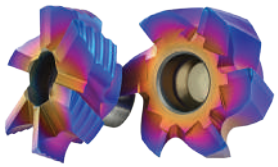

Page: B14-31 to 33

Mini Chamfer and Countersink

Solid Carbide Radius Fillet End-Mills

- Tools for different radius filleting
- Two, three and four flutes
- Cylindrical shank DIN6535-HA



Page: B15-6

Countersink - Solid Carbide Chamfering End-Mills

- Tools for 45˚ and 60˚ chamfering and deburring
- Four flutes
- Cylindrical shank DIN6535-HA (Weldon shank available upon request)

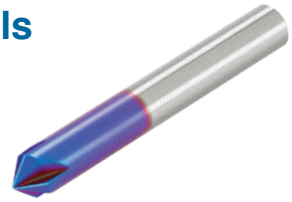

Page: B15-7

Gear Milling

Innovative tools for gear, spline, and rack manufacturing



Page: B16-1 to 4

Main Content

Page:

Turning Tools A01-A10

Milling Tools B01-B16

C.P.T.

Turning Tools

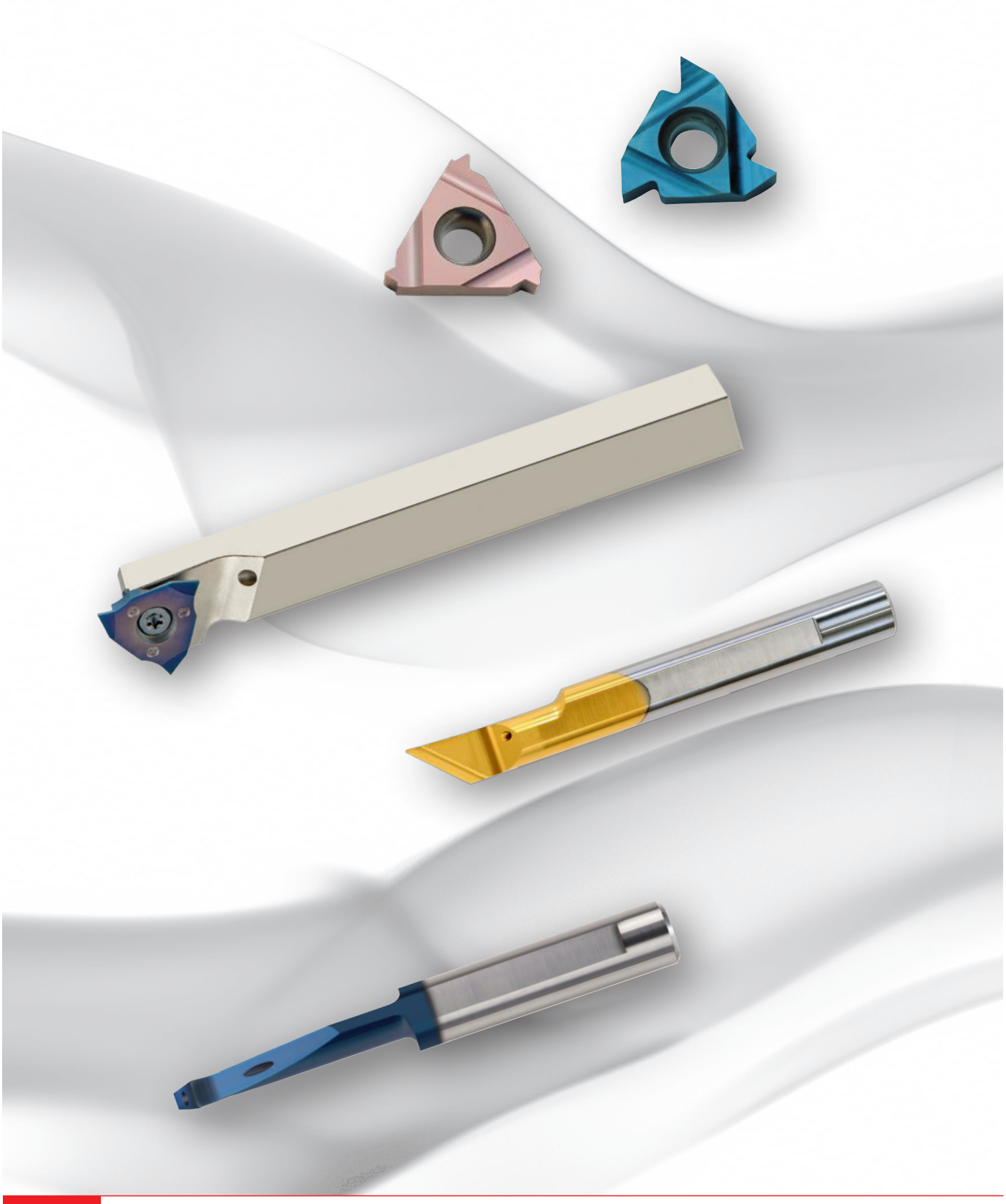

CONTENTS:

		Page:	
A01	Thread Turning Inserts	1- 50	
A02	Thread Turning Toolholders and Kits	1- 24	
A03	Double Sided Thread Turning Inserts and Toolholders	1- 6	
A04	Thread Turning Technical Section	1-10	
A05	Grooving Tools	1- 4	
A06	Tiny Tools	1- 46	
A07	Mini Tools	1- 14	
A08	Swiss Line	1- 50	
A09	Carbide Shank Turning Toolholders and Inserts	1- 6	
A10	Thread Whirling	1- 4	

Thread Turning Inserts

A01

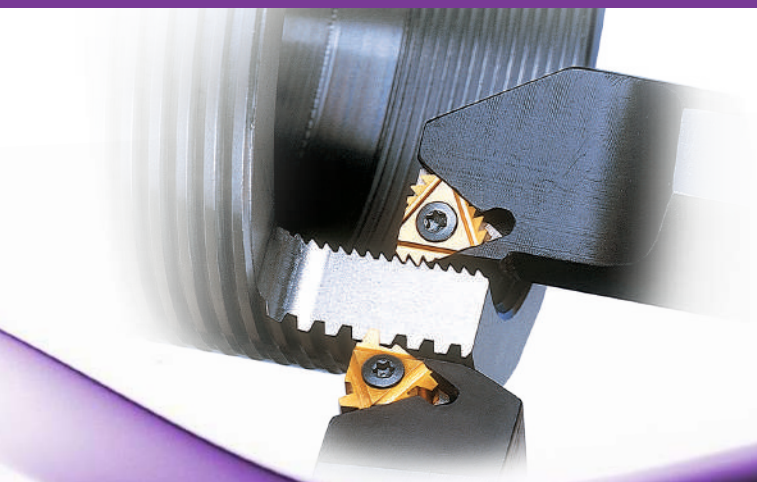



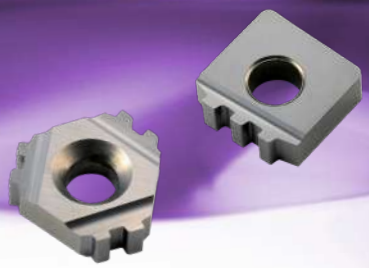

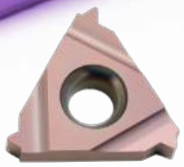

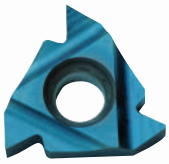

Type B
Demonstration

Contents:	Page:
Product Identification	2
Partial Profile 60°	3-4
Partial Profile 55°	5-6
ISO - metric	7-9
UN - Unified	10-13
Whitworth - 55°	14-17
NPT	18 -19
NPTF	20
BSPT	21-22
DIN 477	22
Acme	23
Stub Acme	24
Trapez - DIN 103	25
PG - DIN 40430	26
Sagengewinde - DIN 513	26
Round - DIN 405	27
Round - DIN 20400	27
UNJ	28-29
MJ - ISO 5855	30
American Buttress	31
Threading Tools for the Oil & Gas Indusries	32-44
API Round	32
V-0.040	33
V-0.038R	33
V-0.050	33
V-0.055	33
Extreme - Line Casing	34
Buttress Casing	34

Contents:	Page:
VAM	34
HUGHES	35
PAC	35
NPS	36
NPSM	36
Vertical API	37
Vertical API Buttress Casing	38
Vertical API Round	39
Chasers API Round	40
Chasers API Buttress Casing	41
Chasers OTTM Buttress Casing	41
Chasers API Buttress Casing	42
Chasers OTTM Buttress Casing	42
Chasers API Buttress Casing	43
Chasers OTTM Buttress Casing	43
Chasers API Buttress Casing	44
Chasers OTTM Buttress Casing	44
Large Profile Inserts and Toolholders	45-50
Large Profile Inserts Trapez - DIN 103	45
External Holders	46
Internal Holders	47
Large Profile Sagengewinde Inserts DIN 513	48
External Holders	49
Internal Holders	50

Product Identification

Thread Turning Inserts Ordering Codes

16	E	R		12	UN		BMA

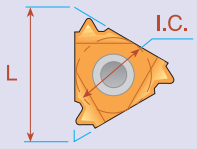

L	I.C.
06	5/32″
08	3/16″
08U	3/16″U
11	1/4″
16	3/8″
16V	3/8″
22	1/2″
22U	1/2″U
22V	1/2″
27	5/8″
27U	5/8″U
27V	5/8″
33U	3/4″U

E = External
I = Internal

R = Right Hand
L = Left Hand

B = Type B

Pitch
in mm:
0.35-12

or TPI
(Threads
per Inch)
72-2

Full Profiles:
ISO
UN
WHIT
NPT
NPTF
BSPT
DIN 477
ACME
ST.ACME
TRAPEZ
ROUND
UNJ
MJ
PG
AM. BUTT.
SAGE
API
VAM

Partial Profiles:
A
G
AG
N
Q
U

Multitooth style & number of teeth

API size & taper

Carbide Grade:
P30
K20
BMA
MXC
P25C
BXC
BLU
HBA

Partial Profile 60°

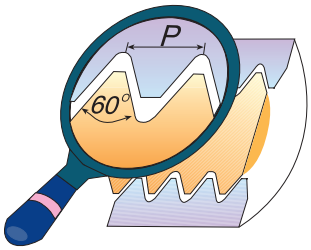

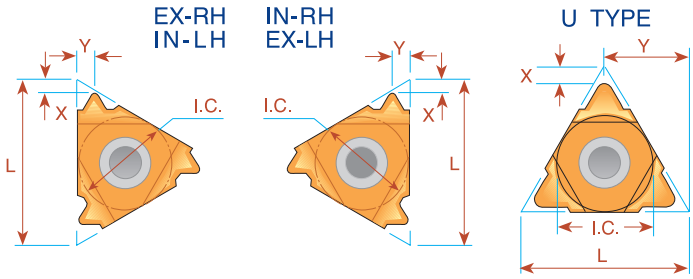

L	I.C. in	Pitch Range mm	Pitch Range TPI	EXTERNAL Ordering Code Right Hand	EXTERNAL Ordering Code Left Hand	INTERNAL Ordering Code Right Hand	INTERNAL Ordering Code Left Hand	X	Y
6	5/32	0.5 - 1.25	48 - 20	*ULTRA MINIATURE* →		***06 IR A60**	***06 IL A60**	0.6	0.6
8	3/16	0.5 - 1.5	48 - 16	*MINIATURE* →		***08 IR A60**	***08 IL A60**	0.6	0.7
8U	3/16U	1.75 - 2.0	14 - 11	*"U" MINIATURE* →		***08U IR/L U60**		0.8	4.0
11	1/4	0.5 - 1.5	48 - 16	**11 ER A60**	**11 EL A60**	**11 IR A60**	**11 IL A60**	0.8	0.9
16	3/8	0.5 - 1.5	48 - 16	**16 ER A60**	**16 EL A60**	**16 IR A60**	**16 IL A60**	0.8	0.9
16	3/8	1.75 - 3.0	14 - 8	**16 ER G60**	**16 EL G60**	**16 IR G60**	**16 IL G60**	1.2	1.7
16	3/8	0.5 - 3.0	48 - 8	**16 ER AG60**	**16 EL AG60**	**16 IR AG60**	**16 IL AG60**	1.2	1.7
22	1/2	3.5 - 5.0	7 - 5	**22 ER N60**	**22 EL N60**	**22 IR N60**	**22 IL N60**	1.7	2.5
22U	1/2U	5.5 - 8.0	4.5 - 3.25	**22U E/I/R/L U60**				0.6	11.0
27	5/8	5.5 - 6.0	4.5 - 4	**27 ER Q60**	**27 EL Q60**	**27 IR Q60**	**27 IL Q60**	2.1	3.1
27U	5/8U	6.5 - 9.0	4 - 2.75	**27U E/I/R/L U60**				1.0	13.7

* Available only in BXC and BMA grades

Order example: 16 ER G60 MXC

For small bore threading see page A06-12

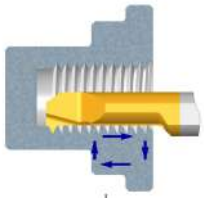

Type B

Ground profile with sintered chip-breaker

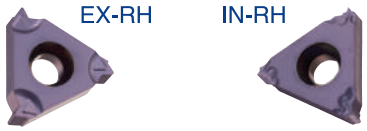

L	I.C. in	Pitch Range mm	Pitch Range TPI	EXTERNAL Ordering Code Right Hand	INTERNAL Ordering Code Right Hand	X	Y
16	3/8	0.5 - 1.5	48 -16	**16 ER B A60**	**16 IR B A60**	0.8	0.9
16	3/8	1.75 - 3.0	14 - 8	**16 ER B G60**	**16 IR B G60**	1.2	1.7
16	3/8	0.5 - 3.0	48 - 8	**16 ER B AG60**	**16 IR B AG60**	1.2	1.7

Order example: 16 ER B G60 BMA

For carbide grade and cutting speed see page A04-2 and 3

Partial Profile 60°
Vertical

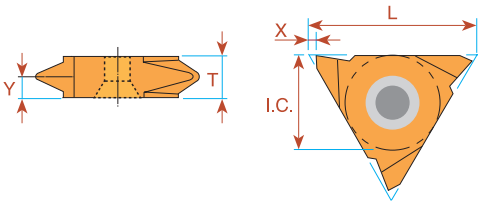

L	I.C. in	Pitch Range mm	Pitch Range TPI	EXTERNAL Ordering Code Right Hand	EXTERNAL Ordering Code Left Hand	INTERNAL Ordering Code Right Hand	INTERNAL Ordering Code Left Hand	X	Y	T
16	3/8	0.5 - 1.5	48 - 16	**16V ER A60**	**16V EL A60**			1.0	0.9	3.6
16	3/8	1.75 - 3.0	14 - 8	**16V ER G60**	**16V EL G60**			1.0	1.8	3.6
16	3/8	0.5 - 3.0	48 - 8	**16V ER AG60**	**16V EL AG60**			1.0	1.8	3.6
22	1/2	1.75 - 3.0	14 - 8	**22V ER G60**	**22V EL G60**			1.2	1.7	4.0
22	1/2	3.5 - 5.0	7 - 5	**22V ER N60**	**22V EL N60**			1.2	2.5	4.8
27	5/8	6.0 - 10.0	4 - 2.5	**27V ER V60**	**27V EL V60**	**27V IR V60**	**27V IL V60**	1.8	5.2	10.4

Order example: 16V ER G60 BMA

For carbide grade and cutting speed see page A04-2 and 3

Partial Profile 55°

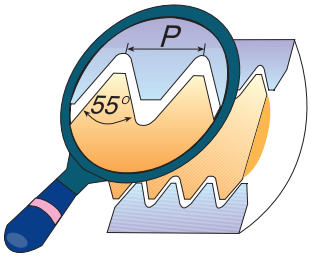

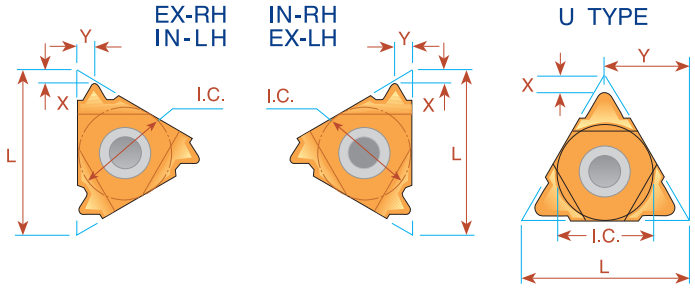

L	I.C. in	Pitch Range mm	Pitch Range TPI	EXTERNAL Ordering Code Right Hand	EXTERNAL Ordering Code Left Hand	INTERNAL Ordering Code Right Hand	INTERNAL Ordering Code Left Hand	X	Y
6	5/32	0.5 - 1.25	48 - 20	*ULTRA MINIATURE* →		***06 IR A55**	***06 IL A55**	0.5	0.6
8	3/16	0.5 - 1.5	48 - 16	*MINIATURE* →		***08 IR A55**	***08 IL A55**	0.6	0.7
8U	3/16U	1.75 - 2.0	14 - 11	*"U" MINIATURE* →		***08U IR/L U55**		0.9	4.0
11	1/4	0.5 - 1.5	48 - 16	**11 ER A55**	**11 EL A55**	**11 IR A55**	**11 IL A55**	0.8	0.9
16	3/8	0.5 - 1.5	48 - 16	**16 ER A55**	**16 EL A55**	**16 IR A55**	**16 IL A55**	0.8	0.9
16	3/8	1.75 - 3.0	14 - 8	**16 ER G55**	**16 EL G55**	**16 IR G55**	**16 IL G55**	1.2	1.7
16	3/8	0.5 - 3.0	48 - 8	**16 ER AG55**	**16 EL AG55**	**16 IR AG55**	**16 IL AG55**	1.2	1.7
22	1/2	3.5 - 5.0	7 - 5	**22 ER N55**	**22 EL N55**	**22 IR N55**	**22 IL N55**	1.7	2.5
22U	1/2U	5.5 - 8.0	4.5 - 3.25	**22U E/I/R/L U55**				0.9	11.0
27	5/8	5.5 - 6.0	4.5 - 4	**27 ER Q55**	**27 EL Q55**	**27 IR Q55**	**27 IL Q55**	2.0	2.9
27U	5/8U	6.5 - 9.0	4 - 2.75	**27U E/I/R/L U55**				1.2	13.7

* Available only in BXC and BMA grades

Order example: 16 ER G55 MXC

For small bore threading see page A06-12

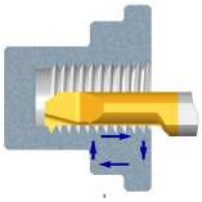

Type B

Ground profile with sintered chip-breaker



L	I.C. in	Pitch Range mm	Pitch Range TPI	EXTERNAL Ordering Code Right Hand	INTERNAL Ordering Code Right Hand	X	Y
16	3/8	1.75 - 3.0	14 - 8	**16 ER B G55**	**16 IR B G55**	1.2	1.7
16	3/8	0.5 - 3.0	48 - 8	**16 ER B AG55**	**16 IR B AG55**	1.2	1.7

Order example: 16 ER B G55 BMA

For carbide grade and cutting speed see page A04-2 and 3

Partial Profile 55°
Vertical

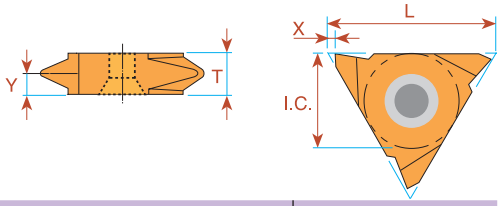

L	I.C. in	Pitch Range mm	Pitch Range TPI	EXTERNAL Ordering Code Right Hand	EXTERNAL Ordering Code Left Hand	INTERNAL Ordering Code Right Hand	INTERNAL Ordering Code Left Hand	X	Y	T
16	3/8	0.5 - 1.5	48 - 16	**16V ER A55**	**16V EL A55**			1.0	0.9	3.6
16	3/8	1.75 - 3.0	14 - 8	**16V ER G55**	**16V EL G55**			1.0	1.7	3.6
16	3/8	0.5 - 3.0	48 - 8	**16V ER AG55**	**16V EL AG55**			1.0	1.8	3.6
22	1/2	3.5 - 5.0	7 - 5	**22V ER N55**	**22V EL N55**			1.2	2.5	4.8
27	5/8	6.0 - 10.0	4 - 2.5	**27V ER V55**	**27V EL V55**	**27V IR V55**	**27V IL V55**	1.8	5.2	10.4

Order example: 22V ER N55 BMA

For carbide grade and cutting speed see page A04-2 and 3

ISO - metric

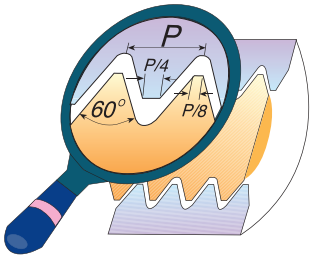

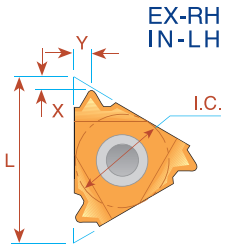

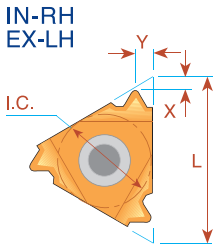

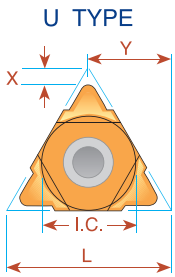

Pitch mm	L	I.C. in	EXTERNAL Ordering Code Right Hand	EXTERNAL Ordering Code Left Hand	EXTERNAL X	EXTERNAL Y	INTERNAL Ordering Code Right Hand	INTERNAL Ordering Code Left Hand	INTERNAL X	INTERNAL Y
0.25	6	5/32					*06 IR 0.25 ISO	*06 IL 0.25 ISO	0.7	0.3
0.5	6	5/32					*06 IR 0.5 ISO	*06 IL 0.5 ISO	0.9	0.5
0.75	6	5/32	*ULTRA MINIATURE* →				*06 IR 0.75 ISO	*06 IL 0.75 ISO	0.8	0.5
1.0	6	5/32					*06 IR 1.0 ISO	*06 IL 1.0 ISO	0.7	0.6
1.25	6	5/32					*06 IR 1.25 ISO	*06 IL 1.25 ISO	0.6	0.6
0.25	8	3/16					*08 IR 0.25 ISO	*08 IL 0.25 ISO	0.7	0.3
0.5	8	3/16					*08 IR 0.5 ISO	*08 IL 0.5 ISO	0.6	0.5
0.75	8	3/16	*MINIATURE* →				*08 IR 0.75 ISO	*08 IL 0.75 ISO	0.6	0.5
1.0	8	3/16					*08 IR 1.0 ISO	*08 IL 1.0 ISO	0.6	0.6
1.25	8	3/16					*08 IR 1.25 ISO	*08 IL 1.25 ISO	0.6	0.7
1.5	8	3/16					*08 IR 1.5 ISO	*08 IL 1.5 ISO	0.6	0.7
1.75	8	3/16					*08 IR 1.75 ISO	*08 IL 1.75 ISO	0.6	0.8
2.0	8U	3/16U	*"U" MINIATURE* →				*08U IR/L 2.0 ISO		0.9	4.0
0.25	11	1/4	11 ER 0.25 ISO	11 EL 0.25 ISO	0.6	0.2				
0.3	11	1/4	11 ER 0.3 ISO	11 EL 0.3 ISO	0.8	0.3				
0.35	11	1/4	11 ER 0.35 ISO	11 EL 0.35 ISO	0.8	0.4	11 IR 0.35 ISO	11 IL 0.35 ISO	0.8	0.3
0.4	11	1/4	11 ER 0.4 ISO	11 EL 0.4 ISO	0.7	0.4	11 IR 0.4 ISO	11 IL 0.4 ISO	0.8	0.4
0.45	11	1/4	11 ER 0.45 ISO	11 EL 0.45 ISO	0.7	0.4	11 IR 0.45 ISO	11 IL 0.45 ISO	0.8	0.4
0.5	11	1/4	11 ER 0.5 ISO	11 EL 0.5 ISO	0.6	0.6	11 IR 0.5 ISO	11 IL 0.5 ISO	0.6	0.6
0.6	11	1/4	11 ER 0.6 ISO	11 EL 0.6 ISO	0.6	0.6	11 IR 0.6 ISO	11 IL 0.6 ISO	0.6	0.6
0.7	11	1/4	11 ER 0.7 ISO	11 EL 0.7 ISO	0.6	0.6	11 IR 0.7 ISO	11 IL 0.7 ISO	0.6	0.6
0.75	11	1/4	11 ER 0.75 ISO	11 EL 0.75 ISO	0.6	0.6	11 IR 0.75 ISO	11 IL 0.75 ISO	0.6	0.6
0.8	11	1/4	11 ER 0.8 ISO	11 EL 0.8 ISO	0.6	0.6	11 IR 0.8 ISO	11 IL 0.8 ISO	0.6	0.6
1.0	11	1/4	11 ER 1.0 ISO	11 EL 1.0 ISO	0.7	0.7	11 IR 1.0 ISO	11 IL 1.0 ISO	0.6	0.7
1.25	11	1/4	11 ER 1.25 ISO	11 EL 1.25 ISO	0.8	0.9	11 IR 1.25 ISO	11 IL 1.25 ISO	0.8	0.8
1.5	11	1/4	11 ER 1.5 ISO	11 EL 1.5 ISO	0.8	1.0	11 IR 1.5 ISO	11 IL 1.5 ISO	0.8	1.0
1.75	11	1/4	11 ER 1.75 ISO	11 EL 1.75 ISO	0.8	1.1	11 IR 1.75 ISO	11 IL 1.75 ISO	0.8	1.1
2.0	11	1/4	11 ER 2.0 ISO	11 EL 2.0 ISO	0.8	1.1	11 IR 2.0 ISO	11 IL 2.0 ISO	0.8	0.9
2.5	11	1/4					11 IR 2.5 ISO	11 IL 2.5 ISO	0.8	1.2
0.25	16	3/8	16 ER 0.25 ISO	16 EL 0.25 ISO	0.6	0.2				
0.3	16	3/8	16 ER 0.3 ISO	16 EL 0.3 ISO	0.8	0.3				
0.35	16	3/8	16 ER 0.35 ISO	16 EL 0.35 ISO	0.8	0.4	16 IR 0.35 ISO	16 IL 0.35 ISO	0.8	0.3
0.4	16	3/8	16 ER 0.4 ISO	16 EL 0.4 ISO	0.7	0.4	16 IR 0.4 ISO	16 IL 0.4 ISO	0.8	0.4
0.45	16	3/8	16 ER 0.45 ISO	16 EL 0.45 ISO	0.7	0.4	16 IR 0.45 ISO	16 IL 0.45 ISO	0.8	0.4
0.5	16	3/8	16 ER 0.5 ISO	16 EL 0.5 ISO	0.6	0.6	16 IR 0.5 ISO	16 IL 0.5 ISO	0.6	0.6
0.6	16	3/8	16 ER 0.6 ISO	16 EL 0.6 ISO	0.6	0.6	16 IR 0.6 ISO	16 IL 0.6 ISO	0.6	0.6
0.7	16	3/8	16 ER 0.7 ISO	16 EL 0.7 ISO	0.6	0.6	16 IR 0.7 ISO	16 IL 0.7 ISO	0.6	0.6
0.75	16	3/8	16 ER 0.75 ISO	16 EL 0.75 ISO	0.6	0.6	16 IR 0.75 ISO	16 IL 0.75 ISO	0.6	0.6
0.8	16	3/8	16 ER 0.8 ISO	16 EL 0.8 ISO	0.6	0.6	16 IR 0.8 ISO	16 IL 0.8 ISO	0.6	0.6
1.0	16	3/8	16 ER 1.0 ISO	16 EL 1.0 ISO	0.7	0.7	16 IR 1.0 ISO	16 IL 1.0 ISO	0.6	0.7
1.25	16	3/8	16 ER 1.25 ISO	16 EL 1.25 ISO	0.8	0.9	16 IR 1.25 ISO	16 IL 1.25 ISO	0.8	0.9
1.5	16	3/8	16 ER 1.5 ISO	16 EL 1.5 ISO	0.8	1.0	16 IR 1.5 ISO	16 IL 1.5 ISO	0.8	1.0
1.75	16	3/8	16 ER 1.75 ISO	16 EL 1.75 ISO	0.9	1.2	16 IR 1.75 ISO	16 IL 1.75 ISO	0.9	1.2
2.0	16	3/8	16 ER 2.0 ISO	16 EL 2.0 ISO	1.0	1.3	16 IR 2.0 ISO	16 IL 2.0 ISO	1.0	1.3
2.5	16	3/8	16 ER 2.5 ISO	16 EL 2.5 ISO	1.1	1.5	16 IR 2.5 ISO	16 IL 2.5 ISO	1.1	1.5
3.0	16	3/8	16 ER 3.0 ISO	16 EL 3.0 ISO	1.2	1.6	16 IR 3.0 ISO	16 IL 3.0 ISO	1.1	1.5
3.5	16	3/8	16 ER 3.5 ISO	16 EL 3.5 ISO	1.2	1.7	16 IR 3.5 ISO	16 IL 3.5 ISO	1.2	1.7

* Available only in BXC and BMA grades

ISO - metric

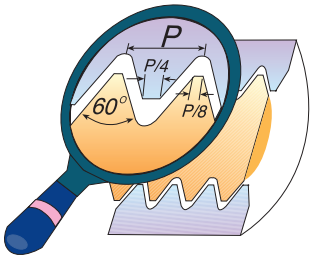

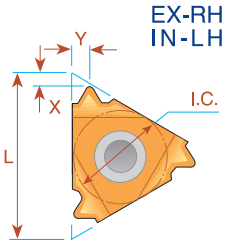

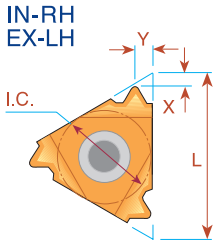

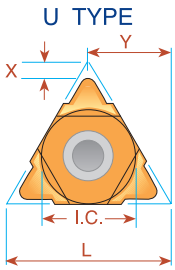

Pitch mm	L	I.C. in	EXTERNAL Ordering Code Right Hand	EXTERNAL Ordering Code Left Hand	X	Y	INTERNAL Ordering Code Right Hand	INTERNAL Ordering Code Left Hand	X	Y
3.5	22	1/2	22 ER 3.5 ISO	22 EL 3.5 ISO	1.6	2.3	22 IR 3.5 ISO	22 IL 3.5 ISO	1.6	2.3
4.0	22	1/2	22 ER 4.0 ISO	22 EL 4.0 ISO	1.6	2.3	22 IR 4.0 ISO	22 IL 4.0 ISO	1.6	2.3
4.5	22	1/2	22 ER 4.5 ISO	22 EL 4.5 ISO	1.7	2.4	22 IR 4.5 ISO	22 IL 4.5 ISO	1.6	2.4
5.0	22	1/2	22 ER 5.0 ISO	22 EL 5.0 ISO	1.7	2.5	22 IR 5.0 ISO	22 IL 5.0 ISO	1.6	2.3
5.5	22	1/2	22 ER 5.5 ISO	22 EL 5.5 ISO	1.7	2.6	22 IR 5.5 ISO	22 IL 5.5 ISO	1.6	2.3
6.0	22	1/2	**22 ER 6.0 ISO	**22 EL 6.0 ISO	1.9	2.7	22 IR 6.0 ISO	22 IL 6.0 ISO	1.6	2.4
5.5	22U	1/2U	22U ER/L 5.5 ISO		2.3	11.0	22U IR/L 5.5 ISO		2.4	11.0
6.0	22U	1/2U	22U ER/L 6.0 ISO		2.6	11.0	22U IR/L 6.0 ISO		2.1	11.0
5.5	27	5/8	27 ER 5.5 ISO	27 EL 5.5 ISO	1.9	2.7	27 IR 5.5 ISO	27 IL 5.5 ISO	1.6	2.3
6.0	27	5/8	27 ER 6.0 ISO	27 EL 6.0 ISO	2.0	2.9	27 IR 6.0 ISO	27 IL 6.0 ISO	1.8	2.5
8.0	27U	5/8U	27U ER/L 8.0 ISO		2.4	13.7	27U IR/L 8.0 ISO		2.4	13.7
12.0	33U	3/4U	33U ER/L 12.0 ISO		2.5	16.5	33U IR/L 12.0 ISO		3.5	16.9

** Special holder required

Order example: 22 IR 3.5 ISO BMA

For small bore threading see page A06-13

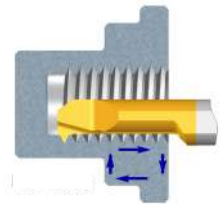

Type B

Ground profile with sintered chip-breaker

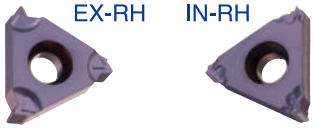

Pitch mm	L	I.C. in	EXTERNAL Ordering Code Right Hand	X	Y	INTERNAL Ordering Code Right Hand	X	Y
0.5	11	1/4				11 IR B 0.5 ISO	0.6	0.6
0.75	11	1/4				11 IR B 0.75 ISO	0.6	0.6
0.8	11	1/4				11 IR B 0.8 ISO	0.6	0.6
1.0	11	1/4				11 IR B 1.0 ISO	0.6	0.6
1.25	11	1/4				11 IR B 1.25 ISO	0.8	0.9
1.5	11	1/4				11 IR B 1.5 ISO	0.8	0.9
1.75	11	1/4				11 IR B 1.75 ISO	0.8	0.9
2.0	11	1/4				11 IR B 2.0 ISO	0.8	0.9
0.8	16	3/8	16 ER B 0.8 ISO	0.6	0.6			
1.0	16	3/8	16 ER B 1.0 ISO	0.7	0.7	16 IR B 1.0 ISO	0.6	0.7
1.25	16	3/8	16 ER B 1.25 ISO	0.8	0.9	16 IR B 1.25 ISO	0.8	0.9
1.5	16	3/8	16 ER B 1.5 ISO	0.8	1.0	16 IR B 1.5 ISO	0.8	1.0
1.75	16	3/8	16 ER B 1.75 ISO	0.9	1.2	16 IR B 1.75 ISO	0.9	1.2
2.0	16	3/8	16 ER B 2.0 ISO	1.0	1.3	16 IR B 2.0 ISO	1.0	1.3
2.5	16	3/8	16 ER B 2.5 ISO	1.1	1.5	16 IR B 2.5 ISO	1.1	1.5
3.0	16	3/8	16 ER B 3.0 ISO	1.2	1.6	16 IR B 3.0 ISO	1.1	1.5

Order example: 16 IR B 1.5 ISO BMA

For carbide grade and cutting speed see page A04-2 and 3

ISO - *metric*
Vertical

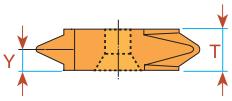

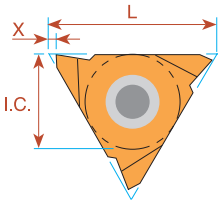

Pitch mm	L	I.C. in	EXTERNAL Ordering Code Right Hand	EXTERNAL Ordering Code Left Hand	INTERNAL Ordering Code Right Hand	INTERNAL Ordering Code Left Hand	X	Y	T
0.5	16	3/8	16V ER 0.5 ISO	16V EL 0.5 ISO			1.0	0.6	3.6
0.75	16	3/8	16V ER 0.75 ISO	16V EL 0.75 ISO			1.0	0.6	3.6
0.8	16	3/8	16V ER 0.8 ISO	16V EL 0.8 ISO			1.0	0.6	3.6
1.0	16	3/8	16V ER 1.0 ISO	16V EL 1.0 ISO			1.0	0.7	3.6
1.25	16	3/8	16V ER 1.25 ISO	16V EL 1.25 ISO			1.0	0.9	3.6
1.5	16	3/8	16V ER 1.5 ISO	16V EL 1.5 ISO			1.0	0.9	3.6
1.75	16	3/8	16V ER 1.75 ISO	16V EL 1.75 ISO			1.0	1.2	3.6
2.0	16	3/8	16V ER 2.0 ISO	16V EL 2.0 ISO			1.0	1.3	3.6
2.5	16	3/8	16V ER 2.5 ISO	16V EL 2.5 ISO			1.0	1.5	3.6
3.0	16	3/8	16V ER 3.0 ISO	16V EL 3.0 ISO			1.0	1.7	3.6
* 8.0	27	5/8	27V ER 8.0 ISO	27V EL 8.0 ISO	27V IR 8.0 ISO	27V IL 8.0 ISO	1.8	5.2	10.4
** 10.0	27	5/8	27V ER 10.0 ISO	27V EL 10.0 ISO	27V IR 10.0 ISO	27V IL 10.0 ISO	1.8	5.2	10.4

Order example: 16V ER 1.5 ISO BMA

* Minimum bore: Ø60 mm

** Minimum bore: Ø72 mm

Multitooth

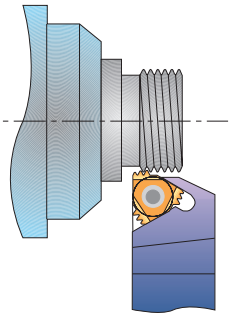

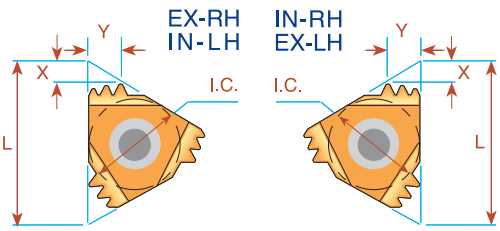

Pitch mm	L	I.C. in	Number of Teeth	EXTERNAL Ordering Code	Anvil	INTERNAL Ordering Code	Anvil	X	Y
1.0	16	3/8	3	16 ER 1.0 ISO 3M	AE16M	16 IR 1.0 ISO 3M	AI16M	1.7	2.5
1.5	16	3/8	2	16 ER 1.5 ISO 2M	AE16M	16 IR 1.5 ISO 2M	AI16M	1.5	2.3
2.0	16	3/8	2	16 ER 2.0 ISO 2M	AE16M	16 IR 2.0 ISO 2M	AI16M	2.0	3.0
1.5	22	1/2	3	22 ER 1.5 ISO 3M	AE22M	22 IR 1.5 ISO 3M	AI22M	2.3	3.7
2.0	22	1/2	2	22 ER 2.0 ISO 2M	AE22M	22 IR 2.0 ISO 2M	AI22M	2.0	3.0
2.0	22	1/2	3	22 ER 2.0 ISO 3M	AE22M	22 IR 2.0 ISO 3M	AI22M	3.1	5.0
2.5	22	1/2	2	22 ER 2.5 ISO 2M	AE22M	22 IR 2.5 ISO 2M	AI22M	2.4	3.7
2.5	22	1/2	3	22 ER 2.5 ISO 3M	AE22M	22 IR 2.5 ISO 3M	AI22M	3.8	6.2
3.0	27	5/8	2	27 ER 3.0 ISO 2M	AE27M	27 IR 3.0 ISO 2M	AI27M	2.9	4.6

Order example: 22 IR 2.0 ISO 2M BMA

For recommended number of passes see page A04-4

For carbide grade and cutting speed see page A04-2 and 3

UN - Unified UNC, UNF, UNEF, UNS

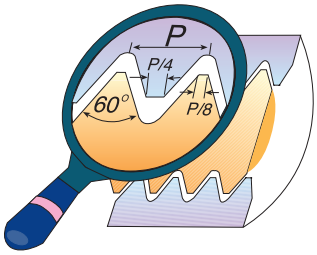

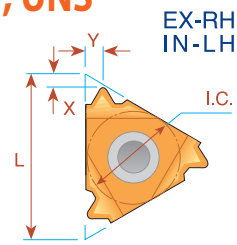

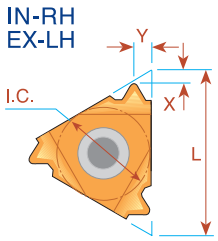

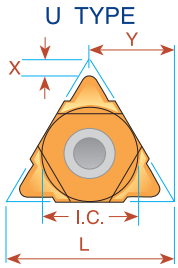

Pitch TPI	L	I.C. in	EXTERNAL Ordering Code Right Hand	EXTERNAL Ordering Code Left Hand	X	Y	INTERNAL Ordering Code Right Hand	INTERNAL Ordering Code Left Hand	X	Y
32	6	5/32					*06 IR 32 UN	*06 IL 32 UN	0.8	0.5
28	6	5/32					*06 IR 28 UN	*06 IL 28 UN	0.8	0.6
24	6	5/32	*ULTRA MINIATURE* →				*06 IR 24 UN	*06 IL 24 UN	0.7	0.6
20	6	5/32					*06 IR 20 UN	*06 IL 20 UN	0.6	0.6
18	6	5/32					*06 IR 18 UN	*06 IL 18 UN	0.6	0.7
32	8	3/16					*08 IR 32 UN	*08 IL 32 UN	0.6	0.5
28	8	3/16					*08 IR 28 UN	*08 IL 28 UN	0.6	0.6
24	8	3/16					*08 IR 24 UN	*08 IL 24 UN	0.6	0.6
20	8	3/16	*MINIATURE* →				*08 IR 20 UN	*08 IL 20 UN	0.6	0.7
18	8	3/16					*08 IR 18 UN	*08 IL 18 UN	0.6	0.7
16	8	3/16					*08 IR 16 UN	*08 IL 16 UN	0.6	0.7
14	8	3/16					*08 IR 14 UN	*08 IL 14 UN	0.6	0.8
13	8	3/16					**08 IR 13 UN		0.8	0.9
13	8U	3/16U					*08U IR/L 13 UN		1.0	4.0
12	8U	3/16U	*"U" MINIATURE* →				*08U IR/L 12 UN		0.9	4.0
11	8U	3/16U					*08U IR/L 11 UN		0.9	4.0
80	11	1/4	11 ER 80 UN	11 EL 80 UN	0.8	0.4	11 IR 80 UN	11 IL 80 UN	0.8	0.4
72	11	1/4	11 ER 72 UN	11 EL 72 UN	0.8	0.4	11 IR 72 UN	11 IL 72 UN	0.8	0.3
64	11	1/4	11 ER 64 UN	11 EL 64 UN	0.8	0.4	11 IR 64 UN	11 IL 64 UN	0.8	0.4
56	11	1/4	11 ER 56 UN	11 EL 56 UN	0.7	0.4	11 IR 56 UN	11 IL 56 UN	0.7	0.4
48	11	1/4	11 ER 48 UN	11 EL 48 UN	0.6	0.6	11 IR 48 UN	11 IL 48 UN	0.6	0.6
44	11	1/4	11 ER 44 UN	11 EL 44 UN	0.6	0.6	11 IR 44 UN	11 IL 44 UN	0.6	0.6
40	11	1/4	11 ER 40 UN	11 EL 40 UN	0.6	0.6	11 IR 40 UN	11 IL 40 UN	0.6	0.6
36	11	1/4	11 ER 36 UN	11 EL 36 UN	0.6	0.6	11 IR 36 UN	11 IL 36 UN	0.6	0.6
32	11	1/4	11 ER 32 UN	11 EL 32 UN	0.6	0.6	11 IR 32 UN	11 IL 32 UN	0.6	0.6
28	11	1/4	11 ER 28 UN	11 EL 28 UN	0.6	0.7	11 IR 28 UN	11 IL 28 UN	0.6	0.7
27	11	1/4	11 ER 27 UN	11 EL 27 UN	0.7	0.8	11 IR 27 UN	11 IL 27 UN	0.7	0.8
24	11	1/4	11 ER 24 UN	11 EL 24 UN	0.7	0.8	11 IR 24 UN	11 IL 24 UN	0.7	0.8
20	11	1/4	11 ER 20 UN	11 EL 20 UN	0.8	0.9	11 IR 20 UN	11 IL 20 UN	0.8	0.9
18	11	1/4	11 ER 18 UN	11 EL 18 UN	0.8	1.0	11 IR 18 UN	11 IL 18 UN	0.8	1.0
16	11	1/4	11 ER 16 UN	11 EL 16 UN	0.9	1.1	11 IR 16 UN	11 IL 16 UN	0.9	1.1
14	11	1/4	11 ER 14 UN	11 EL 14 UN	0.9	1.1	11 IR 14 UN	11 IL 14 UN	0.9	1.1
13	11	1/4					11 IR 13 UN	11 IL 13 UN	0.8	1.0
12	11	1/4					11 IR 12 UN	11 IL 12 UN	0.9	1.1
11	11	1/4					11 IR 11 UN	11 IL 11 UN	0.8	1.1
80	16	3/8	16 ER 80 UN	16 EL 80 UN	0.8	0.4	16 IR 80 UN	16 IL 80 UN	0.8	0.4
72	16	3/8	16 ER 72 UN	16 EL 72 UN	0.8	0.4	16 IR 72 UN	16 IL 72 UN	0.8	0.3
64	16	3/8	16 ER 64 UN	16 EL 64 UN	0.8	0.4	16 IR 64 UN	16 IL 64 UN	0.8	0.4
56	16	3/8	16 ER 56 UN	16 EL 56 UN	0.7	0.4	16 IR 56 UN	16 IL 56 UN	0.7	0.4
48	16	3/8	16 ER 48 UN	16 EL 48 UN	0.6	0.6	16 IR 48 UN	16 IL 48 UN	0.6	0.6
44	16	3/8	16 ER 44 UN	16 EL 44 UN	0.6	0.6	16 IR 44 UN	16 IL 44 UN	0.6	0.6
40	16	3/8	16 ER 40 UN	16 EL 40 UN	0.6	0.6	16 IR 40 UN	16 IL 40 UN	0.6	0.6
36	16	3/8	16 ER 36 UN	16 EL 36 UN	0.6	0.6	16 IR 36 UN	16 IL 36 UN	0.6	0.6

* Available only in BXC and BMA grades

** To be used with Holder SIR 0009 K08 on page A02-10

UN - Unified UNC, UNF, UNEF, UNS

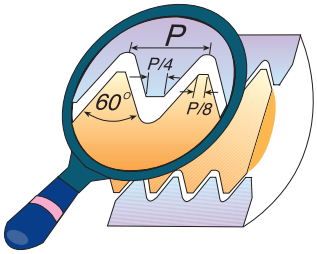

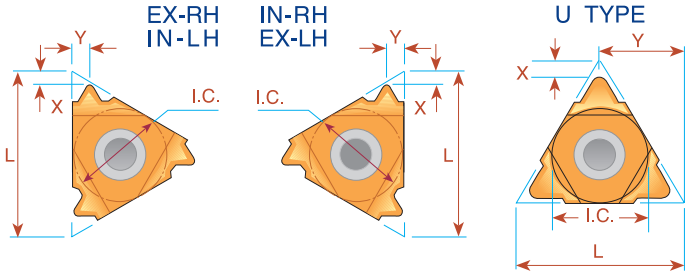

Pitch TPI	L	I.C. in	EXTERNAL Ordering Code Right Hand	EXTERNAL Ordering Code Left Hand	X	Y	INTERNAL Ordering Code Right Hand	INTERNAL Ordering Code Left Hand	X	Y
32	16	3/8	16 ER 32 UN	16 EL 32 UN	0.6	0.6	16 IR 32 UN	16 IL 32 UN	0.6	0.6
28	16	3/8	16 ER 28 UN	16 EL 28 UN	0.6	0.7	16 IR 28 UN	16 IL 28 UN	0.6	0.7
27	16	3/8	16 ER 27 UN	16 EL 27 UN	0.7	0.8	16 IR 27 UN	16 IL 27 UN	0.7	0.8
24	16	3/8	16 ER 24 UN	16 EL 24 UN	0.7	0.8	16 IR 24 UN	16 IL 24 UN	0.7	0.8
20	16	3/8	16 ER 20 UN	16 EL 20 UN	0.8	0.9	16 IR 20 UN	16 IL 20 UN	0.8	0.9
18	16	3/8	16 ER 18 UN	16 EL 18 UN	0.8	1.0	16 IR 18 UN	16 IL 18 UN	0.8	1.0
16	16	3/8	16 ER 16 UN	16 EL 16 UN	0.9	1.1	16 IR 16 UN	16 IL 16 UN	0.9	1.1
14	16	3/8	16 ER 14 UN	16 EL 14 UN	1.0	1.2	16 IR 14 UN	16 IL 14 UN	0.9	1.2
13	16	3/8	16 ER 13 UN	16 EL 13 UN	1.0	1.3	16 IR 13 UN	16 IL 13 UN	1.0	1.3
12	16	3/8	16 ER 12 UN	16 EL 12 UN	1.1	1.4	16 IR 12 UN	16 IL 12 UN	1.1	1.4
11.5	16	3/8	16 ER 11.5 UN	16 EL 11.5 UN	1.1	1.5	16 IR 11.5 UN	16 IL 11.5 UN	1.1	1.5
11	16	3/8	16 ER 11 UN	16 EL 11 UN	1.1	1.5	16 IR 11 UN	16 IL 11 UN	1.1	1.5
10	16	3/8	16 ER 10 UN	16 EL 10 UN	1.1	1.5	16 IR 10 UN	16 IL 10 UN	1.1	1.5
9	16	3/8	16 ER 9 UN	16 EL 9 UN	1.2	1.7	16 IR 9 UN	16 IL 9 UN	1.2	1.7
8	16	3/8	16 ER 8 UN	16 EL 8 UN	1.2	1.6	16 IR 8 UN	16 IL 8 UN	1.1	1.5
7	22	1/2	22 ER 7 UN	22 EL 7 UN	1.6	2.3	22 IR 7 UN	22 IL 7 UN	1.6	2.3
6	22	1/2	22 ER 6 UN	22 EL 6 UN	1.6	2.3	22 IR 6 UN	22 IL 6 UN	1.6	2.3
5	22	1/2	22 ER 5 UN	22 EL 5 UN	1.7	2.5	22 IR 5 UN	22 IL 5 UN	1.6	2.3
4.5	22U	1/2U	22U ER/L 4.5 UN		2.0	11.0	22U IR/L 4.5 UN		2.4	11.0
4	22U	1/2U	22U ER/L 4 UN		2.0	11.0	22U IR/L 4 UN		2.4	11.0
4.5	27	5/8	27 ER 4.5 UN	27 EL 4.5 UN	1.9	2.7	27 IR 4.5 UN	27 IL 4.5 UN	1.7	2.4
4	27	5/8	27 ER 4 UN	27 EL 4 UN	2.1	3.0	27 IR 4 UN	27 IL 4 UN	1.8	2.7
3	27U	5/8U	27U ER/L 3 UN		2.5	13.7	27U IR/L 3 UN		2.7	13.7
2	33U	3/4U	33U ER/L 2 UN		2.8	16.5	33U IR/L 2 UN		3.6	16.9

Order example: 22 ER 7 UN BMA

For small bore threading see page A06-13

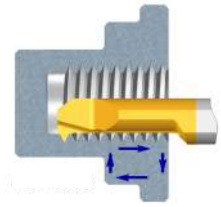

For carbide grade and cutting speed see page A04-2 and 3

UN - Unified
Vertical

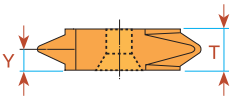

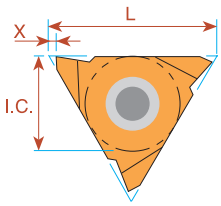

Pitch TPI	L	I.C. in	EXTERNAL Ordering Code Right Hand	EXTERNAL Ordering Code Left Hand	INTERNAL Ordering Code Right Hand	INTERNAL Ordering Code Left Hand	X	Y	T
32	16	3/8	16V ER 32 UN	16V EL 32 UN			1.0	0.6	3.6
28	16	3/8	16V ER 28 UN	16V EL 28 UN			1.0	0.7	3.6
24	16	3/8	16V ER 24 UN	16V EL 24 UN			1.0	0.8	3.6
20	16	3/8	16V ER 20 UN	16V EL 20 UN			1.0	0.9	3.6
18	16	3/8	16V ER 18 UN	16V EL 18 UN			1.0	1.0	3.6
16	16	3/8	16V ER 16 UN	16V EL 16 UN			1.0	1.1	3.6
14	16	3/8	16V ER 14 UN	16V EL 14 UN			1.0	1.2	3.6
12	16	3/8	16V ER 12 UN	16V EL 12 UN			1.0	1.4	3.6
10	16	3/8	16V ER 10 UN	16V EL 10 UN			1.0	1.5	3.6
8	16	3/8	16V ER 8 UN	16V EL 8 UN			1.0	1.6	3.6
7	22	1/2	22V ER 7 UN	22V EL 7 UN			1.2	2.3	4.8
* 3	27	5/8	27V ER 3 UN	27V EL 3 UN	27V IR 3 UN	27V IL 3 UN	1.8	5.2	10.4

* Minimum bore: Ø65 mm
Order example: 22V ER 7 UN MXC

UN - Unified UNC, UNF, UNEF, UNS
Type B

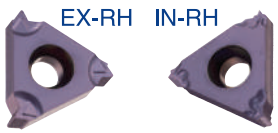

Ground profile with sintered chip-breaker

Pitch TPI	L	I.C. in	EXTERNAL Ordering Code Right Hand	X	Y	INTERNAL Ordering Code Right Hand	X	Y
32	11	1/4				11 IR B 32 UN	0.6	0.6
28	11	1/4				11 IR B 28 UN	0.6	0.6
24	11	1/4				11 IR B 24 UN	0.6	0.6
20	11	1/4				11 IR B 20 UN	0.8	0.9
18	11	1/4				11 IR B 18 UN	0.8	0.9
16	11	1/4				11 IR B 16 UN	0.8	0.9
14	11	1/4				11 IR B 14 UN	0.8	0.9
12	11	1/4				11 IR B 12 UN	0.8	0.9
24	16	3/8	16 ER B 24 UN	0.7	0.8	16 IR B 24 UN	0.7	0.8
20	16	3/8	16 ER B 20 UN	0.8	0.9	16 IR B 20 UN	0.8	0.9
18	16	3/8	16 ER B 18 UN	0.8	1.0	16 IR B 18 UN	0.8	1.0
16	16	3/8	16 ER B 16 UN	0.9	1.1	16 IR B 16 UN	0.9	1.1
14	16	3/8	16 ER B 14 UN	1.0	1.2	16 IR B 14 UN	0.9	1.2
13	16	3/8	16 ER B 13 UN	1.0	1.3			
12	16	3/8	16 ER B 12 UN	1.1	1.4	16 IR B 12 UN	1.1	1.4
11	16	3/8	16 ER B 11 UN	1.1	1.5			
10	16	3/8	16 ER B 10 UN	1.1	1.5	16 IR B 10 UN	1.1	1.5
9	16	3/8	16 ER B 9 UN	1.2	1.7			
8	16	3/8	16 ER B 8 UN	1.2	1.6	16 IR B 8 UN	1.1	1.1

Order example: 16 IR B 12 UN BMA

Multitooth

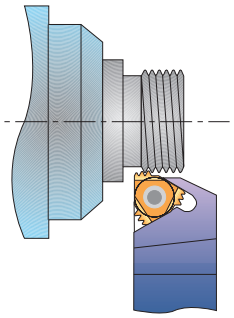

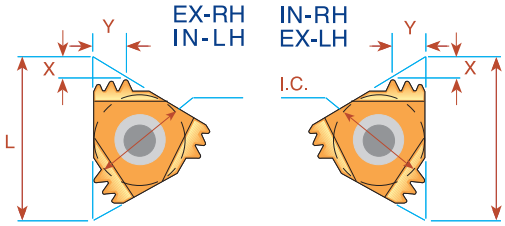

Pitch TPI	L	I.C. in	Number of Teeth	EXTERNAL Ordering Code	Anvil	INTERNAL Ordering Code	Anvil	X	Y
24	16	3/8	2	**16 ER 24 UN 2M**	AE16M	**16 IR 24 UN 2M**	AI16M	1.1	1.7
20	16	3/8	2	**16 ER 20 UN 2M**	AE16M	**16 IR 20 UN 2M**	AI16M	1.4	2.0
18	16	3/8	2	**16 ER 18 UN 2M**	AE16M	**16 IR 18 UN 2M**	AI16M	1.5	2.2
16	16	3/8	2	**16 ER 16 UN 2M**	AE16M	**16 IR 16 UN 2M**	AI16M	1.5	2.3
14	16	3/8	2	**16 ER 14 UN 2M**	AE16M	**16 IR 14 UN 2M**	AI16M	1.7	2.7
12	16	3/8	2	**16 ER 12 UN 2M**	AE16M	**16 IR 12 UN 2M**	AI16M	2.0	3.1
16	22	1/2	3	**22 ER 16 UN 3M**	AE22M	**22 IR 16 UN 3M**	AI22M	2.5	4.0
13	22	1/2	3	**22 ER 13 UN 3M**	AE22M	-		3.0	4.9
12	22	1/2	2	**22 ER 12 UN 2M**	AE22M	**22 IR 12 UN 2M**	AI22M	2.2	3.4
12	22	1/2	3	**22 ER 12 UN 3M**	AE22M	**22 IR 12 UN 3M**	AI22M	3.3	5.3
8	27	5/8	2	**27 ER 8 UN 2M**	AE27M	**27 IR 8 UN 2M**	AI27M	3.1	4.9

Order example: 22 IR 16 UN 3M BMA

For recommended number of passes see page A04-4

For carbide grade and cutting speed see page A04-2 and 3

Whitworth - 55° BSW, BSF, BSP, BSB

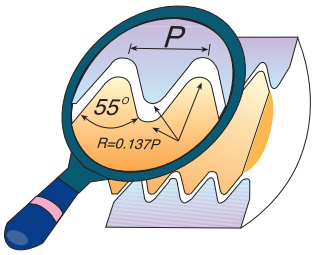

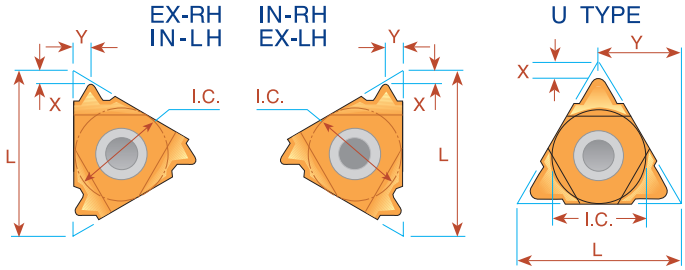

Pitch TPI	L	I.C. in	EXTERNAL Ordering Code Right Hand	EXTERNAL Ordering Code Left Hand	INTERNAL Ordering Code Right Hand	INTERNAL Ordering Code Left Hand	X	Y
26	6	5/32			*06 IR 26 W	*06 IL 26 W	0.7	0.6
22	6	5/32	*ULTRA MINIATURE* →		*06 IR 22 W	*06 IL 22 W	0.6	0.6
20	6	5/32			*06 IR 20 W	*06 IL 20 W	0.6	0.7
18	6	5/32			*06 IR 18 W	*06 IL 18 W	0.6	0.7
28	8	3/16			*08 IR 28 W	*08 IL 28 W	0.6	0.6
24	8	3/16			*08 IR 24 W	*08 IL 24 W	0.6	0.6
20	8	3/16			*08 IR 20 W	*08 IL 20 W	0.6	0.7
19	8	3/16	*MINIATURE* →		*08 IR 19 W	*08 IL 19 W	0.6	0.7
18	8	3/16			*08 IR 18 W	*08 IL 18 W	0.6	0.7
16	8	3/16			*08 IR 16 W	*08 IL 16 W	0.6	0.7
14	8U	3/16U			*08U IR/L 14 W		1.0	4.0
12	8U	3/16U	*"U" MINIATURE* →		*08U IR/L 12 W		0.9	4.0
11	8U	3/16U			*08U IR/L 11 W		0.9	4.0
72	11	1/4	11 ER 72 W	11 EL 72 W	11 IR 72 W	11 IL 72 W	0.7	0.4
60	11	1/4	11 ER 60 W	11 EL 60 W	11 IR 60 W	11 IL 60 W	0.7	0.4
56	11	1/4	11 ER 56 W	11 EL 56 W	11 IR 56 W	11 IL 56 W	0.7	0.4
48	11	1/4	11 ER 48 W	11 EL 48 W	11 IR 48 W	11 IL 48 W	0.6	0.6
40	11	1/4	11 ER 40 W	11 EL 40 W	11 IR 40 W	11 IL 40 W	0.6	0.6
36	11	1/4	11 ER 36 W	11 EL 36 W	11 IR 36 W	11 IL 36 W	0.6	0.6
32	11	1/4	11 ER 32 W	11 EL 32 W	11 IR 32 W	11 IL 32 W	0.6	0.6
28	11	1/4	11 ER 28 W	11 EL 28 W	11 IR 28 W	11 IL 28 W	0.6	0.7
26	11	1/4	11 ER 26 W	11 EL 26 W	11 IR 26 W	11 IL 26 W	0.7	0.7
24	11	1/4	11 ER 24 W	11 EL 24 W	11 IR 24 W	11 IL 24 W	0.7	0.8
22	11	1/4	11 ER 22 W	11 EL 22 W	11 IR 22 W	11 IL 22 W	0.8	0.9
20	11	1/4	11 ER 20 W	11 EL 20 W	11 IR 20 W	11 IL 20 W	0.8	0.9
19	11	1/4	11 ER 19 W	11 EL 19 W	11 IR 19 W	11 IL 19 W	0.8	1.0
18	11	1/4	11 ER 18 W	11 EL 18 W	11 IR 18 W	11 IL 18 W	0.8	1.0
16	11	1/4	11 ER 16 W	11 EL 16 W	11 IR 16 W	11 IL 16 W	0.9	1.1
14	11	1/4	11 ER 14 W	11 EL 14 W	11 IR 14 W	11 IL 14 W	0.9	1.1
12	11	1/4			11 IR 12 W	11 IL 12 W	0.1	1.1
11	11	1/4			(1) 11 IR 11 W	(1) 11 IL 11 W	0.9	1.2
72	16	3/8	16 ER 72 W	16 EL 72 W	16 IR 72 W	16 IL 72 W	0.7	0.4
60	16	3/8	16 ER 60 W	16 EL 60 W	16 IR 60 W	16 IL 60 W	0.7	0.4
56	16	3/8	16 ER 56 W	16 EL 56 W	16 IR 56 W	16 IL 56 W	0.7	0.4
48	16	3/8	16 ER 48 W	16 EL 48 W	16 IR 48 W	16 IL 48 W	0.6	0.6
40	16	3/8	16 ER 40 W	16 EL 40 W	16 IR 40 W	16 IL 40 W	0.6	0.6
36	16	3/8	16 ER 36 W	16 EL 36 W	16 IR 36 W	16 IL 36 W	0.6	0.6
32	16	3/8	16 ER 32 W	16 EL 32 W	16 IR 32 W	16 IL 32 W	0.6	0.6
28	16	3/8	16 ER 28 W	16 EL 28 W	16 IR 28 W	16 IL 28 W	0.6	0.7
26	16	3/8	16 ER 26 W	16 EL 26 W	16 IR 26 W	16 IL 26 W	0.7	0.7
24	16	3/8	16 ER 24 W	16 EL 24 W	16 IR 24 W	16 IL 24 W	0.7	0.8

* Available only in BXC and BMA grades

(1) Special holder is required or standard holder can be amended by customer.

Whitworth - 55° BSW, BSF, BSP, BSB

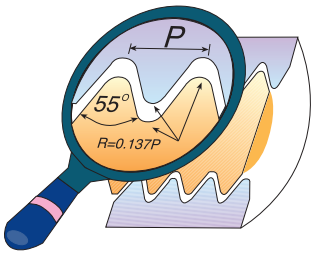

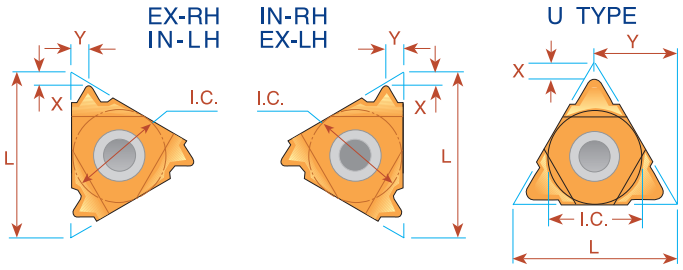

Pitch TPI	L	I.C. in	EXTERNAL Ordering Code Right Hand	EXTERNAL Ordering Code Left Hand	INTERNAL Ordering Code Right Hand	INTERNAL Ordering Code Left Hand	X	Y
22	16	3/8	16 ER 22 W	16 EL 22 W	16 IR 22 W	16 IL 22 W	0.8	0.9
20	16	3/8	16 ER 20 W	16 EL 20 W	16 IR 20 W	16 IL 20 W	0.8	0.9
19	16	3/8	16 ER 19 W	16 EL 19 W	16 IR 19 W	16 IL 19 W	0.8	1.0
18	16	3/8	16 ER 18 W	16 EL 18 W	16 IR 18 W	16 IL 18 W	0.8	1.0
16	16	3/8	16 ER 16 W	16 EL 16 W	16 IR 16 W	16 IL 16 W	0.9	1.1
14	16	3/8	16 ER 14 W	16 EL 14 W	16 IR 14 W	16 IL 14 W	1.0	1.2
12	16	3/8	16 ER 12 W	16 EL 12 W	16 IR 12 W	16 IL 12 W	1.1	1.4
11	16	3/8	16 ER 11 W	16 EL 11 W	16 IR 11 W	16 IL 11 W	1.1	1.5
10	16	3/8	16 ER 10 W	16 EL 10 W	16 IR 10 W	16 IL 10 W	1.1	1.5
9	16	3/8	16 ER 9 W	16 EL 9 W	16 IR 9 W	16 IL 9 W	1.2	1.7
8	16	3/8	16 ER 8 W	16 EL 8 W	16 IR 8 W	16 IL 8 W	1.2	1.5
7	22	1/2	22 ER 7 W	22 EL 7 W	22 IR 7 W	22 IL 7 W	1.6	2.3
6	22	1/2	22 ER 6 W	22 EL 6 W	22 IR 6 W	22 IL 6 W	1.6	2.3
5	22	1/2	22 ER 5 W	22 EL 5 W	22 IR 5 W	22 IL 5 W	1.7	2.4
4.5	22U	1/2U	22U E/I/R/L 4.5 W				2.3	11.0
4	22U	1/2U	22U E/I/R/L 4 W				2.8	11.0
4.5	27	5/8	27 ER 4.5 W	27 EL 4.5 W	27 IR 4.5 W	27 IL 4.5 W	1.8	2.6
4	27	5/8	27 ER 4 W	27 EL 4 W	27 IR 4 W	27 IL 4 W	2.0	2.9
3.5	27U	5/8U	27U E/I/R/L 3.5 W				2.1	13.7
3.25	27U	5/8U	27U E/I/R/L 3.25 W				2.0	13.7
3	27U	5/8U	27U E/I/R/L 3 W				2.3	13.7
2.75	27U	5/8U	27U E/I/R/L 2.75 W				2.4	13.7
*2.625	27U	5/8U	27U E/I/R/L 2.625 W				2.5	13.7
*2.5	27U	5/8U	27U E/I/R/L 2.5 W				2.8	13.7

* One cutting edge

Order example: 16 IR 18 W BMA

For carbide grade and cutting speed see page A04-2 and 3

Whitworth - 55° BSW, BSF, BSP, BSB

Type B

Ground profile with sintered chip-breaker

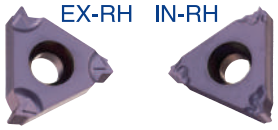

Pitch TPI	L	I.C. in	EXTERNAL Ordering Code Right Hand	INTERNAL Ordering Code Right Hand	X	Y
28	11	1/4		11 IR B 28 W	0.6	0.6
24	11	1/4		11 IR B 24 W	0.6	0.6
20	11	1/4		11 IR B 20 W	0.8	0.9
19	11	1/4		11 IR B 19 W	0.8	0.9
18	11	1/4		11 IR B 18 W	0.8	0.9
16	11	1/4		11 IR B 16 W	0.8	0.9
14	11	1/4		11 IR B 14 W	0.8	0.9
19	16	3/8	16 ER B 19 W	16 IR B 19 W	0.8	1.0
16	16	3/8	16 ER B 16 W	16 IR B 16 W	0.9	1.1
14	16	3/8	16 ER B 14 W	16 IR B 14 W	1.0	1.2
11	16	3/8	16 ER B 11 W	16 IR B 11 W	1.1	1.5
10	16	3/8	16 ER B 10 W	16 IR B 10 W	1.1	1.5

Order example: 16 IR B 10 W BMA

Vertical

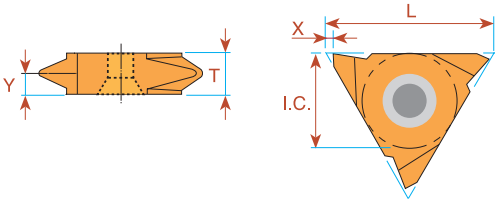

Pitch TPI	L	I.C. in	EXTERNAL Ordering Code Right Hand	EXTERNAL Ordering Code Left Hand	X	Y	T
20	16	3/8	16V ER 20 W	16V EL 20 W	1.0	0.9	3.6
19	16	3/8	16V ER 19 W	16V EL 19 W	1.0	0.9	3.6
18	16	3/8	16V ER 18 W	16V EL 18 W	1.0	1.0	3.6
16	16	3/8	16V ER 16 W	16V EL 16 W	1.0	1.0	3.6
14	16	3/8	16V ER 14 W	16V EL 14 W	1.0	1.2	3.6
12	16	3/8	16V ER 12 W	16V EL 12 W	1.0	1.4	3.6
11	16	3/8	16V ER 11 W	16V EL 11 W	1.0	1.5	3.6

Order example: 16V ER 14 W MXC

Multitooth

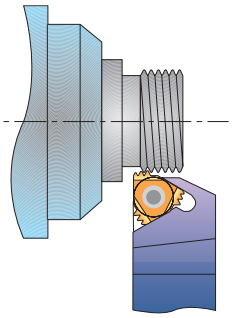

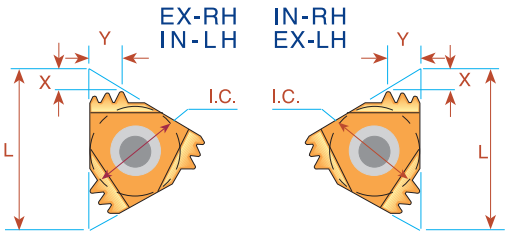

Pitch TPI	L	I.C. in	Number of Teeth	EXTERNAL Ordering Code	Anvil	INTERNAL Ordering Code	Anvil	X	Y
14	16	3/8	2	**16 ER 14 W 2M**	AE16M	**16 IR 14 W 2M**	AI16M	1.7	2.7
11	16	3/8	2	**16 ER 11 W 2M**	AE16M	**16 IR 11 W 2M**	AI16M	2.1	3.4
14	22	1/2	3	**22 ER 14 W 3M**	AE22M	**22 IR 14 W 3M**	AI22M	2.8	4.5
11	22	1/2	2	**22 ER 11 W 2M**	AE22M	**22 IR 11 W 2M**	AI22M	2.1	3.4

Order example: 16 ER 14 W 2M MXC

For recommended number of passes see page A04-4

For carbide grade and cutting speed see page A04-2 and 3

NPT

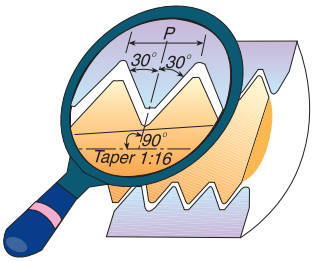

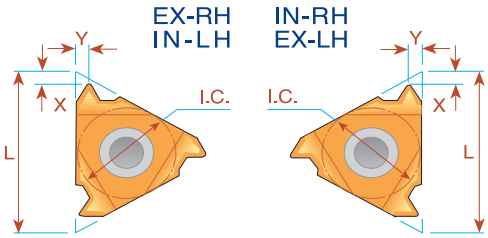

Pitch TPI	L	I.C. in	EXTERNAL Ordering Code Right Hand	EXTERNAL Ordering Code Left Hand	INTERNAL Ordering Code Right Hand	INTERNAL Ordering Code Left Hand	X	Y
27	6	5/32	*ULTRA MINIATURE* →		*06 IR 27 NPT	*06 IL 27 NPT	0.6	0.6
27	8	3/16			*08 IR 27 NPT	*08 IL 27 NPT	0.6	0.6
18	8	3/16	*MINIATURE* →		*08 IR 18 NPT	*08 IL 18 NPT	0.6	0.6
27	11	1/4	11 ER 27 NPT	11 EL 27 NPT	11 IR 27 NPT	11 IL 27 NPT	0.7	0.8
18	11	1/4	11 ER 18 NPT	11 EL 18 NPT	11 IR 18 NPT	11 IL 18 NPT	0.8	1.0
14	11	1/4	11 ER 14 NPT	11 EL 14 NPT	11 IR 14 NPT	11 IL 14 NPT	0.8	1.0
27	16	3/8	16 ER 27 NPT	16 EL 27 NPT	16 IR 27 NPT	16 IL 27 NPT	0.7	0.8
18	16	3/8	16 ER 18 NPT	16 EL 18 NPT	16 IR 18 NPT	16 IL 18 NPT	0.8	1.0
14	16	3/8	16 ER 14 NPT	16 EL 14 NPT	16 IR 14 NPT	16 IL 14 NPT	0.9	1.2
11.5	16	3/8	16 ER 11.5 NPT	16 EL 11.5 NPT	16 IR 11.5 NPT	16 IL 11.5 NPT	1.1	1.5
8	16	3/8	16 ER 8 NPT	16 EL 8 NPT	16 IR 8 NPT	16 IL 8 NPT	1.3	1.8

* Available only in BXC and BMA grades

Order example: 16 ER 14 NPT MXC

For small bore threading see page A06-16

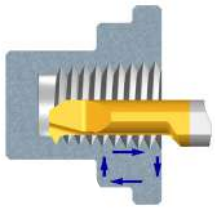

Type B

Ground profile with sintered chip-breaker

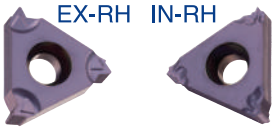

Pitch TPI	L	I.C. in	EXTERNAL Ordering Code Right Hand	INTERNAL Ordering Code Right Hand	X	Y
18	11	1/4		11 IR B 18 NPT	0.8	0.9
18	16	3/8	16 ER B 18 NPT	16 IR B 18 NPT	0.8	1.0
14	16	3/8	16 ER B 14 NPT	16 IR B 14 NPT	0.9	1.2
11.5	16	3/8	16 ER B 11.5 NPT	16 IR B 11.5 NPT	1.1	1.5
8	16	3/8	16 ER B 8 NPT	16 IR B 8 NPT	1.3	1.8

Order example: 16 IR B 11.5 NPT BMA

For carbide grade and cutting speed see page A04-2 and 3

NPT
Multitooth

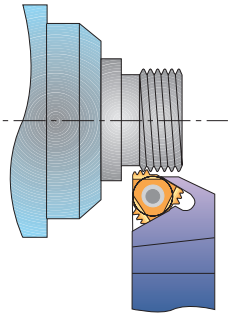

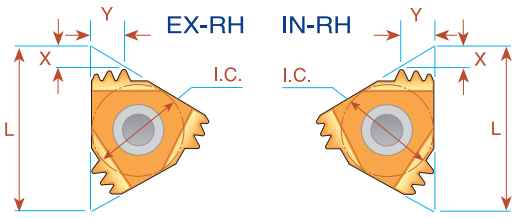

Pitch TPI	L	I.C. in	Number of Teeth	EXTERNAL Ordering Code	Anvil	INTERNAL Ordering Code	Anvil	X	Y
14	16	3/8	2	**16 ER 14 NPT 2M**	AE16M	**16 IR 14 NPT 2M**	AI16M	1.7	2.8
11.5	22	1/2	2	**22 ER 11.5 NPT 2M**	AE22M	**22 IR 11.5 NPT 2M**	AI22M	2.3	3.5
11.5	27	5/8	3	**27 ER 11.5 NPT 3M**	AE27M	**27 IR 11.5 NPT 3M**	AI27M	3.3	5.5
8	27	5/8	2	**27 ER 8 NPT 2M**	AE27M	**27 IR 8 NPT 2M**	AI27M	3.1	5.0

Order example: 22 ER 11.5 NPT 2M MXC

For recommended number of passes see page A04-4

NPT
Vertical

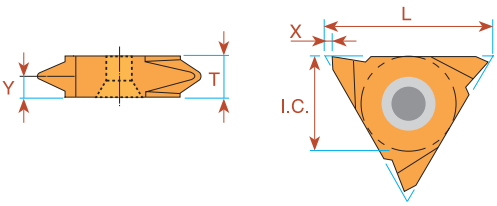

Pitch TPI	L	I.C. in	EXTERNAL Ordering Code Right Hand	EXTERNAL Ordering Code Left Hand	X	Y	T
27	16	3/8	**16V ER 27 NPT**	**16V EL 27 NPT**	1.0	0.8	3.6
18	16	3/8	**16V ER 18 NPT**	**16V EL 18 NPT**	1.0	1.0	3.6
14	16	3/8	**16V ER 14 NPT**	**16V EL 14 NPT**	1.0	1.2	3.6
11.5	16	3/8	**16V ER 11.5 NPT**	**16V EL 11.5 NPT**	1.0	1.5	3.6

Order example: 16V ER 14 NPT BMA

For carbide grade and cutting speed see page A04-2 and 3

NPTF - Dryseal

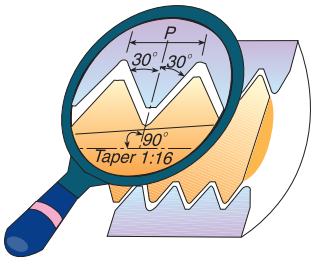

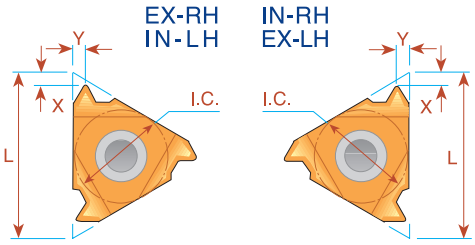

Pitch TPI	L	I.C. in	EXTERNAL Ordering Code Right Hand	EXTERNAL Ordering Code Left Hand	INTERNAL Ordering Code Right Hand	INTERNAL Ordering Code Left Hand	X	Y
27	6	5/32	ULTRA MINIATURE →		*06 IR 27 NPTF	*06 IL 27 NPTF	0.7	0.6
27	8	3/16			*08 IR 27 NPTF	*08 IL 27 NPTF	0.6	0.6
18	8	3/16	MINIATURE →		*08 IR 18 NPTF	*08 IL 18 NPTF	0.6	0.6
27	11	1/4	11 ER 27 NPTF	11 EL 27 NPTF	11 IR 27 NPTF	11 IL 27 NPTF	0.7	0.7
18	11	1/4	11 ER 18 NPTF	11 EL 18 NPTF	11 IR 18 NPTF	11 IL 18 NPTF	0.8	1.0
14	11	1/4	11 ER 14 NPTF	11 EL 14 NPTF	11 IR 14 NPTF	11 IL 14 NPTF	0.8	1.0
27	16	3/8	16 ER 27 NPTF	16 EL 27 NPTF	16 IR 27 NPTF	16 IL 27 NPTF	0.7	0.7
18	16	3/8	16 ER 18 NPTF	16 EL 18 NPTF	16 IR 18 NPTF	16 IL 18 NPTF	0.8	1.0
14	16	3/8	16 ER 14 NPTF	16 EL 14 NPTF	16 IR 14 NPTF	16 IL 14 NPTF	0.9	1.2
11.5	16	3/8	16 ER 11.5 NPTF	16 EL 11.5 NPTF	16 IR 11.5 NPTF	16 IL 11.5 NPTF	1.1	1.5
8	16	3/8	16 ER 8 NPTF	16 EL 8 NPTF	16 IR 8 NPTF	16 IL 8 NPTF	1.3	1.8

* Available only in BXC and BMA grades

Order example: 11 ER 27 NPTF MXC

Type B

Ground profile with sintered chip-breaker

Pitch TPI	L	I.C. in	INTERNAL Ordering Code Right Hand	X	Y
18	11	1/4	11 IR B 18 NPTF	0.8	0.9

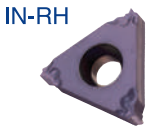

Order example: 11 IR B 18 NPTF BMA

Multitooth

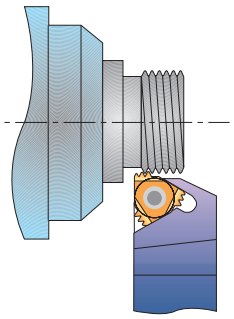

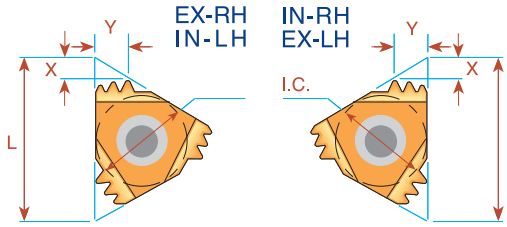

Pitch TPI	L	I.C. in	Number of Teeth	EXTERNAL Ordering Code	Anvil	INTERNAL Ordering Code	Anvil	X	Y
11.5	22	1/2	2	22 ER 11.5 NPTF 2M	AE22M	22 IR 11.5 NPTF 2M	AI22M	2.3	3.5

Order example: 22 ER 11.5 NPTF 2M BMA

For carbide grade and cutting speed see page A04-2 and 3

BSPT

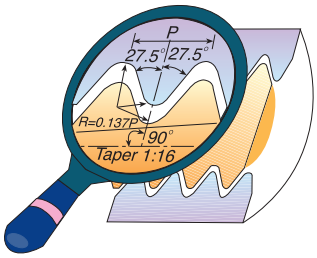

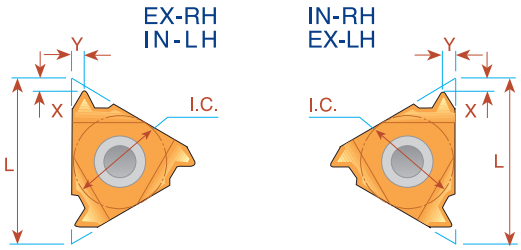

Pitch TPI	L	I.C. in	EXTERNAL Ordering Code Right Hand	EXTERNAL Ordering Code Left Hand	INTERNAL Ordering Code Right Hand	INTERNAL Ordering Code Left Hand	X	Y
28	6	5/32	*ULTRA MINIATURE* →		*06 IR 28 BSPT	*06 IL 28 BSPT	0.7	0.6
28	8	3/16			*08 IR 28 BSPT	*08 IL 28 BSPT	0.6	0.6
19	8	3/16	*MINIATURE* →		*08 IR 19 BSPT	*08 IL 19 BSPT	0.6	0.6
28	11	1/4			11 IR 28 BSPT	11 IL 28 BSPT	0.6	0.6
19	11	1/4			11 IR 19 BSPT	11 IL 19 BSPT	0.8	0.9
14	11	1/4			11 IR 14 BSPT	11 IL 14 BSPT	0.9	1.0
11	11	1/4			(1) 11 IR 11 BSPT	(1) 11 IL 11 BSPT	0.9	1.2
28	16	3/8	16 ER 28 BSPT	16 EL 28 BSPT	16 IR 28 BSPT	16 IL 28 BSPT	0.6	0.6
19	16	3/8	16 ER 19 BSPT	16 EL 19 BSPT	16 IR 19 BSPT	16 IL 19 BSPT	0.8	0.9
14	16	3/8	16 ER 14 BSPT	16 EL 14 BSPT	16 IR 14 BSPT	16 IL 14 BSPT	1.0	1.2
11	16	3/8	16 ER 11 BSPT	16 EL 11 BSPT	16 IR 11 BSPT	16 IL 11 BSPT	1.1	1.5

* Available only in BXC and BMA grades

Order example: 11 IR 14 BSPT BMA

(1) Special holder is required or standard holder can be amended by customer.

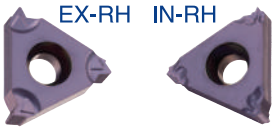

Type B

Ground profile with sintered chip-breaker

Pitch TPI	L	I.C. in	EXTERNAL Ordering Code Right Hand	INTERNAL Ordering Code Right Hand	X	Y
19	11	1/4		11 IR B 19 BSPT	0.8	0.9
19	16	3/8	16 ER B 19 BSPT		1.0	1.1
14	16	3/8	16 ER B 14 BSPT	16 IR B 14 BSPT	1.2	1.0
11	16	3/8	16 ER B 11 BSPT	16 IR B 11 BSPT	1.5	1.1

Order example: 16 ER B 11 BSPT BMA

For carbide grade and cutting speed see page A04-2 and 3

BSPT
Vertical

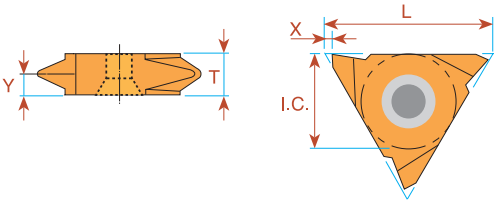

Pitch TPI	L	I.C. in	EXTERNAL Ordering Code Right Hand	EXTERNAL Ordering Code Left Hand	X	Y	T
28	16	3/8	**16V ER 28 BSPT**	**16V EL 28 BSPT**	1.0	0.6	3.6
19	16	3/8	**16V ER 19 BSPT**	**16V EL 19 BSPT**	1.0	0.9	3.6
14	16	3/8	**16V ER 14 BSPT**	**16V EL 14 BSPT**	1.0	1.2	3.6
11	16	3/8	**16V ER 11 BSPT**	**16V EL 11 BSPT**	1.0	1.5	3.6

Order example: 16V ER 19 BSPT BMA

DIN 477

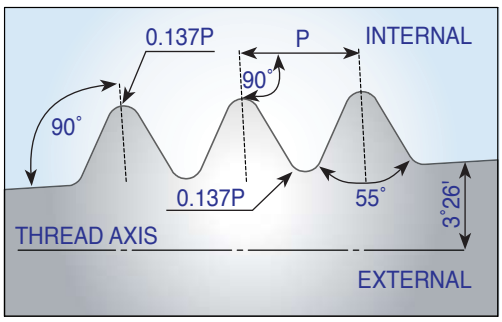

Pitch TPI	L	I.C. in	Taper Ratio	EXTERNAL Ordering Code Right Hand	INTERNAL Ordering Code Right Hand	X	Y	Thread Designation
14	16	3/8	3/25	**16 ER 14 DIN477**		1.0	1.2	W19.8x1/14 keg(Ext.)
14	11	1/4	3/25	———	*11 IR 14 DIN477	0.9	1.0	W19.8x1/14 keg(Int.)
14	16	3/8	3/25	**16 ER 14 DIN477**	**16 IR 14 DIN477	1.0	1.2	W28.8x1/14 keg
14	16	3/8	3/25	**16 ER 14 DIN477**	***16 IR 14 DIN477	1.0	1.2	W31.3x1/14 keg

* Holder to use: SIR0010H11/SIR0010K11
** Holder to use: SIR0016P16
*** Holder to use: SIR0020P16

Order example: 16 IR 14 DIN477 BMA

For carbide grade and cutting speed see page A04-2 and 3

Acme

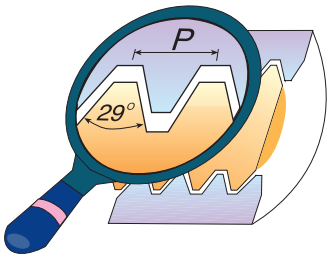

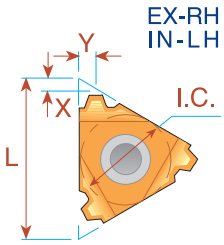

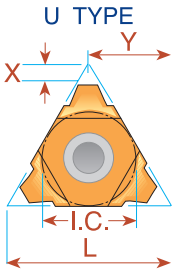

Pitch TPI	L	I.C. in	EXTERNAL Ordering Code Right Hand	EXTERNAL Ordering Code Left Hand	INTERNAL Ordering Code Right Hand	INTERNAL Ordering Code Left Hand	X	Y
16	8	3/16	*MINIATURE* →		**08 IR 16 ACME	**08 IL 16 ACME	0.6	0.6
14	8U	3/16U	*"U" MINIATURE* →		*08U IR/L 14 ACME		0.8	4.0
12	8U	3/16U			*08U IR/L 12 ACME		0.8	4.0
10	8U	3/16U			*08U IR/L 10 ACME		0.8	4.0
16	11	1/4	11 ER 16 ACME	11 EL 16 ACME	11 IR 16 ACME	11 IL 16 ACME	0.9	1.0
16	16	3/8	16 ER 16 ACME	16 EL 16 ACME	16 IR 16 ACME	16 IL 16 ACME	0.9	1.0
14	16	3/8	16 ER 14 ACME	16 EL 14 ACME	16 IR 14 ACME	16 IL 14 ACME	1.0	1.2
12	16	3/8	16 ER 12 ACME	16 EL 12 ACME	16 IR 12 ACME	16 IL 12 ACME	1.1	1.2
10	16	3/8	16 ER 10 ACME	16 EL 10 ACME	16 IR 10 ACME	16 IL 10 ACME	1.3	1.3
8	16	3/8	16 ER 8 ACME	16 EL 8 ACME	16 IR 8 ACME	16 IL 8 ACME	1.5	1.5
6	16	3/8	(1) 16 ER 6 ACME	(1) 16 EL 6 ACME	(1) 16 IR 6 ACME	(1) 16 IL 6 ACME	1.7	1.8
6	22	1/2	22 ER 6 ACME	22 EL 6 ACME	22 IR 6 ACME	22 IL 6 ACME	1.8	2.1
5	22	1/2	22 ER 5 ACME	22 EL 5 ACME	22 IR 5 ACME	22 IL 5 ACME	2.0	2.3
4	22	1/2	(1) 22 ER 4 ACME	(1) 22 EL 4 ACME	(1) 22 IR 4 ACME	(1) 22 IL 4 ACME	2.1	2.2
4	22U	1/2U	22U ER/L 4 ACME		22U IR/L 4 ACME		2.3	11.0
4	27	5/8	27 ER 4 ACME	27 EL 4 ACME	27 IR 4 ACME	27 IL 4 ACME	2.3	2.7
3	27U	5/8U	27U ER/L 3 ACME		27U IR/L 3 ACME		2.8	13.7
2	33U	3/4U	33U ER/L 2 ACME		33U IR/L 2 ACME		4.3	16.9

* Available only in BXC and BMA grades
** One cutting edge
Order example: 16 ER 16 ACME MXC
(1) Special holder is required or standard holder can be amended by customer.

Acme Vertical

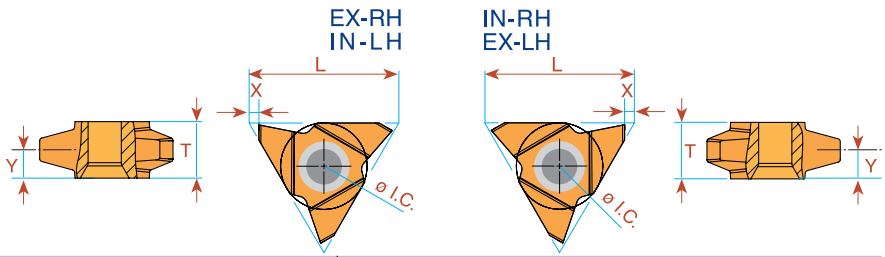

Pitch TPI	L	I.C. in	EXTERNAL Ordering Code Right Hand	EXTERNAL Ordering Code Left Hand	X	Y	T	INTERNAL Ordering Code Right Hand	INTERNAL Ordering Code Left Hand	X	Y	T
* 3.5	27	5/8	27V ER 3.5 ACME	———	1.8	5.0	10.4	27V IR 3.5 ACME	———	1.8	4.0	10.4
* 3	27	5/8	27V ER 3 ACME	———	1.8	5.0	10.4	27V IR 3 ACME	———	1.8	4.6	10.4
** 2	27	5/8	27V ER 2 ACME	27V EL 2 ACME	1.8	5.0	10.4	27V IR 2 ACME	27V IL 2 ACME	1.8	5.0	10.4

* Minimum bore: Ø55 mm ** Minimum bore: Ø76 mm
Order example: 27V ER 2 ACME BMA

For carbide grade and cutting speed see page A04-2 and 3

Stub Acme

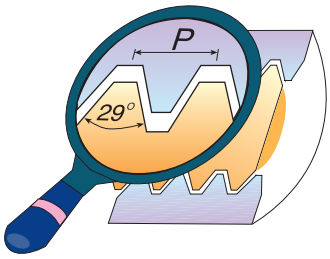

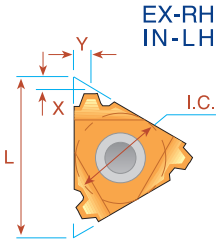

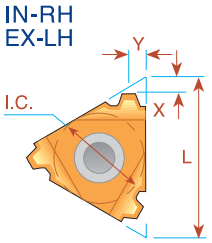

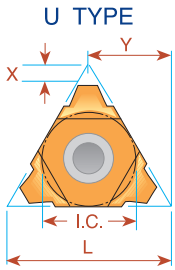

Pitch TPI	L	I.C. in	EXTERNAL Ordering Code Right Hand	EXTERNAL Ordering Code Left Hand	INTERNAL Ordering Code Right Hand	INTERNAL Ordering Code Left Hand	X	Y
16	8	3/16	*MINIATURE* →		**08 IR 16 STACME	**08 IL 16 STACME	0.6	0.6
14	8U	3/16U	*"U" MINIATURE* →		*08U IR/L 14 STACME		0.8	4.0
12	8U	3/16U			*08U IR/L 12 STACME		0.9	4.0
10	8U	3/16U			*08U IR/L 10 STACME		1.0	4.0
16	11	1/4	11 ER 16 STACME	11 EL 16 STACME			1.0	1.0
16	16	3/8	16 ER 16 STACME	16 EL 16 STACME	16 IR 16 STACME	16 IL 16 STACME	1.0	1.0
14	16	3/8	16 ER 14 STACME	16 EL 14 STACME	16 IR 14 STACME	16 IL 14 STACME	1.1	1.1
12	16	3/8	16 ER 12 STACME	16 EL 12 STACME	16 IR 12 STACME	16 IL 12 STACME	1.2	1.2
10	16	3/8	16 ER 10 STACME	16 EL 10 STACME	16 IR 10 STACME	16 IL 10 STACME	1.3	1.3
8	16	3/8	16 ER 8 STACME	16 EL 8 STACME	16 IR 8 STACME	16 IL 8 STACME	1.5	1.5
6	16	3/8	16 ER 6 STACME	16 EL 6 STACME	16 IR 6 STACME	16 IL 6 STACME	1.8	1.8
6	22	1/2	22 ER 6 STACME	22 EL 6 STACME	22 IR 6 STACME	22 IL 6 STACME	1.8	1.8
5	22	1/2	22 ER 5 STACME	22 EL 5 STACME	22 IR 5 STACME	22 IL 5 STACME	2.0	2.3
4	22	1/2	22 ER 4 STACME	22 EL 4 STACME	22 IR 4 STACME	22 IL 4 STACME	2.3	2.4
4	22U	1/2U	22U ER/L 4 STACME		22U IR/L 4 STACME		2.5	11.0
3	22U	1/2U	22U ER/L 3 STACME		22U IR/L 3 STACME		3.3	11.0
4	27	5/8	27 ER 4 STACME	27 EL 4 STACME	27 IR 4 STACME	27 IL 4 STACME	2.3	2.4
3	27	5/8	27 ER 3 STACME	27 EL 3 STACME	27 IR 3 STACME	27 IL 3 STACME	2.8	2.9
2	33U	3/4U	33U ER/L 2 STACME		33U IR/L 2 STACME		5.0	16.9

* Available only in BXC and BMA grades

** One cutting edge

Order example: 22 IR 5 STACME MXC

For carbide grade and cutting speed see page A04-2 and 3

Trapez - DIN 103

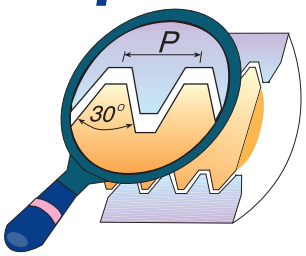

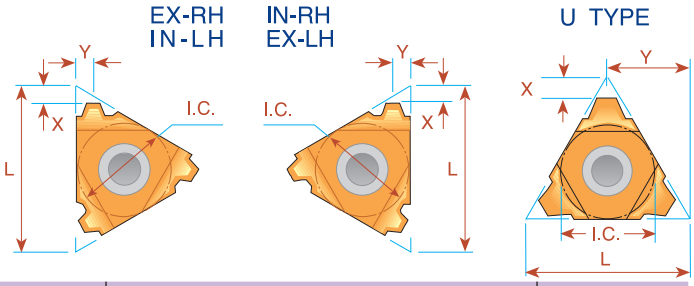

Pitch mm	L	I.C. in	EXTERNAL Ordering Code Right Hand	EXTERNAL Ordering Code Left Hand	INTERNAL Ordering Code Right Hand	INTERNAL Ordering Code Left Hand	X	Y
1.5	8	3/16	*MINIATURE* →		**08 IR 1.5 TR	**08 IL 1.5 TR	0.6	0.6
2.0	8U	3/16U	*"U" MINIATURE* →		*08U IR/L 2 TR		0.9	4.0
1.5	16	3/8	16 ER 1.5 TR	16 EL 1.5 TR			1.0	1.1
2.0	16	3/8	16 ER 2 TR	16 EL 2 TR	16 IR 2 TR	16 IL 2 TR	1.0	1.3
3.0	16	3/8	16 ER 3 TR	16 EL 3 TR	16 IR 3 TR	16 IL 3 TR	1.3	1.5
4.0	16	3/8	(1) 16 ER 4 TR	(1) 16 EL 4 TR	(2) 16 IR 4 TR	(2) 16 IL 4 TR	1.3	1.5
5.0	16U	3/8U			***16U IR/L 5 TR		2.3	8.2
4.0	22	1/2	22 ER 4 TR	22 EL 4 TR	22 IR 4 TR	22 IL 4 TR	1.8	1.9
5.0	22	1/2	22 ER 5 TR	22 EL 5 TR	22 IR 5 TR	22 IL 5 TR	2.0	2.4
6.0	22	1/2	(1) 22 ER 6 TR	(1) 22 EL 6 TR	(1) 22 IR 6 TR	(1) 22 IL 6 TR	2.0	2.4
6.0	22U	1/2U	22U ER/L 6 TR		22U IR/L 6 TR		2.0	11.0
7.0	22U	1/2U	22U ER/L 7 TR		22U IR/L 7 TR		2.3	11.0
(3) 7.0	22U	1/2U			(3) 22U IR/L 7 TR40		2.6	11.0
8.0	22U	1/2U	22U ER/L 8 TR		22U IR/L 8 TR		2.5	11.0
6.0	27	5/8	27 ER 6 TR	27 EL 6 TR	27 IR 6 TR	27 IL 6 TR	2.3	2.7
7.0	27	5/8	27 ER 7 TR	27 EL 7 TR	27 IR 7 TR	27 IL 7 TR	2.2	2.6
8.0	27U	5/8U	27U ER/L 8 TR		27U IR/L 8 TR		2.5	13.7
9.0	27U	5/8U	27U ER/L 9 TR		27U IR/L 9 TR		3.0	13.7
10.0	27U	5/8U	**27U ER/L 10 TR		**27U IR/L 10 TR		3.2	13.7
12.0	33U	3/4U	33U ER/L 12 TR		33U IR/L 12 TR		3.9	16.9

* Available only in BXC and BMA grades

** One cutting edge

*** To be used only with holder SIR/L0014M16UB on page A02-10

Order example: 22 IR 5 TR MXC

(1) Special holder is required or standard holder can be amended by customer.
(2) Special holder is required or standard holder can be amended by customer or to used with holders: SIR/L0012L16B; SIR/L0014L16B
(3) Only for Tr 40 x 7.0. To be used only with holder SIR/L0025S22UB

Trapez - DIN 103
Vertical

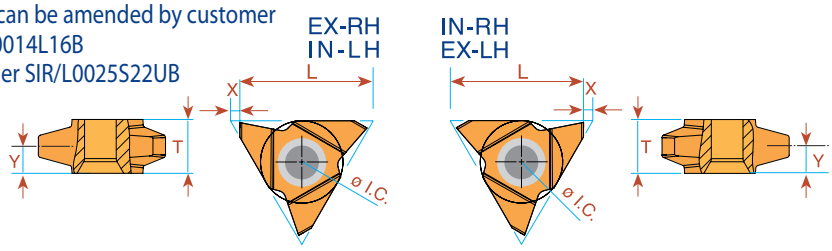

Pitch mm	L	I.C. in	EXTERNAL Ordering Code Right Hand	EXTERNAL Ordering Code Left Hand	INTERNAL Ordering Code Right Hand	INTERNAL Ordering Code Left Hand	X	Y	T
* 9	27	5/8	27V ER 9 TR	27V EL 9 TR	27V IR 9 TR	27V IL 9 TR	1.8	5.2	10.4
* 10	27	5/8	27V ER 10 TR	27V EL 10 TR	27V IR 10 TR	27V IL 10 TR	1.8	5.2	10.4
** 12	27	5/8	27V ER 12 TR	27V EL 12 TR	27V IR 12 TR	27V IL 12 TR	1.8	5.2	10.4

* Minimum bore: Ø65 mm ** Minimum bore: Ø73 mm

Order example: 27V ER 10 TR BMA

For carbide grade and cutting speed see page A04-2 and 3

PG - DIN 40430

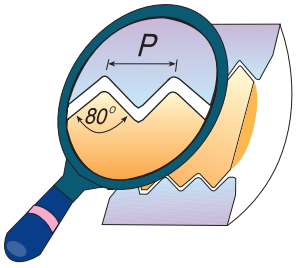

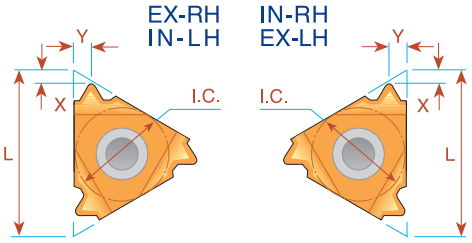

Pitch TPI	L	I.C. in	EXTERNAL Ordering Code Right Hand	EXTERNAL Ordering Code Standard	INTERNAL Ordering Code Right Hand	INTERNAL Ordering Code Standard	X	Y
20	8	3/16	*MINIATURE* →		***08 IR 20 PG**	(PG 7)	0.6	0.7
18	11	1/4			**11 IR 18 PG**	(PG 9)	0.8	0.9
20	16	3/8	**16 ER 20 PG**	(PG 7)			0.7	0.8
18	16	3/8	**16 ER 18 PG**	(PG 9, 11, 13.5, 16)	**16 IR 18 PG**	(PG 11, 13.5, 16)	0.8	0.9
16	16	3/8	**16 ER 16 PG**	(PG 21, 29, 36, 42, 48)	**16 IR 16 PG**	(PG 21, 29, 36, 42, 48)	0.8	1.0

* Available only in BXC and BMA grades

Order example: 16 ER 16 PG BMA

Sagengewinde - DIN 513

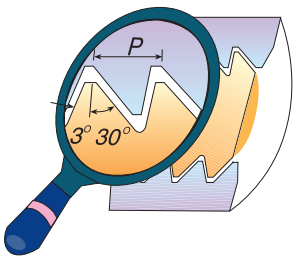

IMPORTANT NOTE:
In CPT standard execution, the flank with the large angle is the leading edge. If otherwise required, please specify in your order.

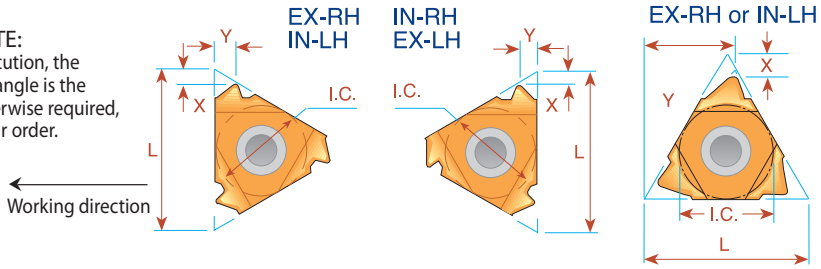

Pitch mm	L	I.C. in	EXTERNAL Ordering Code Right Hand	EXTERNAL Ordering Code Left Hand	X	Y	INTERNAL Ordering Code Right Hand	INTERNAL Ordering Code Left Hand	X	Y
2.0	16	3/8	**16 ER 2 SAGE**	**16 EL 2 SAGE**	1.1	1.6	**16 IR 2 SAGE**	**16 IL 2 SAGE**	1.2	1.7
**3.0	22	1/2	**22 ER 3 SAGE**	**22 EL 3 SAGE**	1.5	2.4	**22 IR 3 SAGE**	**22 IL 3 SAGE**	1.9	2.9
**4.0	22	1/2	**22 ER 4 SAGE**	**22 EL 4 SAGE**	1.9	3.1	**22 IR 4 SAGE**	**22 IL 4 SAGE**	2.3	3.5
*5.0	22U	1/2U	**22U ER 5 SAGE**	**22U EL 5 SAGE**	1.2	11.6	**22U IR 5 SAGE**	**22U IL 5 SAGE**	1.9	11.7
*6.0	22U	1/2U	**22U ER 6 SAGE**	**22U EL 6 SAGE**	1.2	11.7	**22U IR 6 SAGE**	**22U IL 6 SAGE**	2.1	11.9

* Requires a special anvil AER 22U-1.5 SAGE 5/6, AEL 22U-1.5 SAGE 5/6, AIR 22U-1.5 SAGE 5/6, AIL 22U-1.5 SAGE 5/6

* * Requires a special anvil AER 22-1.5 SAGE 3/4, AEL 22-1.5 SAGE 3/4, AIR 22-1.5 SAGE 3/4, AIL 22-1.5 SAGE 3/4

Order example: 22 IR 4 SAGE BMA

For carbide grade and cutting speed see page A04-2 and 3

Round - DIN 405

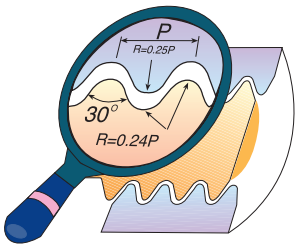

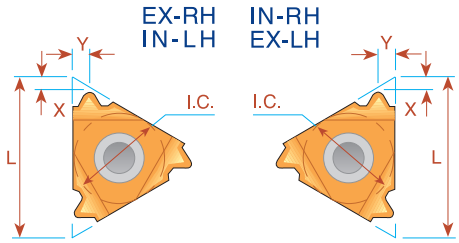

Pitch TPI	L	I.C. in	EXTERNAL Ordering Code Right Hand	EXTERNAL Ordering Code Left Hand	X	Y	INTERNAL Ordering Code Right Hand	INTERNAL Ordering Code Left Hand	X	Y
10	16	3/8	**16 ER 10 RD**	**16 EL 10 RD**	1.1	1.2	**16 IR 10 RD**	**16 IL 10 RD**	1.1	1.2
8	16	3/8	**16 ER 8 RD**	**16 EL 8 RD**	1.4	1.3	**16 IR 8 RD**	**16 IL 8 RD**	1.4	1.4
6	16	3/8	**16 ER 6 RD**	**16 EL 6 RD**	1.5	1.7	**16 IR 6 RD**	**16 IL 6 RD**	1.4	1.5
6	22	1/2	**22 ER 6 RD**	**22 EL 6 RD**	1.5	1.7	**22 IR 6 RD**	**22 IL 6 RD**	1.5	1.7
4	22	1/2	**22 ER 4 RD**	**22 EL 4 RD**	2.2	2.3	**22 IR 4 RD**	**22 IL 4 RD**	2.2	2.3
4	27	5/8	**27 ER 4 RD**	**27 EL 4 RD**	2.2	2.3	**27 IR 4 RD**	**27 IL 4 RD**	2.2	2.3

Order example: 27 IL 4 RD BMA

Round - DIN 20400

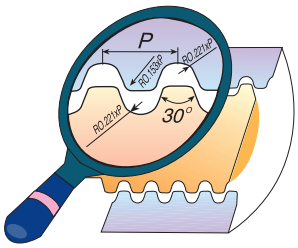

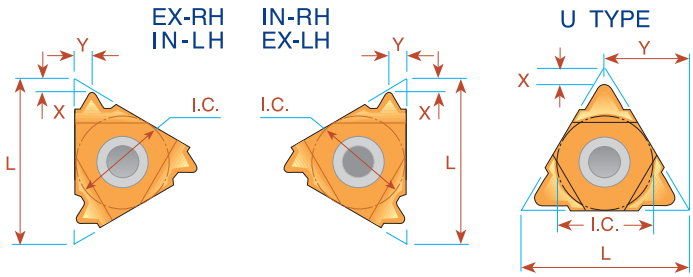

Pitch mm	L	I.C. in	EXTERNAL Ordering Code Right Hand	INTERNAL Ordering Code Right Hand	X	Y
4.0	22	1/2	**22 ER 4.0 RD 20400**	**22 IR 4.0 RD 20400**	1.4	1.4
5.0	22	1/2	**22 ER 5.0 RD 20400**	**22 IR 5.0 RD 20400**	1.7	1.8
6.0	22	1/2	**22 ER 6.0 RD 20400**	**22 IR 6.0 RD 20400**	1.7	2.0
8.0	27U	5/8U	***27U E/I/R/L 8.0 RD 20400**		3.0	13.7
10.0	27U	5/8U	***27U E/I/R/L 10.0 RD 20400**		3.4	13.7
12.0	33U	3/4U	***33U E/I/R/L 12.0 RD 20400**		4.3	16.9

* Same insert for Internal and External Right Hand Thread

Order example: 22 ER 4.0 RD 20400 MXC

For carbide grade and cutting speed see page A04-2 and 3

UNJ UNJC, UNJF, UNJEF, UNJS

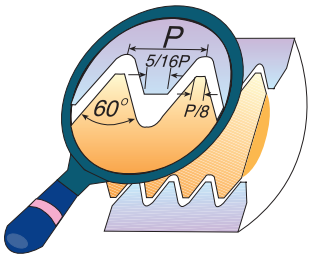

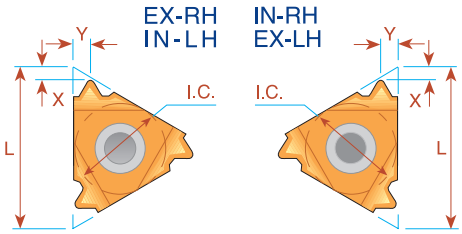

Pitch TPI	L	I.C. in	EXTERNAL Ordering Code Right Hand	EXTERNAL Ordering Code Left Hand	INTERNAL Ordering Code Right Hand	INTERNAL Ordering Code Left Hand	X	Y
28	08	3/16			*08 IR 28 UNJ	*08 IL 28 UNJ	0.6	0.6
24	08	3/16			*08 IR 24 UNJ	*08 IL 24 UNJ	0.6	0.6
20	08	3/16	MINIATURE →		*08 IR 20 UNJ	*08 IL 20 UNJ	0.6	0.7
18	08	3/16			*08 IR 18 UNJ	*08 IL 18 UNJ	0.6	0.7
13	08U	3/16U	"U" MINIATURE →		*08 UIR/L 13 UNJ		0.9	4.0
48	11	1/4	11 ER 48 UNJ	11 EL 48 UNJ	11 IR 48 UNJ	11 IL 48 UNJ	0.6	0.6
44	11	1/4	11 ER 44 UNJ	11 EL 44 UNJ	11 IR 44 UNJ	11 IL 44 UNJ	0.6	0.6
40	11	1/4	11 ER 40 UNJ	11 EL 40 UNJ	11 IR 40 UNJ	11 IL 40 UNJ	0.6	0.6
36	11	1/4	11 ER 36 UNJ	11 EL 36 UNJ	11 IR 36 UNJ	11 IL 36 UNJ	0.6	0.6
32	11	1/4	11 ER 32 UNJ	11 EL 32 UNJ	11 IR 32 UNJ	11 IL 32 UNJ	0.6	0.6
28	11	1/4	11 ER 28 UNJ	11 EL 28 UNJ	11 IR 28 UNJ	11 IL 28 UNJ	0.6	0.6
24	11	1/4	11 ER 24 UNJ	11 EL 24 UNJ	11 IR 24 UNJ	11 IL 24 UNJ	0.7	0.8
20	11	1/4	11 ER 20 UNJ	11 EL 20 UNJ	11 IR 20 UNJ	11 IL 20 UNJ	0.8	0.9
18	11	1/4	11 ER 18 UNJ	11 EL 18 UNJ	11 IR 18 UNJ	11 IL 18 UNJ	0.8	1.0
16	11	1/4	11 ER 16 UNJ	11 EL 16 UNJ	11 IR 16 UNJ	11 IL 16 UNJ	0.8	1.0
14	11	1/4	11 ER 14 UNJ	11 EL 14 UNJ	11 IR 14 UNJ	11 IL 14 UNJ	0.9	1.0
48	16	3/8	16 ER 48 UNJ	16 EL 48 UNJ	16 IR 48 UNJ	16 IL 48 UNJ	0.6	0.6
44	16	3/8	16 ER 44 UNJ	16 EL 44 UNJ	16 IR 44 UNJ	16 IL 44 UNJ	0.6	0.6
40	16	3/8	16 ER 40 UNJ	16 EL 40 UNJ	16 IR 40 UNJ	16 IL 40 UNJ	0.6	0.6
36	16	3/8	16 ER 36 UNJ	16 EL 36 UNJ	16 IR 36 UNJ	16 IL 36 UNJ	0.6	0.6
32	16	3/8	16 ER 32 UNJ	16 EL 32 UNJ	16 IR 32 UNJ	16 IL 32 UNJ	0.6	0.6
28	16	3/8	16 ER 28 UNJ	16 EL 28 UNJ	16 IR 28 UNJ	16 IL 28 UNJ	0.6	0.6
24	16	3/8	16 ER 24 UNJ	16 EL 24 UNJ	16 IR 24 UNJ	16 IL 24 UNJ	0.7	0.8
20	16	3/8	16 ER 20 UNJ	16 EL 20 UNJ	16 IR 20 UNJ	16 IL 20 UNJ	0.8	0.9
18	16	3/8	16 ER 18 UNJ	16 EL 18 UNJ	16 IR 18 UNJ	16 IL 18 UNJ	0.8	1.0
16	16	3/8	16 ER 16 UNJ	16 EL 16 UNJ	16 IR 16 UNJ	16 IL 16 UNJ	0.8	1.0
14	16	3/8	16 ER 14 UNJ	16 EL 14 UNJ	16 IR 14 UNJ	16 IL 14 UNJ	1.0	1.2
13	16	3/8	16 ER 13 UNJ	16 EL 13 UNJ	16 IR 13 UNJ	16 IL 13 UNJ	1.0	1.3
12	16	3/8	16 ER 12 UNJ	16 EL 12 UNJ	16 IR 12 UNJ	16 IL 12 UNJ	1.1	1.4
11	16	3/8	16 ER 11 UNJ	16 EL 11 UNJ	16 IR 11 UNJ	16 IL 11 UNJ	1.1	1.5
10	16	3/8	16 ER 10 UNJ	16 EL 10 UNJ	16 IR 10 UNJ	16 IL 10 UNJ	1.1	1.5
9	16	3/8	16 ER 9 UNJ	16 EL 9 UNJ	16 IR 9 UNJ	16 IL 9 UNJ	1.2	1.6
8	16	3/8	16 ER 8 UNJ	16 EL 8 UNJ	16 IR 8 UNJ	16 IL 8 UNJ	1.2	1.6

* Available only in BXC and BMA grades
Order example: 16 IR 16 UNJ MXC

For carbide grade and cutting speed see page A04-2 and 3

UNJ UNJC, UNJF, UNJEF, UNJS

Type B

Ground profile with sintered chip-breaker

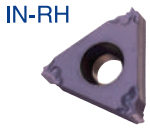

Pitch TPI	L	I.C. in	INTERNAL Ordering Code Right Hand	X	Y
32	11	1/4	11 IR B 32 UNJ	0.6	0.6
28	11	1/4	11 IR B 28 UNJ	0.6	0.6
24	11	1/4	11 IR B 24 UNJ	0.6	0.6
20	11	1/4	11 IR B 20 UNJ	0.8	0.9
18	11	1/4	11 IR B 18 UNJ	0.8	0.9
16	11	1/4	11 IR B 16 UNJ	0.8	0.9
14	11	1/4	11 IR B 14 UNJ	0.8	0.9

Order example: 11 IR B 20 UNJ BMA

Multitooth

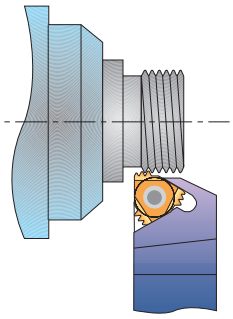

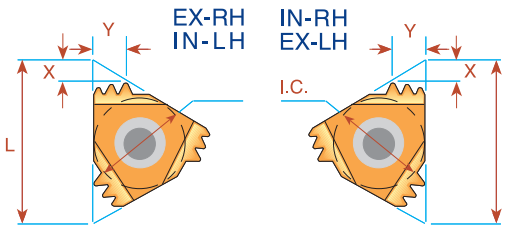

Pitch TPI	L	I.C. in	Number of Teeth	EXTERNAL Ordering Code	Anvil	INTERNAL Ordering Code	Anvil	X	Y
16	16	3/8	2	16 ER 16 UNJ 2M	AE16M	-	-	1.6	2.4
16	22	1/2	3	22 ER 16 UNJ 3M	AE22M	-	-	2.3	3.8

Order example: 22 ER 16 UNJ 3M BMA

For carbide grade and cutting speed see page A04-2 and 3

MJ - ISO 5855

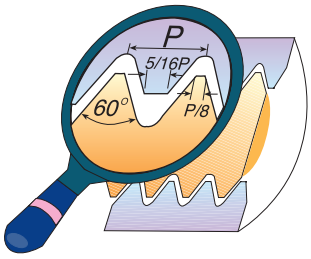

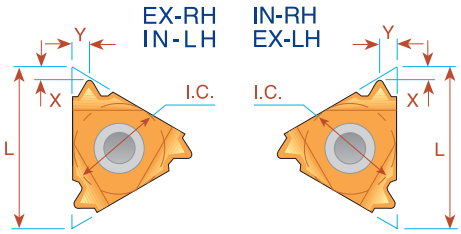

Pitch mm	L	I.C. in	EXTERNAL Ordering Code Right Hand	INTERNAL Ordering Code Right Hand	X	Y
0.5	11	1/4		11 IR 0.5 MJ	0.5	0.4
0.7	11	1/4		11 IR 0.7 MJ	0.6	0.5
0.75	11	1/4		11 IR 0.75 MJ	0.6	0.5
0.8	11	1/4		11 IR 0.8 MJ	0.6	0.6
1.0	11	1/4	11 ER 1.0 MJ	11 IR 1.0 MJ	0.7	0.8
1.25	11	1/4	11 ER 1.25 MJ	11 IR 1.25 MJ	0.8	0.9
1.5	11	1/4	11 ER 1.5 MJ	11 IR 1.5 MJ	0.8	1.0
2.0	11	1/4		11 IR 2.0 MJ	0.9	1.0
0.5	16	3/8	16 ER 0.5 MJ		0.6	0.6
0.7	16	3/8	16 ER 0.7 MJ		0.6	0.6
0.75	16	3/8	16 ER 0.75 MJ	16 IR 0.75 MJ	0.5	0.5
0.8	16	3/8	16 ER 0.8 MJ	16 IR 0.8 MJ	0.6	0.6
1.0	16	3/8	16 ER 1.0 MJ	16 IR 1.0 MJ	0.7	0.8
1.25	16	3/8	16 ER 1.25 MJ	16 IR 1.25 MJ	0.8	0.9
1.5	16	3/8	16 ER 1.5 MJ	16 IR 1.5 MJ	0.8	1.0
1.75	16	3/8	16 ER 1.75 MJ	16 IR 1.75 MJ	0.9	1.1
2.0	16	3/8	16 ER 2.0 MJ	16 IR 2.0 MJ	1.0	1.3
3.0	16	3/8	16 ER 3.0 MJ	16 IR 3.0 MJ	1.2	1.6

Order example: 16 ER 1.5 MJ BMA

Type B

Ground profile with sintered chip-breaker

Pitch mm	L	I.C. in	INTERNAL Ordering Code Right Hand	X	Y
1.0	11	1/4	11 IR B 1.0 MJ	0.6	0.6
1.5			11 IR B 1.5 MJ	0.8	0.9

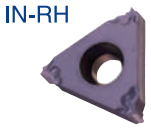

Order example: 11 IR B 1.5 MJ BMA

For carbide grade and cutting speed see page A04-2 and 3

American Buttress

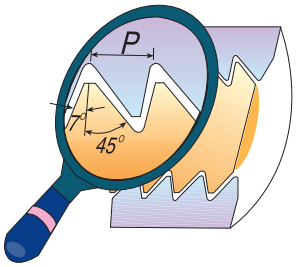

IMPORTANT NOTE:
In CPT standard execution, the flank with the large angle is the leading edge. If otherwise required, please specify in your order.

Working direction

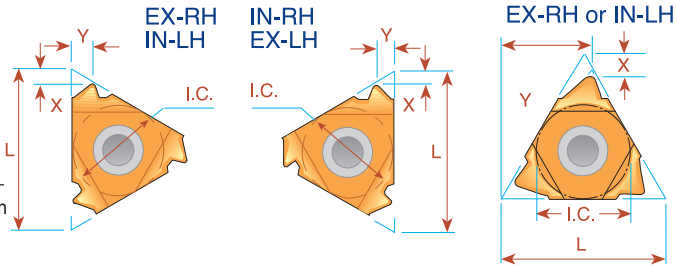

Pitch TPI	L	I.C. in	EXTERNAL Ordering Code Right Hand	EXTERNAL Ordering Code Left Hand	INTERNAL Ordering Code Right Hand	INTERNAL Ordering Code Left Hand	X	Y
20	11	1/4	11 ER 20 ABUT	11 EL 20 ABUT	11 IR 20 ABUT	11 IL 20 ABUT	1.0	1.3
16	11	1/4	11 ER 16 ABUT	11 EL 16 ABUT	11 IR 16 ABUT	11 IL 16 ABUT	1.0	1.5
20	16	3/8	16 ER 20 ABUT	16 EL 20 ABUT	16 IR 20 ABUT	16 IL 20 ABUT	1.0	1.3
16	16	3/8	16 ER 16 ABUT	16 EL 16 ABUT	16 IR 16 ABUT	16 IL 16 ABUT	1.0	1.5
12	16	3/8	16 ER 12 ABUT	16 EL 12 ABUT	16 IR 12 ABUT	16 IL 12 ABUT	1.4	2.0
10	16	3/8	16 ER 10 ABUT	16 EL 10 ABUT	16 IR 10 ABUT	16 IL 10 ABUT	1.5	2.3
8	22	1/2	22 ER 8 ABUT	22 EL 8 ABUT	22 IR 8 ABUT	22 IL 8 ABUT	2.1	3.3
6	22	1/2	22 ER 6 ABUT	22 EL 6 ABUT	22 IR 6 ABUT	22 IL 6 ABUT	2.1	3.4
(1) 4	22U	1/2U	22U ER 4 ABUT	22U EL 4 ABUT	22U IR 4 ABUT	22U IL 4 ABUT	2.3	9.5
(3) 5	27	5/8	27 ER 5 ABUT	27 EL 5 ABUT	27 IR 5 ABUT	27 IL 5 ABUT	2.75	4.5
(2) 3	27U	5/8U	27U ER 3 ABUT	27U EL 3 ABUT	27U IR 3 ABUT	27U IL 3 ABUT	3.1	11.7

Order example: 16 IL 12 ABUT MXC

Most applications requires anvil change in toolholder see page A04-7

(1) Requires a special anvil AE 22U-1.5 ABUT4, AI22U-1.5 ABUT4
(2) Requires a special anvil AE 27U-1.5 ABUT3, AI27U-1.5 ABUT3
(3) Requires a special anvil AE 27-1.5 ABUT5, AI27-1.5 ABUT5

Multitooth

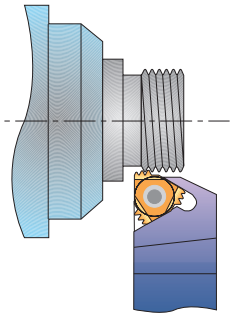

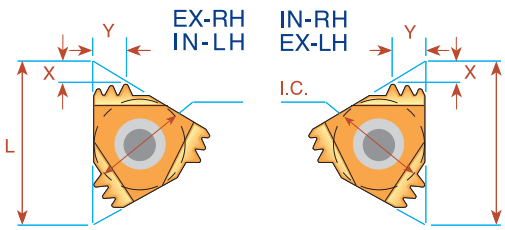

Pitch TPI	L	I.C. in	Number of Teeth	EXTERNAL Ordering Code	Anvil	INTERNAL Ordering Code	Anvil	X	Y
12	22	1/2	2	22 ER 12 ABUT 2M	AE22M	22 IR 12 ABUT 2M	AI22M	2.5	4.0

Order example: 22 IR 12 ABUT 2M BMA

For carbide grade and cutting speed see page A04-2 and 3

Threading Tools for the Oil & Gas Industries

API Round

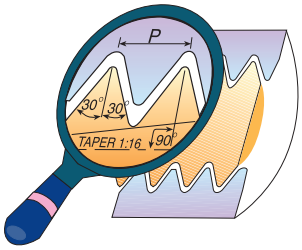

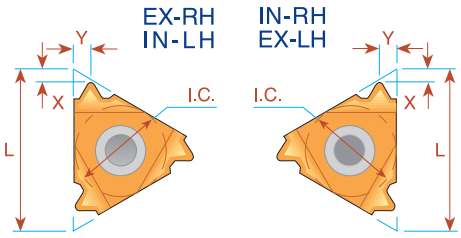

Pitch TPI	L	I.C. in	Taper IPF	EXTERNAL Ordering Code Right Hand	INTERNAL Ordering Code Right Hand	X	Y
10	16	3/8	0.75	**16 ER 10 API RD**	**16 IR 10 API RD**	1.5	1.4
8	16	3/8	0.75	**16 ER 8 API RD**	**16 IR 8 API RD**	1.3	1.6

Order example: 16 ER 10 API RD BMA

Multitooth

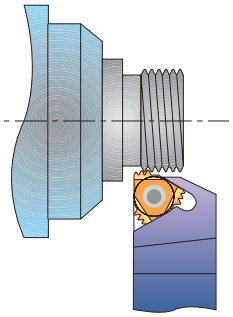

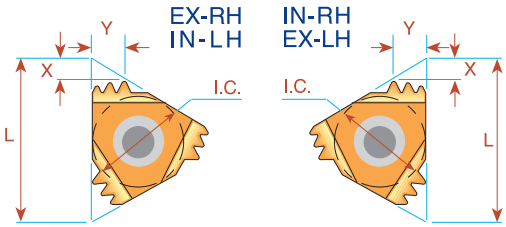

Pitch TPI	L	I.C. in	Number of Teeth	EXTERNAL Ordering Code	Anvil	INTERNAL Ordering Code	Anvil	X	Y
10	22	1/2	2	**22 ER 10 API RD 2M**	AE22M	**22 IR 10 API RD 2M**	AI22M	2.4	3.7
10	27	5/8	3	**27 ER 10 API RD 3M**	AE27M	**27 IR 10 API RD 3M**	AI27M	3.8	6.2
8	27	5/8	2	**27 ER 8 API RD 2M**	AE27M	**27 IR 8 API RD 2M**	AI27M	3.0	4.5

Order example: 27 IR 10 API RD 3M MXC

For recommended number of passes see page A04-4

For carbide grade and cutting speed see page A04-2 and 3

OIL Threads

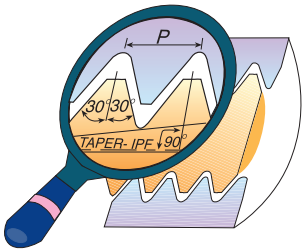

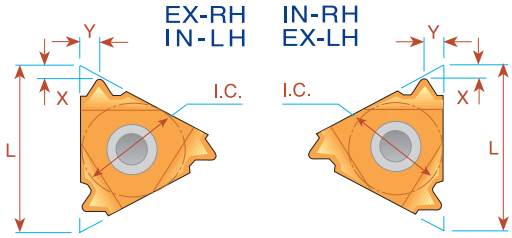

V-0.040

Pitch TPI	L	I.C. in	Taper IPF	EXTERNAL Ordering Code Right Hand	INTERNAL Ordering Code Right Hand	X	Y	Connection No. or Size
5	22	1/2	3	**22 ER 5 API 403**	**22 IR 5 API 403**	1.8	2.5	2 3/8-4 1/2 REG

(1) V-0.038R

Pitch TPI	L	I.C. in	Taper IPF	EXTERNAL Ordering Code Right Hand	INTERNAL Ordering Code Right Hand	X	Y	Connection No. or Size
4	27	5/8	2	**27 ER 4 API 382**	**27 IR 4 API 382**	2.1	2.8	NC23-NC50
4	27	5/8	3	**27 ER 4 API 383**	**27 IR 4 API 383**	2.1	2.8	NC56-NC77
4	22	1/2	2	**22 ER 4 API 382**	**22 IR 4 API 382**	2.0	2.5	NC23-NC50
4	22	1/2	3	**22 ER 4 API 383**	**22 IR 4 API 383**	2.0	2.6	NC56-NC77

Order example: 27 ER 4 API 383 MXC

(1) V-0.050

Pitch TPI	L	I.C. in	Taper IPF	EXTERNAL Ordering Code Right Hand	INTERNAL Ordering Code Right Hand	X	Y	Connection No. or Size
4	27	5/8	2	**27 ER 4 API 502**	**27 IR 4 API 502**	2.0	3.0	6 5/8 REG
4	27	5/8	3	**27 ER 4 API 503**	**27 IR 4 API 503**	2.0	3.0	5 1/2, 7 5/8, 8 5/8 REG
4	22	1/2	2	**22 ER 4 API 502**	**22 IR 4 API 502**	1.9	2.7	6 5/8 REG
4	22	1/2	3	**22 ER 4 API 503**	**22 IR 4 API 503**	1.9	2.8	5 1/2, 7 5/8, 8 5/8 REG

Order example: 22 ER 4 API 502 BMA

V-0.055

Macaroni Tubing (MT)
American Macaroni Tubing (AMT)
American Mining Macaroni Tubing (AMMT)

Pitch TPI	L	I.C. in	Taper IPF	EXTERNAL Ordering Code Right Hand	INTERNAL Ordering Code Right Hand	X	Y	Connection No. or Size
6	22	1/2	1.5	**22 ER 6 API 551.5**	-	2.0	1.7	NC10,NC12,NC13,NC16
6	16	3/8	1.5	-	**16 IR 6 API 551.5**	2.0	1.7	NC10,NC12,NC13 *
6	22	1/2	1.5	-	**22 IR 6 API 551.5**	2.0	1.7	NC16 **

* For NC10,NC12 use holder SIR0016P16CB
For NC13 use holders SIR0020P16/SIR0020P16B/SIR0020S16CB

** For NC16 use holder SIR0025R22

(1) For V-0.038R, V-0.050 we recommend to use size 27 for more stability.

For carbide grade and cutting speed see page A04-2 and 3

OIL Threads

Extreme - Line Casing

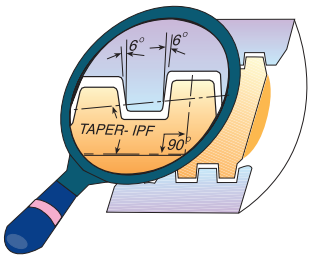

Pitch TPI	L	I.C. in	Taper IPF	EXTERNAL Ordering Code Right Hand	INTERNAL Ordering Code Right Hand	X	Y	Connection No. or Size
6	22	1/2	1.50	**22 ER 6 EL 1.5**	**22 IR 6 EL 1.5**	1.9	1.9	5 - 7 5/8
5	22	1/2	1.25	**22 ER 5 EL 1.25**	**22 IR 5 EL 1.25**	2.4	2.3	8 5/8-10 3/4

Buttress Casing

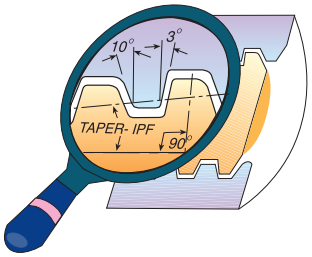

Pitch TPI	L	I.C. in	Taper IPF	EXTERNAL Ordering Code Right Hand	INTERNAL Ordering Code Right Hand	X	Y	Connection No. or Size
5	22	1/2	0.75	**22 ER 5 BUT 0.75**	**22 IR 5 BUT 0.75**	2.2	2.4	4 1/2 -13 3/8
5	22	1/2	1.00	**22 ER 5 BUT 1.0**	**22 IR 5 BUT 1.0**	2.3	2.4	16 -20

Order example: 22 ER 5 BUT 0.75 MXC

VAM

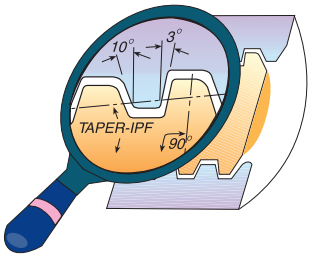

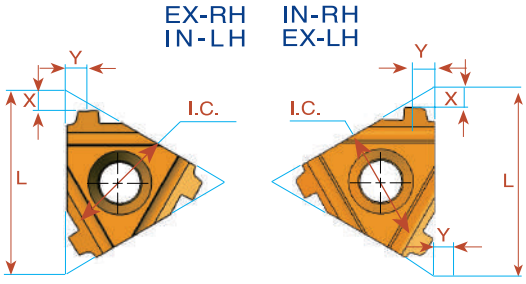

Pitch TPI	L	I.C. in	Taper IPF	EXTERNAL Ordering Code Right Hand	X	Y	INTERNAL Ordering Code Right Hand	X	Y	Connection No. or Size
8	16	3/8	0.75	**16 ER 8 VAM**	1.7	1.8	**16 IR 8 VAM**	1.7	1.8	2 3/8 - 2 7/8
6	22	1/2	0.75	**22 ER 6 VAM**	2.4	2.4	**22 IR 6 VAM**	2.5	2.5	3 1/2 - 4 1/2
5	22	1/2	0.75	**22 ER 5 VAM**	2.4	2.7	**22 IR 5 VAM**	2.4	2.5	5 - 13 3/8

Order example: 16 ER 8 VAM BMA

For carbide grade and cutting speed see page A04-2 and 3

HUGHES

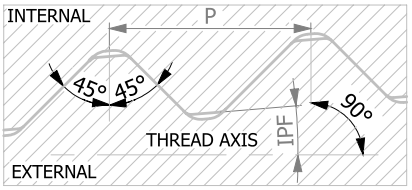

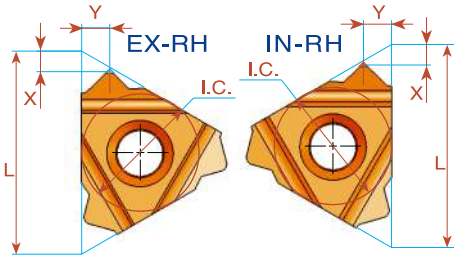

Pitch TPI	L mm	I.C.	Taper IPF	EXTERNAL Ordering Code Right Hand	INTERNAL Ordering Code Right Hand	X	Y	Connection No. or Size
3.5	27	5/8	2	**27 ER 3.5 H-902**	**27 IR 3.5 H-902**	2.8	3.8	3 1/2 - 6 5/8
3.5	27	5/8	3	**27 ER 3.5 H-903**	**27 IR 3.5 H-903**	2.8	3.8	7 - 8 5/8
3	27	5/8	1.25	**27 ER 3 SLH-90**	**27 IR 3 SLH-90**	3.3	4.6	2 3/8 - 3 1/2

Order example: 27 ER 3.5 H-903 BMA

PAC

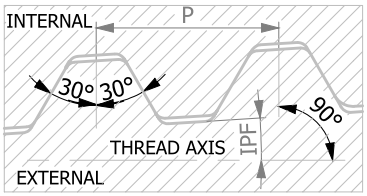

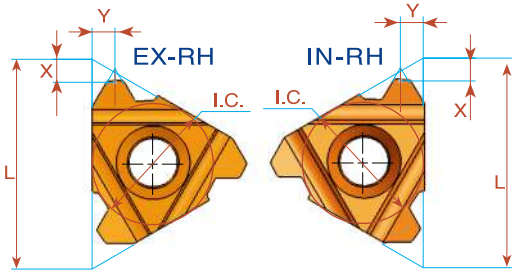

Pitch TPI	L mm	I.C.	Taper IPF	EXTERNAL Ordering Code Right Hand	INTERNAL Ordering Code Right Hand	X	Y	Connection No. or Size
4	22	1/2	1.5	**22 ER 4 PAC**	**22 IR 4 PAC**	2.3	2.3	2 1/2 - 2 7/8
4	27	5/8	1.5	**27 ER 4 PAC**	**27 IR 4 PAC**	2.3	2.3	2 1/2 - 2 7/8

Order example: 22 ER 4 PAC MXC

NPS

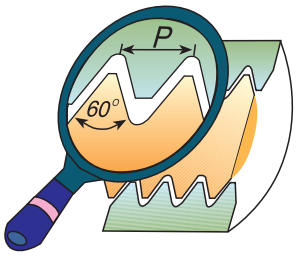

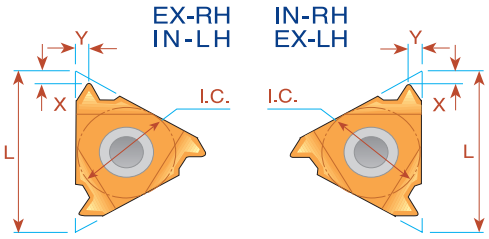

Pitch TPI	L mm	I.C.	EXTERNAL Ordering Code Right Hand	EXTERNAL Ordering Code Left Hand	INTERNAL Ordering Code Right Hand	INTERNAL Ordering Code Left Hand	X	Y
18	16	3/8	**16 ER 18 NPS**	**16 EL 18 NPS**	**16 IR 18 NPS**	**16 IL 18 NPS**	0.8	1
14	16	3/8	**16 ER 14 NPS**	**16 EL 14 NPS**	**16 IR 14 NPS**	**16 IL 14 NPS**	1	1.3
11.5	16	3/8	**16 ER 11.5 NPS**	**16 EL 11.5 NPS**	**16 IR 11.5 NPS**	**16 IL 11.5 NPS**	1	1.5
8	16	3/8	**16 ER 8 NPS**	**16 EL 8 NPS**	**16 IR 8 NPS**	**16 IL 8 NPS**	1.3	1.8

Order example: 16 ER 18 NPS BMA

NPSM

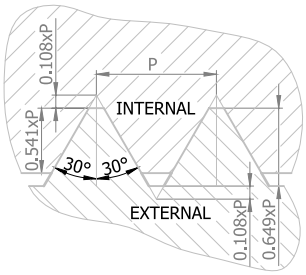

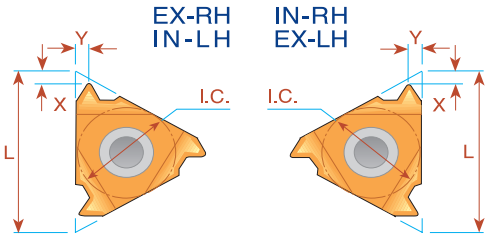

Pitch TPI	L mm	I.C.	EXTERNAL Ordering Code Right Hand	X	Y	INTERNAL Ordering Code Right Hand	X	Y
18	8	3/16				**08 IR 18 NPSM**	0.7	0.7
18	11	1/4				**11 IR 18 NPSM**	0.8	1.0
18	16	3/8	**16 ER 18 NPSM**	0.8	1.0			
14	16	3/8	**16 ER 14 NPSM**	1.0	1.2	**16 IR 14 NPSM**	1.0	1.2
11.5	16	3/8	**16 ER 11.5 NPSM**	1.2	1.5	**16 IR 11.5 NPSM**	1.2	1.5
8	16	3/8	**16 ER 8 NPSM**	1.3	1.6	**16 IR 8 NPSM**	1.2	1.5

Order example: 16 IR 14 NPSM MXC

For carbide grade and cutting speed see page A04-2 and 3

Vertical

API

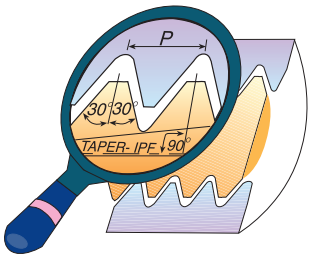

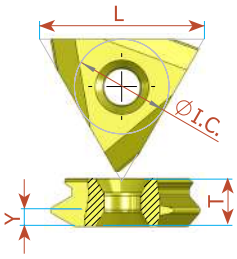

VERTICAL EXTERNAL

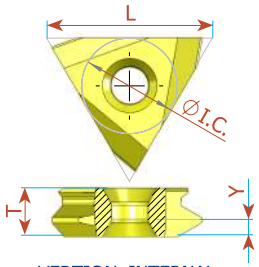

VERTICAL INTERNAL

Thread Form	Pitch TPI	L	I.C. in	Taper IPF	***EXTERNAL*** Ordering Code	Y	T	Connection No. or Size
V-0.040	5	27	5/8	3	**TNMB 54 ER 5 API 403**	2.5	6.4	2 3/8-4 1/2 REG
V-0.038R	4	27	5/8	2	**TNMC 55 ER 4 API 382**	2.8	7.94	NC23-NC50
V-0.038R	4	27	5/8	3	**TNMC 55 ER 4 API 383**	2.8	7.94	NC56-NC77
V-0.050	4	27	5/8	2	**TNMC 55 ER 4 API 502**	3.0	7.94	6 5/8 REG
V-0.050	4	27	5/8	3	**TNMC 55 ER 4 API 503**	3.0	7.94	5 1/2,7 5/8, 8 5/8 REG

Vertical inserts to be used with compatible holders on the market

Order example: TNMC 55 ER 4 API 503 BMA

Thread Form	Pitch TPI	L	I.C. in	Taper IPF	***INTERNAL*** Ordering Code	Y	T	Connection No. or Size
V-0.040	5	27	5/8	3	**TNMB 54 IR 5 API 403**	2.5	6.4	2 3/8-4 1/2 REG
V-0.038R	4	27	5/8	2	**TNMC 55 IR 4 API 382**	2.8	7.94	NC23-NC50
V-0.038R	4	27	5/8	3	**TNMC 55 IR 4 API 383**	2.8	7.94	NC56-NC77
V-0.050	4	27	5/8	2	**TNMC 55 IR 4 API 502**	3.0	7.94	6 5/8 REG
V-0.050	4	27	5/8	3	**TNMC 55 IR 4 API 503**	3.0	7.94	5 1/2,7 5/8, 8 5/8 REG

Vertical inserts to be used with compatible holders on the market

Order example: TNMC 55 IR 4 API 502 BMA

For carbide grade and cutting speed see page A04-2 and 3

Vertical

API Buttress Casing

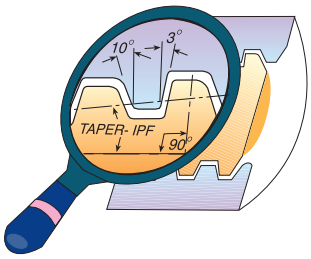

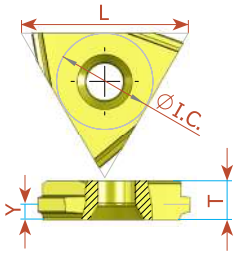

VERTICAL EXTERNAL

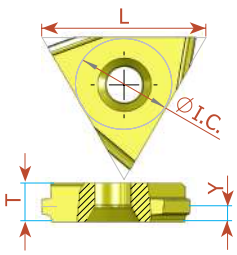

VERTICAL INTERNAL

Pitch TPI	L	I.C. in	Taper IPF	***EXTERNAL*** Ordering Code	Y	T	Connection No. or Size
5	27	5/8	0.75	**TNMB 54 ER 5 BUT 0.75**	2.4	6.4	4 1/2 -13 3/8
5	27	5/8	1.00	**TNMB 54 ER 5 BUT 1.0**	2.4	6.4	16 -20

Order example: TNMB 54 ER 5 BUT 1.0 BMA

Pitch TPI	L	I.C. in	Taper IPF	***INTERNAL*** Ordering Code	Y	T	Connection No. or Size
5	27	5/8	0.75	**TNMB 54 IR 5 BUT 0.75**	2.4	6.4	4 1/2 -13 3/8
5	27	5/8	1.00	**TNMB 54 IR 5 BUT 1.0**	2.4	6.4	16 -20

Vertical inserts to be used with compatible holders on the market

Order example: TNMB 54 IR 5 BUT 0.75 BMA

For carbide grade and cutting speed see page A04-2 and 3

Vertical

API Round

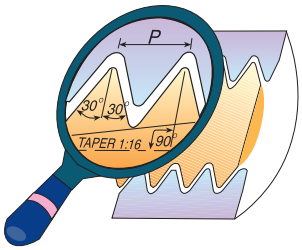

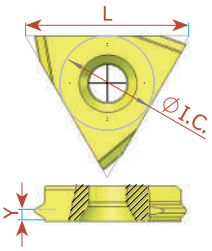

VERTICAL EXTERNAL

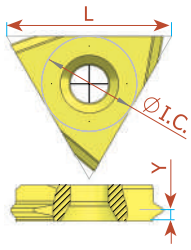

VERTICAL INTERNAL

Pitch TPI	L	I.C. in	Taper IPF	***EXTERNAL*** Ordering Code	Y	T
10	22	1/2	0.75	**TNMB 43 ER 10 API RD**	1.45	4.76
8	22	1/2	0.75	**TNMB 43 ER 8 API RD**	1.65	4.76

Order example: TNMB 43 ER 10 API RD BMA

Pitch TPI	L	I.C. in	Taper IPF	***INTERNAL*** Ordering Code	Y	T
10	22	1/2	0.75	**TNMB 43 IR 10 API RD**	1.45	4.76
8	22	1/2	0.75	**TNMB 43 IR 8 API RD**	1.65	4.76

Vertical inserts to be used with compatible holders on the market

Order example: TNMB 43 IR 8 API RD BMA

For carbide grade and cutting speed see page A04-2 and 3

Chasers

API Round

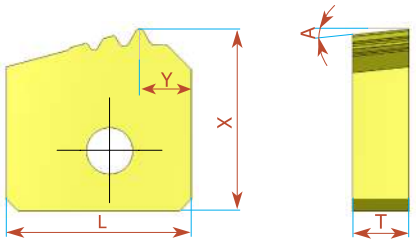

Pitch TPI	L	Taper IPF	EXTERNAL Ordering Code	X	Y	T	A	No. of Teeth
10	15.75	0.75	**15.75 ER 10 API RD 3T**	15.435	4.4	4.76	6°	3
8	15.75	0.75	**15.75 ER 8 API RD 3T**	15.84	4.4	4.76	6°	3

Order example: 15.75 ER 10 API RD 3T BMA

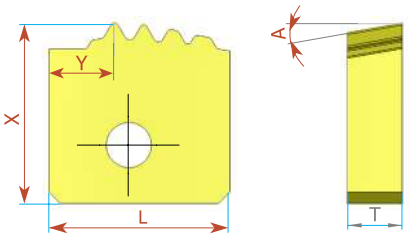

Pitch TPI	L	Taper IPF	INTERNAL Ordering Code	X	Y	T	A	No. of Teeth
10	15.75	0.75	**15.75 IR 10 API RD 4T**	15.75	5.7	4.76	10°	4
8	15.875	0.75	**15.875 IR 8 API RD 4T**	15.75	4.2	4.76	10°	4

Chasers to be used with compatible holders on the market

Order example: 15.75 IR 10 API RD 4T BMA

For carbide grade see page A04-2

Chasers

API Buttress Casing

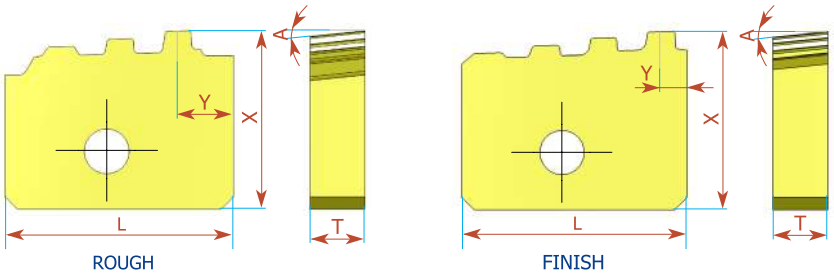

Pitch TPI	L	Taper IPF	EXTERNAL Ordering Code	X	Y	T	A	No. of Teeth
5	20	0.75	**20 ER 5 BUT 0.75R**	15.692	4.84	4.76	6°	3
5	20	0.75	**20 ER 5 BUT 0.75F**	15.875	2.3	4.76	6°	4

Order example: 20 ER 5 BUT 0.75F BMA

Chasers

OTTM Buttress Casing

Pitch TPI	L	Taper IPF	EXTERNAL Ordering Code	X	Y	T	A	No. of Teeth
5	20	0.75	**20 ER 5 OTTM 0.75R**	15.692	4.79	4.76	6°	3
5	20	0.75	**20 ER 5 OTTM 0.75F**	15.909	2.25	4.76	6°	4

Chasers to be used with compatible holders on the market

Order example: 20 ER 5 OTTM 0.75F BMA

For carbide grade see page A04-2

Chasers

API Buttress Casing

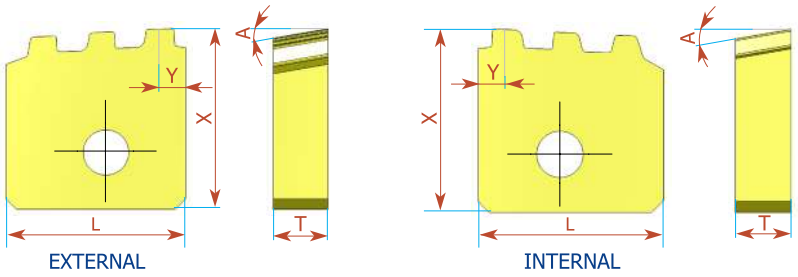

Pitch TPI	L	Taper IPF	EXTERNAL Ordering Code	X	Y	T	A	No. of Teeth
5	15.75	0.75	**15.75 ER 5 BUT 0.75 3T**	15.875	2.3	4.76	10°	3

Pitch TPI	L	Taper IPF	INTERNAL Ordering Code	X	Y	T	A	No. of Teeth
5	15.875	0.75	**15.875 IR 5 BUT 0.75 3T**	15.75	2.5	4.76	10°	3

Order example: 15.75 ER 5 BUT 0.75 3T BMA

Chasers

OTTM Buttress Casing

Pitch TPI	L	Taper IPF	EXTERNAL Ordering Code	X	Y	T	A	No. of Teeth
5	15.75	0.75	**15.75 ER 5 OTTM 0.75 3T**	15.75	3.0	4.76	6°	3

Pitch TPI	L	Taper IPF	INTERNAL Ordering Code	X	Y	T	A	No. of Teeth
5	15.875	0.75	**15.875 IR 5 OTTM 0.75 3T**	15.875	2.5	4.76	10°	3

Chasers to be used with compatible holders on the market

Order example: 15.75 ER 5 OTTM 0.75 3T BMA

For carbide grade see page A04-2

Chasers

API Buttress Casing

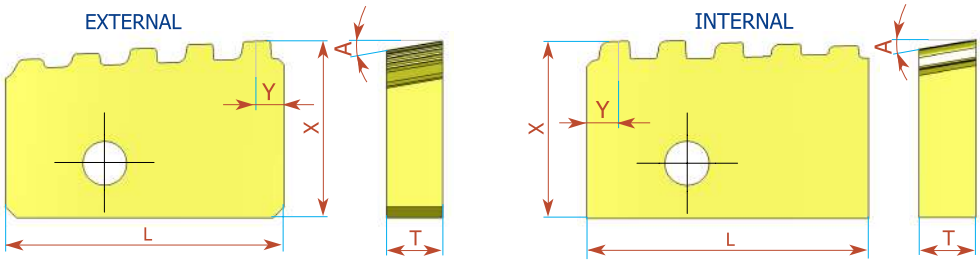

Pitch TPI	L	Taper IPF	EXTERNAL Ordering Code	X	Y	T	A	No. of Teeth
5	25	0.75	**25 ER 5 BUT 0.75 5T**	15.871	2.5	5	10°	5

Pitch TPI	L	Taper IPF	INTERNAL Ordering Code	X	Y	T	A	No. of Teeth
5	25	0.75	**25 IR 5 BUT 0.75 5T**	15.875	2.5	5	10°	5

Order example: 25 IR 5 BUT 0.75 5T BMA

Chasers

OTTM Buttress Casing

Pitch TPI	L	Taper IPF	INTERNAL Ordering Code	X	Y	T	A	No. of Teeth
5	25	0.75	**25 IR 5 OTTM 0.75 5T**	15.75	2.5	5	10°	5

Chasers to be used with compatible holders on the market

Order example: 25 IR 5 OTTM 0.75 5T BMA

For carbide grade see page A04-2

Chasers

API Buttress Casing

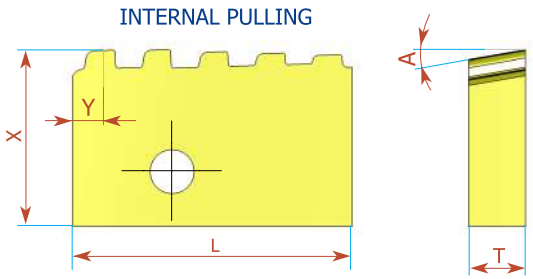

Pitch TPI	L	Taper IPF	INTERNAL Ordering Code	X	Y	T	A	No. of Teeth
5	25	0.75	**25 IRP 5 BUT 0.75 5T**	15.75	2.5	5	10°	5

Order example: 25 IRP 5 BUT 0.75 5T BMA

Chasers

OTTM Buttress Casing

Pitch TPI	L	Taper IPF	INTERNAL Ordering Code	X	Y	T	A	No. of Teeth
5	25	0.75	**25 IRP 5 OTTM 0.75 5T**	15.75	2.5	5	10°	5

Chasers to be used with compatible holders on the market

Order example: 25 IRP 5 OTTM 0.75 5T BMA

For carbide grade see page A04-2

Large Profile Inserts and Toolholders

- Wide range of pitches
- Rigid clamping
- Tailor made profiles according to customer's request are possible



External *Internal*

Large Profile Inserts

Trapez - DIN 103

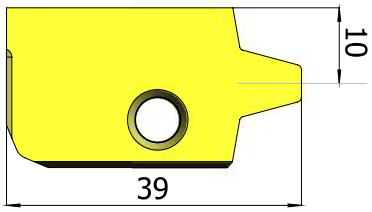

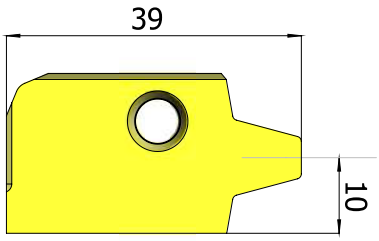

Pitch mm	Ordering Code EX RH	Holder Code	Ordering Code EX LH	Holder Code	Ordering Code IN RH	Holder Code	Ordering Code IN LH	Holder Code
14	**40 ER 14 TR**	H1	**40 EL 14 TR**	H2	**40 IR 14 TR**	H7, 6	**40 IL 14 TR**	H8, 5
16	**40 ER 16 TR**		**40 EL 16 TR**		**40 IR 16 TR**		**40 IL 16 TR**	
18	**40 ER 18 TR**		**40 EL 18 TR**		**40 IR 18 TR**		**40 IL 18 TR**	
20	**40 ER 20 TR**	H3	**40 EL 20 TR**	H4	**40 IR 20 TR**	H9	**40 IL 20 TR**	H10
22	**40 ER 22 TR**		**40 EL 22 TR**		**40 IR 22 TR**		**40 IL 22 TR**	
24	**40 ER 24 TR**		**40 EL 24 TR**		**40 IR 24 TR**		**40 IL 24 TR**	

Carbide grade: BMA or MXC

Order example: 40 ER 18 TR BMA

External Holders

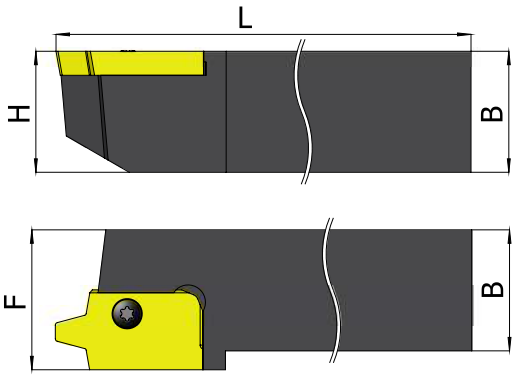



Pitch Range (mm) 14, 16, 18 Ordering Code		B=H	L	F	Insert Screw	Torx Screw	Holder No.
EX-RH	**SER 3232 P40**	32	170	32	S40	K40	H1
EX-LH	**SEL 3232 P40**	32	170	32	S40	K40	H2

Pitch Range (mm) 20, 22, 24 Ordering Code		B=H	L	F	Insert Screw	Side Screw	Torx Screw	Holder No.
EX-RH	**SER 3232 P40T**	32	170	32	S40	A27	K40	H3
EX-LH	**SEL 3232 P40T**	32	170	32	S40	A27	K40	H4

Pitch Range (mm) 14, 16, 18 Ordering Code		B=H	L	F	Insert Screw	Torx Screw	Holder No.
EX-RH	**SER 2525 M40**	25	150	32	S40	K40	*H5
EX-LH	**SEL 2525 M40**	25	150	32	S40	K40	*H6

* H5 and H6 toolholders to be used with toolbar provided by the customer

Internal Holders

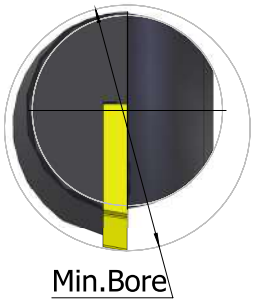



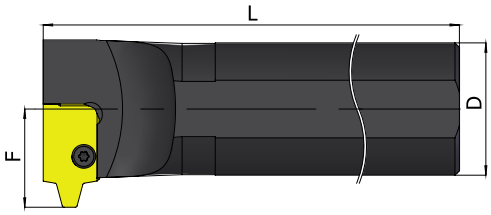

Pitch Range (mm) 14, 16, 18 Ordering Code		D	Min Bore Diam.	L	F	Insert Screw	Torx Screw	Holder No.
IN-RH	**SIR 0050 V40**	50	70	400	37	S40	K40	H7
IN-LH	**SIL 0050 V40**	50	70	400	37	S40	K40	H8

Pitch Range (mm) 20, 22, 24 Ordering Code		D	Min Bore Diam.	L	F	Insert Screw	Side Screw	Torx Screw	Holder No.
IN-RH	**SIR 0050 V40T**	50	70	400	37	S40	A27	K40	H9
IN-LH	**SIL 0050 V40T**	50	70	400	37	S40	A27	K40	H10

Large Profile Sagengewinde Inserts

DIN 513

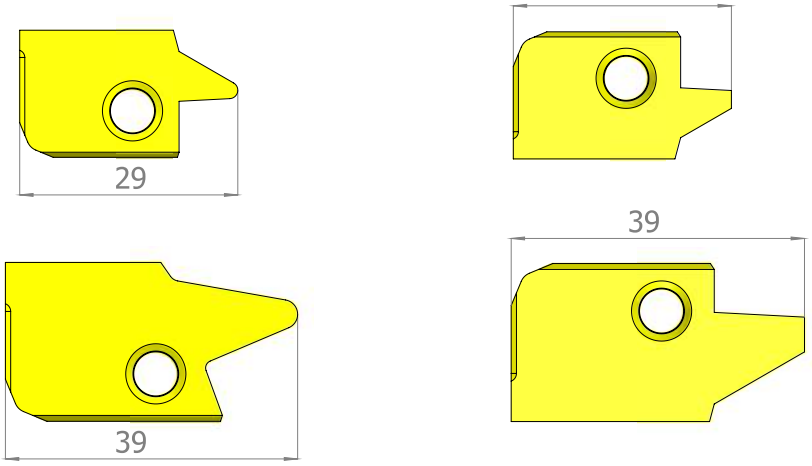

Pitch mm	Ordering Code EX RH	Holder Code	Ordering Code IN RH	Holder Code
9	**30 ER 9 SAGE**	S1, 2	**30 IR 9 SAGE**	S7
10	**40 ER 10 SAGE**	S3, 4	**40 IR 10 SAGE**	S8
12	**40 ER 12 SAGE**	S3, 4	**40 IR 12 SAGE**	S9
14	**40 ER 14 SAGE**	S5	**40 IR 14 SAGE**	S10
16	**40 ER 16 SAGE**	S6	**40 IR 16 SAGE**	S11

Carbide grade: BMA or MXC

Order example: 40 ER 10 SAGE MXC

Additional profiles upon request
Round (DIN 20400)
Acme, Stub Acme
American Buttress

External Holders

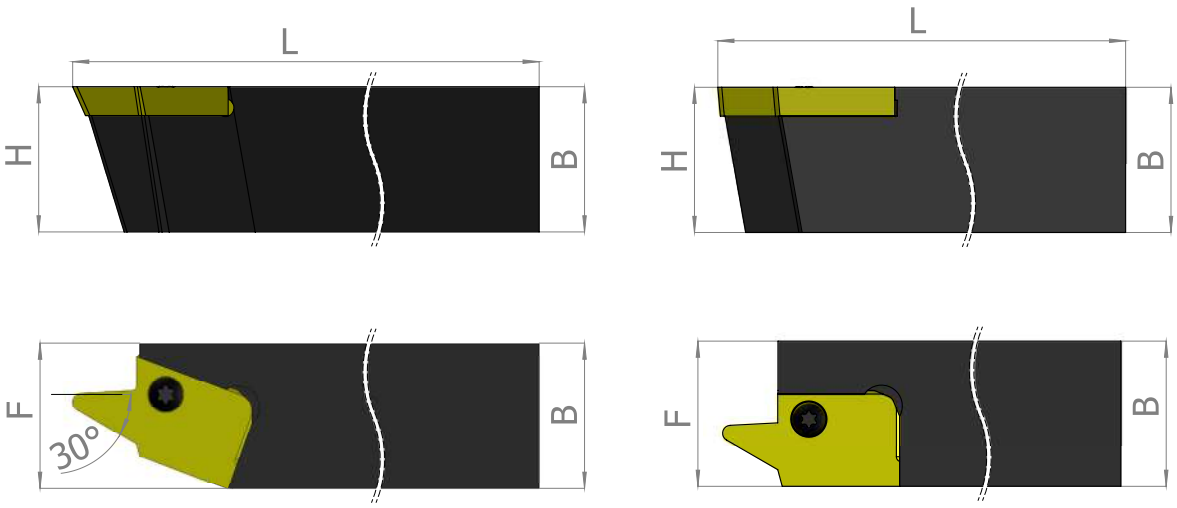

Version A

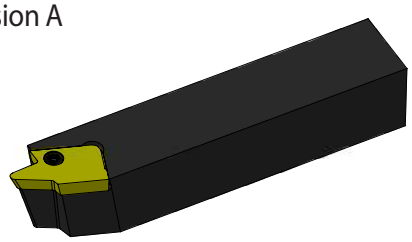

Version B

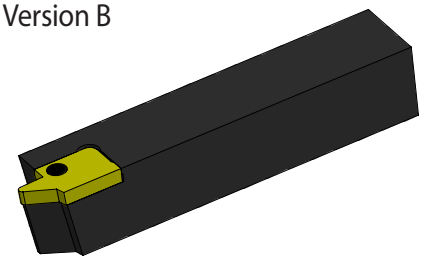

The flank with the large angle is the leading edge

Ordering Code		B=H	L	F	Insert Screw	Torx Screw	Version	Holder No.
EX-RH	**SER 2525 M30**	25	150	25	S30	K30	B	S1
	SER 3232 P30	32	170	32	S30	K30	B	S2
	SER 2525 M40T	25	150	32	S40	K40	B	S3
	SER 3232 P40S	32	170	32	S40	K40	B	S4
	SER 3232 P40W	32	170	32	S40	K40	B	S5
	SER 3232 P40Q	32	170	32	S40	K40	A	S6

Internal Holders

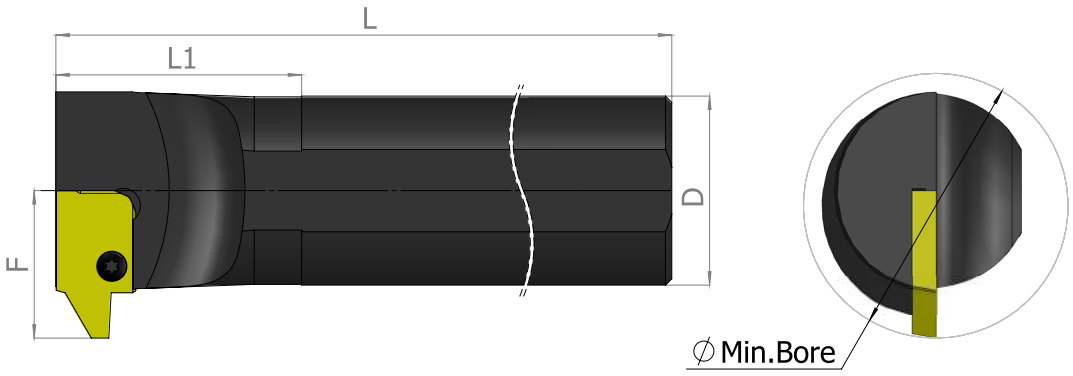

Ordering Code		D	Min Bore Diam.	L	L1	F	Insert Screw	Torx Screw	Holder No.
IN-RH	**SIR 0032 S30**	32	40.0	250	120	24.0	S30	K30	S7
	SIR 0040 T40	40	49.0	300	140	28.0	S40	K40	S8
	SIR 0050 U40	50	65.0	350	-	35.0	S40	K40	S9
	SIR 0060 V40	60	80.0	400	-	41.0	S40	K40	S10
	SIR 0060 V40T	60	80.0	400	-	43.0	S40	K40	S11

Thread Turning Toolholders and Kits

A02









Contents:	Page:
Product Identification	2
External Toolholders	3
Off-Set Toolholders	4
External Toolholders with Top Clamp	5
Vertical Toolholders	5
Slim Throat Toolholders	5
Drophead Toolholders	6
Gang Toolholders	6
X-tream Jet:	
External Toolholder with Internal Coolant	7
Internal Toolholders	8
Internal Toolholders with Coolant Bore	9
Internal Toolholders with Top Clamp	9
Toolholders with 3.5˚ Helix Angle	9
Special Thread Turning Applications	10
Carbide Shank Threading Bars	11
Vertical Toolholders	11

Contents:	Page:
Star Toolholders Ø22	12
Modular Line	13
Applications	14
Product Identification	15
ML Turning Adaptors	16
Boring Bars	16
Quick Change	17
External Toolholders	17
Internal Toolholders	18
Thread Helix Angle	19
Standard and Slanted Anvils	19
Anvil Kits	20
Standard Kits	21
Miniature & Ultra-Miniature Kits	21
Inserts' Kits	22
Threading & Boring Combination Kit	23

Product Identification

Threading Toolholders Ordering Codes

S	E	R	2020	K	16	

Clamping Method
D = Clamp
S = Screw

E = External
I = Internal

R = Right Hand
L = Left Hand

Shank Cross Section:
External toolholders square shank

2020 = 20 mm x 20 mm



Internal toolholders & boring bars round shank

0020 = Diam. of 20 mm



Length of Toolholder: mm

D	= 60
F	= 80
H	= 100
K	= 125
L	= 140
M	= 150
P	= 170
R	= 200
S	= 250
T	= 300
U	= 350
V	= 400

Insert Pocket Size

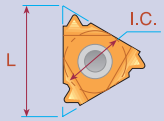

L	I.C.
06	5/32"
08	3/16"
08U	3/16"U
11	1/4"
16	3/8"
22	1/2"
22U	1/2"U
27	5/8"
27U	5/8"U
33U	3/4"U

B - With coolant bore
CB - Carbide shank
V - Vertical (on edge)
O - Offset style
D - Drop head
G - Gang tool
U - U-TYPE

External Toolholders

U-TYPE

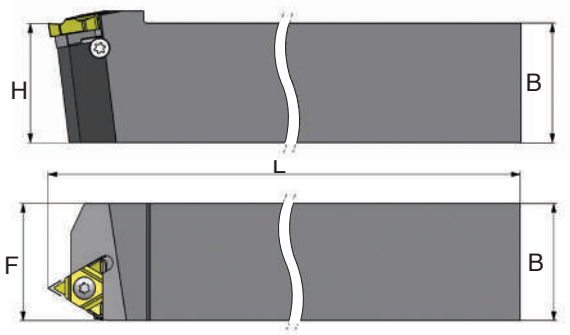

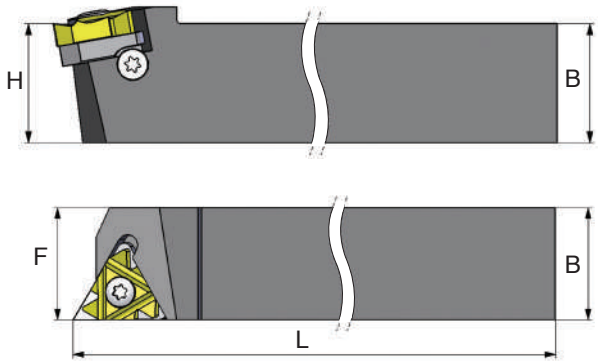

Ordering Code Right Hand	L	B=H	L	F	Insert Screw	Anvil Screw	Torx Key	RH Anvil	LH Anvil
*SER 8 8 H11	11	8	100	11	S11	-	K11	-	-
*SER 1010 H11	11	10	100	11	S11	-	K11	-	-
*SER 1010 M11	11	10	150	11	S11	-	K11	-	-
*SER 1212 K11	11	12	125	12	S11	-	K11	-	-
*SER 1212 M11	11	12	150	12	S11	-	K11	-	-
SER 1212 F16	16	12	80	16	S16	A16	K16	AE16	AI16
SER 1616 H16	16	16	100	16	S16	A16	K16	AE16	AI16
SER 2020 K16	16	20	125	20	S16	A16	K16	AE16	AI16
SER 2525 M16	16	25	150	25	S16	A16	K16	AE16	AI16
SER 3232 P16	16	32	170	32	S16	A16	K16	AE16	AI16
SER 2525 M22	22	25	150	25	S22	A22	K22	AE22	AI22
SER 3232 P22	22	32	170	32	S22	A22	K22	AE22	AI22
SER 4040 R22	22	40	200	40	S22	A22	K22	AE22	AI22
SER 2525 M22U	22U	25	150	28	S22	A22	K22	AE22U	AI22U
SER 3232 P22U	22U	32	170	32	S22	A22	K22	AE22U	AI22U
SER 4040 R22U	22U	40	200	40	S22	A22	K22	AE22U	AI22U
SER 2525 M27	27	25	150	32	S27	A27	K27	AE27	AI27
SER 3232 P27	27	32	170	32	S27	A27	K27	AE27	AI27
SER 4040 R27	27	40	200	40	S27	A27	K27	AE27	AI27
SER 2525 M27U	27U	25	150	32	S27	A27	K27	AE27U	AI27U
SER 3232 P27U	27U	32	170	32	S27	A27	K27	AE27U	AI27U
SER 4040 R27U	27U	40	200	40	S27	A27	K27	AE27U	AI27U
*SER 2525 M33U	33U	25	150	32	S33	-	K33	-	-
*SER 3232 P33U	33U	32	170	32	S33	-	K33	-	-

*Toolholders with no anvil
For **LEFT HAND** toolholders specify SE**L** instead of SE**R**

Toolholders are made with a **1.5˚ Helix Angle.** For other Helix Angles
please see helix angle chart (page A04-7) in the technical section of this catalog.

Off-Set Toolholders



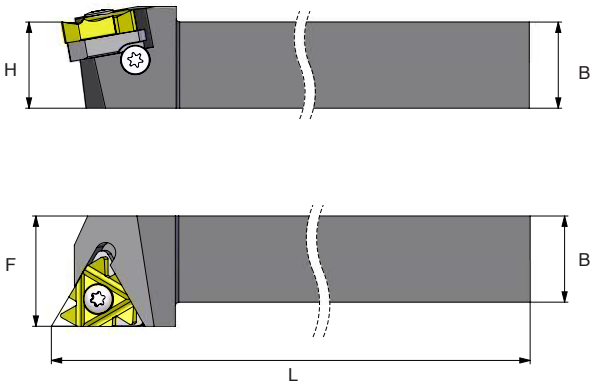

Ordering Code Right Hand	L	B=H	L	F	Insert Screw	Anvil Screw	Torx Key	RH Anvil	LH Anvil
SER 1212 F16-O	16	12	8	16	S16	A16	K16	AE16	AI16
SER 1616 H16-O	16	16	100	20	S16	A16	K16	AE16	AI16
SER 2020 K16-O	16	20	125	25	S16	A16	K16	AE16	AI16
SER 2525 M16-O	16	25	150	32	S16	A16	K16	AE16	AI16
SER 3232 P16-O	16	32	170	40	S16	A16	K16	AE16	AI16
SER 2525 M22-O	22	25	150	32	S22	A22	K22	AE22	AI22
SER 3232 P22-O	22	32	170	40	S22	A22	K22	AE22	AI22

Thread Turning Toolholders

External Toolholders With Top Clamp



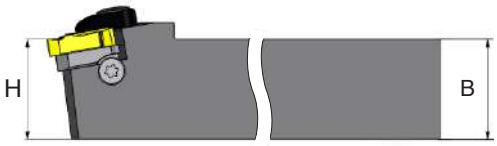

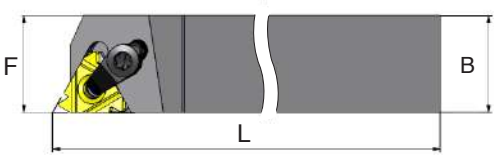

Ordering Code Right Hand	L	B=H	L	F	Insert Screw	Clamp	Anvil Screw	Torx Key	RH Anvil	LH Anvil
DER 1212 H16	16	12	100	16	S16	C16	A16S	K16	AE16	AI16
DER 1616 H16	16	16	100	16	S16	C16	A16S	K16	AE16	AI16
DER 2020 K16	16	20	125	20	S16	C16	A16S	K16	AE16	AI16
DER 2525 M16	16	25	150	25	S16	C16	A16S	K16	AE16	AI16
***DER 2525 M22**	22	25	150	25	S22	C22	A22	K22	AE22	AI22

For **LEFT HAND** toolholders specify DEL instead of DER
Toolholders are made with a **1.5° Helix Angle.** For other Helix Angles please see helix angle chart in the technical section of this catalog.
Two clamping methods can be used: screw or top clamp.
*Use K21 torx key for C22 clamp

Vertical Toolholders



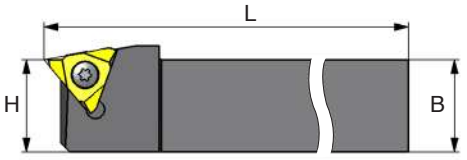



Ordering Code Right Hand		B=H	L	F	Insert Screw	Torx Key
SER 1616 H16V	16	16	100	18	S16S	K16
SER 2020 K16V	16	20	125	22	S16S	K16
SER 2525 M16V	16	25	150	27	S16S	K16
SER 2525 M22V	22	25	150	27.5	S22S	K22
SER 3232 P27V-T10	27	32	170	36	S27	K27

Slim Throat Toolholders



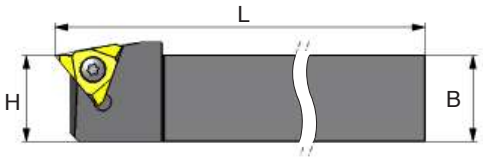

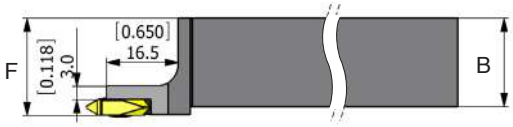

Ordering Code Right Hand		B=H	L	F	Insert Screw	Torx Key
SER 1616 H16VS	16	16	100	18	S16S	K16
SER 2020 K16VS	16	20	125	22	S16S	K16
SER 2525 M16VS	16	25	150	27	S16S	K16
SER 2525 M22VS	22	25	150	27	S22S	K22

Drophead Toolholders



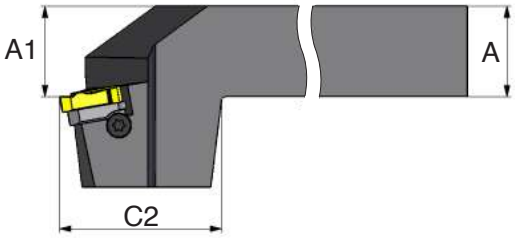

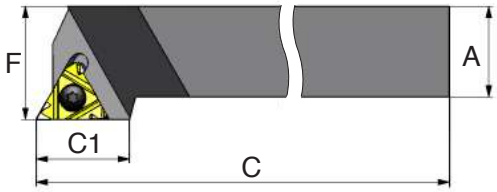

Ordering Code Right Hand	L	A	A1	C	C1	F	C2	Insert Screw	Anvil Screw	Torx Key	RH Anvil	LH Anvil
SER 2020 K16D	16	20	20	125	21.0	25	38	S16	A16	K16	AE16	AI16
SER 2525 M16D	16	25	25	150	21.0	32	38	S16	A16	K16	AE16	AI16
SER 2525 M22D	22	25	25	150	21.0	32	38	S22	A22	K22	AE22	AI22

Gang Toolholders

Gang Toolholders are External Holders, used in small automatic machines with a gang tool post.

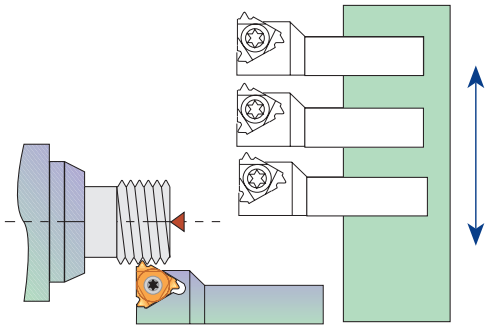

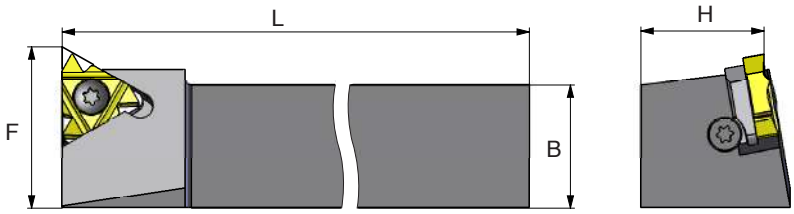

RIGHT HAND SHOWN



Ordering Code Right Hand	L	B=H	L	F	Insert Screw	Anvil Screw	Torx Key	RH Anvil	LH Anvil
***SER 8 8 H11G**	11	8	100	12.0	S11	-	K11	-	-
***SER 1010 H11G**	11	10	100	14.0	S11	-	K11	-	-
SER 1616 K16G	16	16	125	21.7	S16	A16	K16	AE16	AI16
SER 2020 K16G	16	20	125	26.2	S16	A16	K16	AE16	AI16

*Toolholders with no anvil
For **LEFT HAND** toolholders specify SE**L** instead of SE**R**

x-tream Jet

External Toolholder with Internal Coolant

CPT has developed a unique external thread turning holder with internal coolant to the cutting edge.
The holder includes two connecting options through an elbow fitting and a top clamp directing the coolant flow to the cutting edge.

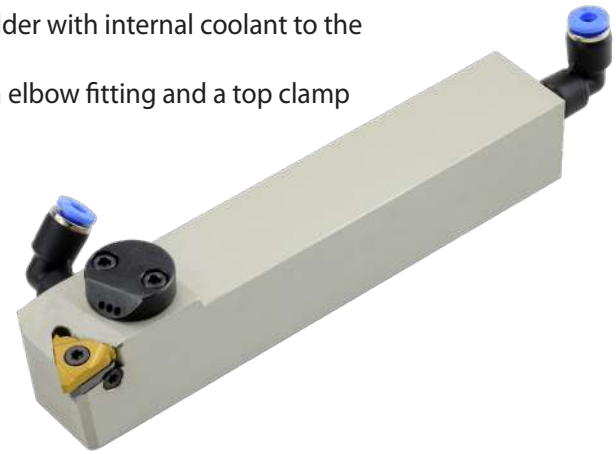

The coolant flow provides:

- Better chip control and chip flow
- Longer tool life and high performance
- Reduces the cutting edge temperature
- Available RH and LH toolholders
- Coated holders provide abrasive resistance

Demonstration

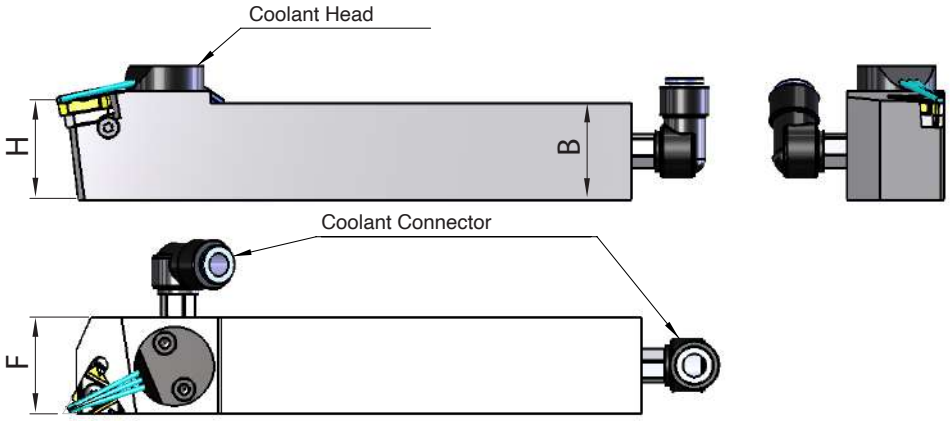

Ordering Code	L mm	B=H	L	F	Insert Screw Torx +	Anvil Screw Torx +	Key Torx +	RH Anvil	LH Anvil	Coolant head	Coolant* Connector mm
SER 1616 H16B	16	16	100	16	S16P	A16P	K16P	AE16	AI16	CH3	Ø4/Ø6
SER 2020 K16B	16	20	125	20	S16P	A16P	K16P	AE16	AI16	CH1	Ø4/Ø6
SER 2525 M16B	16	25	150	25	S16P	A16P	K16P	AE16	AI16	CH1	Ø4/Ø6
SER 2525 M22B	22	25	150	25	S22P	A22P	K22P	AE22	AI22	CH1	Ø4/Ø6
SER 2525 M27B	27	25	150	32	S27P	A27P	K27P	AE27	AI27	CH1	Ø4/Ø6
SER 3232 P16B	16	32	170	32	S16P	A16P	K16P	AE16	AI16	CH1	Ø4/Ø6
SER 3232 P22B	22	32	170	32	S22P	A22P	K22P	AE22	AI22	CH1	Ø4/Ø6
SER 3232 P27B	27	32	170	32	S27P	A27P	K27P	AE27	AI27	CH1	Ø4/Ø6

For **LEFT HAND** toolholders specify SE**L** instead of SE**R**
Toolholders made with 1.5° helix angle
Please consult the helix angle chart page A04-7 in the technical section of this catalog
* Standard packing with Ø6 mm

Internal Toolholders

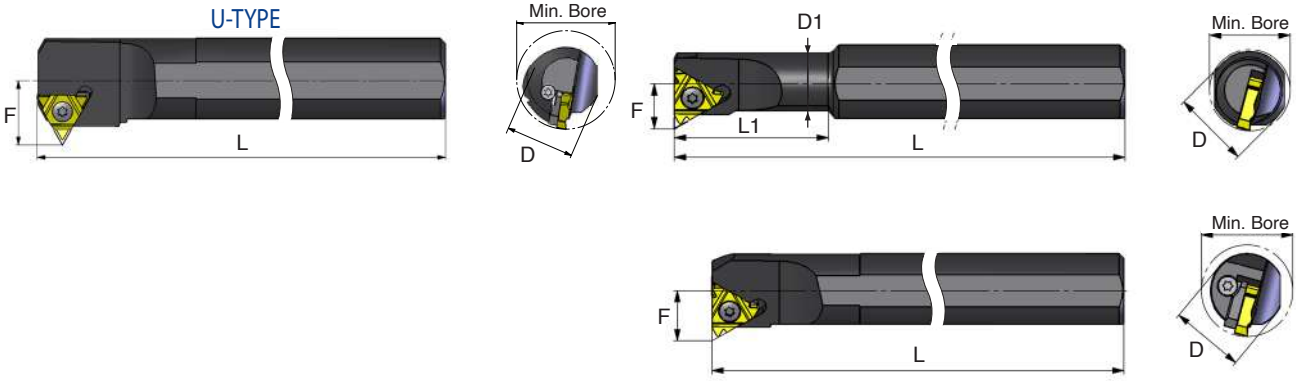

Ordering Code Right Hand	L	D	D1	Min Bore Diam.	L	L1	F	Insert Screw	Anvil Screw	Torx Key	RH Anvil	LH Anvil
*SIR 0005 H06	6	12	5.1	6.0	100	12	4.3	S06	-	K06	-	-
*SIR 0007 K08	8	16	6.6	7.8	125	18	5.3	S08	-	K08	-	-
*SIR 0008 K08U	8U	16	7.3	9.0	125	21	6.6	S08	-	K08	-	-
*SIR 0010 H11	11	10	10	12	100	-	7.4	S11	-	K11	-	-
*SIR 0010 K11	11	16	10	12	125	25	7.4	S11	-	K11	-	-
*SIR 0013 L11	11	16	13	15	140	32	8.9	S11	-	K11	-	-
*SIR 0013 M16	16	16	13	16	150	32	10.2	S16S	-	K16	-	-
*SIR 0016 P16	16	20	16	19	170	40	11.7	S16S	-	K16	-	-
SIR 0020 P16	16	20	20	24	170	-	13.7	S16	A16	K16	AI16	AE16
SIR 0025 R16	16	25	25	29	200	-	16.2	S16	A16	K16	AI16	AE16
SIR 0032 S16	16	32	32	36	250	-	19.7	S16	A16	K16	AI16	AE16
SIR 0040 T16	16	40	40	44	300	-	23.7	S16	A16	K16	AI16	AE16
SIR 0050 U16	16	50	50	54	350	-	28.7	S16	A16	K16	AI16	AE16
*SIR 0020 P22	22	20	20	24	170	-	15.6	S22S	-	K22	-	-
SIR 0025 R22	22	25	25	29	200	-	18.1	S22	A22	K22	AI22	AE22
SIR 0032 S22	22	32	32	38	250	-	21.6	S22	A22	K22	AI22	AE22
SIR 0040 T22	22	40	40	46	300	-	25.6	S22	A22	K22	AI22	AE22
SIR 0050 U22	22	50	50	56	350	-	30.6	S22	A22	K22	AI22	AE22
SIR 0032 S22U	22U	32	32	38	250	-	24.4	S22	A22	K22	AI22U	AE22U
SIR 0040 T22U	22U	40	40	46	300	-	28.1	S22	A22	K22	AI22U	AE22U
SIR 0050 U22U	22U	50	50	57	350	-	30.8	S22	A22	K22	AI22U	AE22U
SIR 0032 S27	27	32	32	40	250	-	22.6	S27	A27	K27	AI27	AE27
SIR 0040 T27	27	40	40	48	300	-	26.6	S27	A27	K27	AI27	AE27
SIR 0050 U27	27	50	50	58	350	-	31.6	S27	A27	K27	AI27	AE27
SIR 0060 V27	27	60	60	68	400	-	36.6	S27	A27	K27	AI27	AE27
SIR 0032 S27U	27U	32	32	40	250	-	25.8	S27	A27	K27	AI27U	AE27U
SIR 0040 T27U	27U	40	40	48	300	-	29.4	S27	A27	K27	AI27U	AE27U
SIR 0050 U27U	27U	50	50	58	350	-	34.4	S27	A27	K27	AI27U	AE27U
SIR 0060 V27U	27U	60	60	68	400	-	39.7	S27	A27	K27	AI27U	AE27U
*SIR 0050 U33U	33U	50	50	62	350	-	37.5	S33	-	K33	-	-

*Toolholders without anvil
For **LEFT HAND** toolholders specify SI**L** instead of SI**R**

Toolholders are made with a **1.5˚ Helix Angle.** For other Helix Angles please see helix angle chart (page A04-7) in the technical section of this catalog.

For "U" type inserts Tr, Acme, Stub Acme, see our software or contact main office for holder use.

Internal Toolholders with Coolant Bore



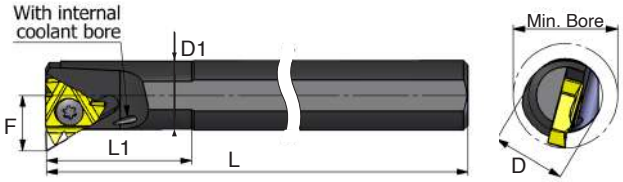

Ordering Code Right Hand	L	D	D1	Min Bore Diam.	L	L1	F	Insert Screw	Anvil Screw	Torx Key	RH Anvil	LH Anvil
***SIR 0010 K11B**	11	16	10	12	125	25	7.4	S11	-	K11	-	-
***SIR 0013 M16B**	16	16	13	16	150	32	10.2	S16S	-	K16	-	-
***SIR 0016 P16B**	16	20	16	19	170	40	11.7	S16S	-	K16	-	-
SIR 0020 P16B	16	20	20	24	170	-	13.7	S16	A16	K16	AI16	AE16
SIR 0025 R16B	16	25	25	29	200	-	16.2	S16	A16	K16	AI16	AE16
SIR 0025 R22B	22	25	25	29	200	-	18.1	S22	A22	K22	AI22	AE22
SIR 0032 S16B	16	32	32	36	250	-	19.7	S16	A16	K16	AI16	AE16

*Toolholders without anvil
For **LEFT HAND** toolholders specify SI**L** instead of SI**R**

Toolholders are made with a **1.5˚ Helix Angle.** For other Helix Angles
please see helix angle chart (page A04-7) in the technical section of this catalog.

Internal Toolholders with Top Clamp



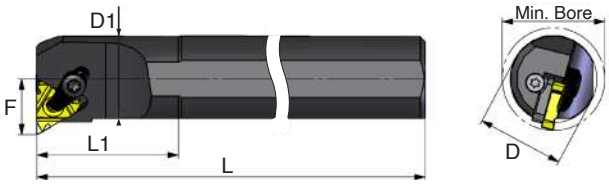

Ordering Code Right Hand	L	D	D1	Min Bore Diam.	L	L1	F	Insert Screw	Clamp	Anvil Screw	Torx Key	RH Anvil	LH Anvil
DIR 0020 P16	16	20	20	24	170	-	13.7	S16	C16	A16S	K16	AI16	AE16
DIR 0025 R16	16	25	25	29	200	-	16.2	S16	C16	A16S	K16	AI16	AE16
DIR 0032 S16	16	32	32	36	250	-	19.7	S16	C16	A16S	K16	AI16	AE16
*** DIR 0025 R22**	22	25	25	29	200	-	18.1	S22	C22	A22	K22	AI22	AE22

For **LEFT HAND** toolholders specify DI**L** instead of DI**R**
Two clamping methods can be used: screw or top clamp.
*Use K21 torx key for C22 clamp

Toolholders with 3.5˚ Helix Angle

Ordering Code Right Hand	L	D	D1	Min Bore Diam. mm	L	L1	F	Insert Screw	Torx Key
SIR 0016 P16B-3.5	16	20	16	19	170	40	13.7	S16S	K16
SIR 0020 P22B-3.5	22	20	20	24	170	-	15.6	S22S	K22

For **LEFT HAND** toolholders specify SI**L** instead of SI**R**

Special Thread Turning Applications

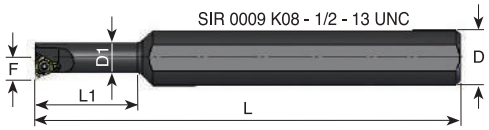

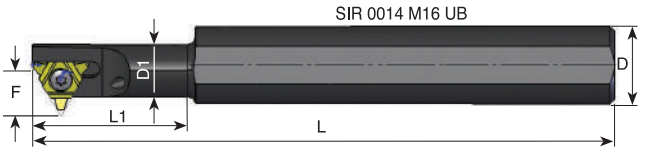



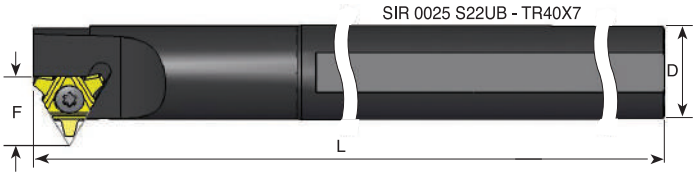

Ordering Code Right Hand		D	D1	L	L1	F	Thread	Insert Screw	Torx Key
***SIR 0009 K08**	8	16	8.7	125	30	6.5	**1/2 - 13UNC**	S08	K08
SIR 0012 L16B	16	20	11.5	140	33	10.5	**TR18x4**	S16S	K16
SIR 0014 L16B	16	20	12.5	140	36	21.1	**TR20x4**	S16S	K16
SIR 0014 M16UB	16	20	13.5	150	40	13.2	**TR22x5**	S16S	K16
SIR 0025 S22UB	22	25	-	250		19.5	**TR40x7**	S22S	K22

For LH holders call CPT
* Only right hand available

Carbide Shank Threading Bars

With coolant bore

Carbide Shank Threading Bars are used when chatter and deflection are expected due to long overhang in deep small bores.

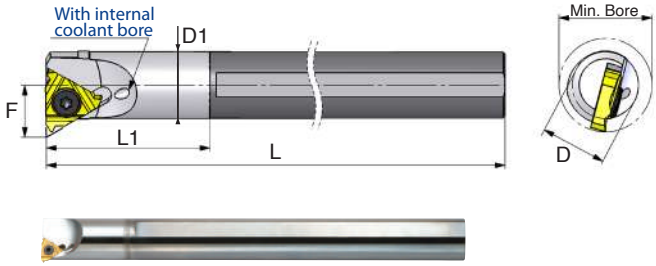

Ordering Code Right Hand	L	D	D1	Min Bore Diam.	L	L1	F	Insert Screw	Anvil Screw	Torx Key	RH Anvil	LH Anvil
SIR 0005 H06CB	6	6	5.1	6.0	100	26	4.3	S06	-	K06	-	-
SIR 0007 K08CB	8	8	6.6	7.8	125	31	5.3	S08	-	K08	-	-
SIR 0008 K08UCB	8U	8	7.3	9.0	125	35	6.6	S08	-	K08	-	-
SIR 0010 M11CB	11	10	10	12	150	-	7.4	S11	-	K11	-	-
SIR 0012 P11CB	11	12	12	15	170	-	8.4	S11	-	K11	-	-
SIR 0016 R16CB	16	16	16	19	200	-	11.7	S16S	-	K16	-	-
***SIR 0020 S16CB**	16	20	20	24	250	-	13.7	S16	A16	K16	AI16	AE16
***SIR 0025 S16CB**	16	25	25	29	250	-	16.2	S16	A16	K16	AI16	AE16
****SIR 0020 S22CB**	22	20	19.3	24	250	100	15.6	S22	-	K22	-	-

* Carbide shank threading bars with anvil
** Helix angle: 3.5˚
For **LEFT HAND** toolholders specify SI**L** instead of SI**R**

Vertical Toolholders

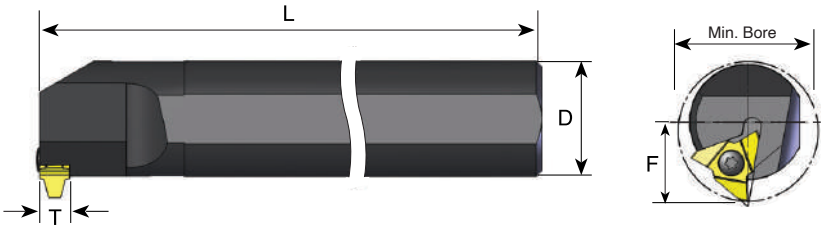

Ordering Code Right Hand	L	D	* Min Bore Diam.	L	F	Insert Screw	Torx Key
SIR 0040T27V-T10	27	40	48	300	29	S27	K27
SIR 0050U27V-T10	27	50	58	350	34	S27	K27

* To be compared with given minimum bore profile.
For **LEFT HAND** toolholders specify SI**L** instead of SI**R**

Star Toolholders Ø22



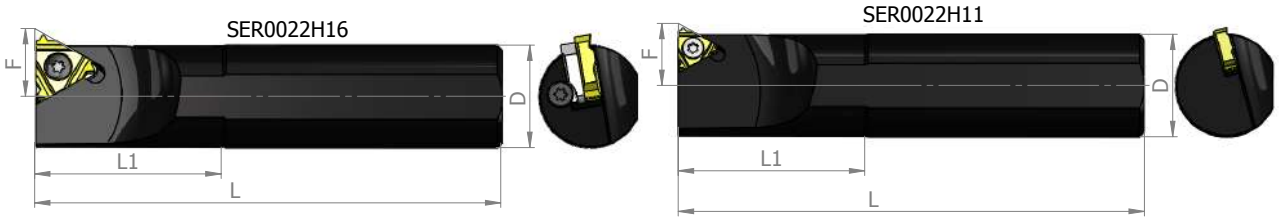

Ordering Code Right Hand		D	L	L1	F	Insert Screw	Anvil Screw	Torx Key	RH Anvil	LH Anvil
SER 0022 H11	11	22	100	40	13.3	S11	-	K11	-	-
SER 0022 H16	16	22	100	40	14.6	S16	A16	K16	AE16	AI16

For **LEFT HAND** toolholders specify SE**L** instead of SE**R**

Modular Line

Turning adaptors and boring bars for internal applications of threading and grooving.



Demonstration

Advantages

- High accurate turning ML adaptors provide full flexibility and easy adjustment.
- Full repeatability.
- A single boring bar fits to multi ML adaptors.
- Reduces tool inventories - investing in a single boring bar, right and left hand ML adaptors from the same size.
- ML adaptors support all CPT standard thread turning inserts sizes 16, 22 and 27 mm. Grooving inserts size 16 mm fit the MLR/L 16 - 32 and MLR / L 16 - 40 adaptors.
- ML adaptors are coated with a high abrasive resistant nickel layer to prolong the ML adaptors tool life.

Applications

- Internal machining
- Deep threads require high overhang with maximum rigidity
- Grooving
- Can be used on a large range of turning or multi-task machines

High pressure coolant

ML boring bars and adaptors are designed with internal coolant allowing high pressure up to 120 bar.

High pressure coolant reduces the cutting edge temperature, provides a better chip evacuation and improves tool life.

The tools can also be used with normal coolant pressure.

Applications

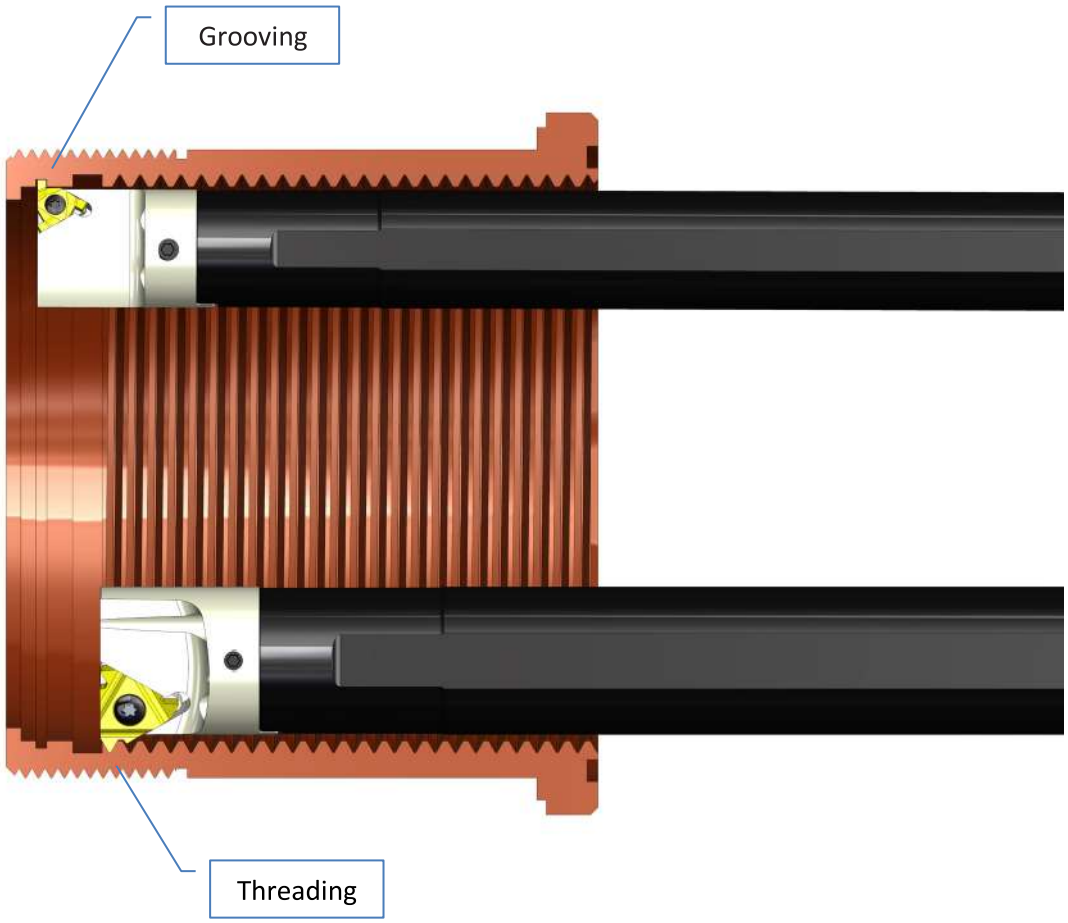

- Maximum overhang: 4 x D

Product Identification

ML Turning adaptors

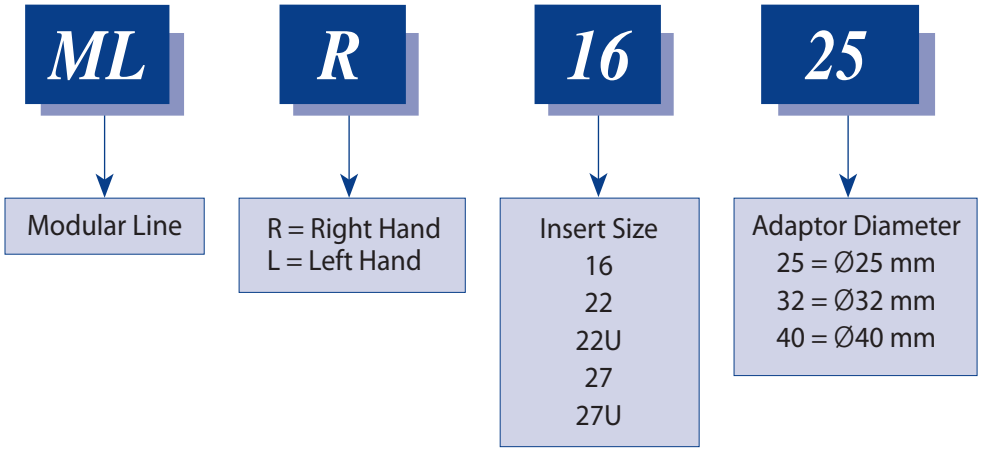

Boring Bars

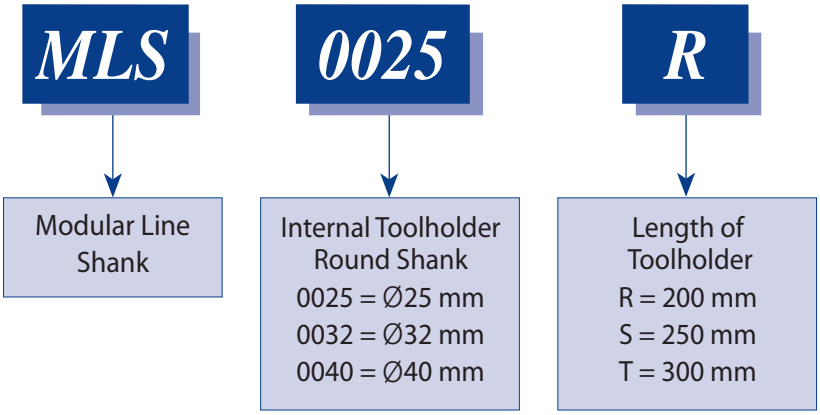

ML Turning Adaptors

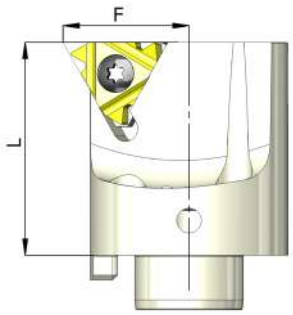

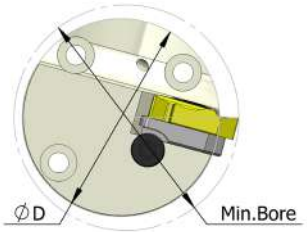



D	Ordering Code	L	I.C. in	Min Bore Diam.	L	F	Insert Screw	Anvil Screw	Torx Key	RH Anvil	LH Anvil
25	*MLR 16 - 25	16	3/8	29	30	16.2	S16P	-	K16P	-	-
25	*MLR 22 - 25	22	1/2	29	30	18.1	S22P	-	K22P	-	-
32	MLR 16 - 32	16	3/8	36	43	19.7	S16P	A16P	K16P	AI16	AE16
32	MLR 22 - 32	22	1/2	38	43	21.6	S22P	A22P	K22P	AI22	AE22
32	MLR 22U - 32	22U	1/2U	38	43	24.4	S22P	A22P	K22P	AI22U	AE22U
40	MLR 16 - 40	16	3/8	44	43	23.7	S16P	A16P	K16P	AI16	AE16
40	MLR 22 - 40	22	1/2	46	43	25.6	S22P	A22P	K22P	AI22	AE22
40	MLR 22U - 40	22U	1/2U	46	43	28.1	S22P	A22P	K22P	AI22	AE22
40	MLR 27 - 40	27	5/8	48	43	26.6	S27P	A27P	K27P	AI27	AE27
40	MLR 27U - 40	27U	5/8U	48	43	29.4	S27P	A27P	K27P	AI27U	AE27U

*Toolholders with no anvil
For **LEFT HAND** toolholders specify ML**L** instead of ML**R**

Boring Bars



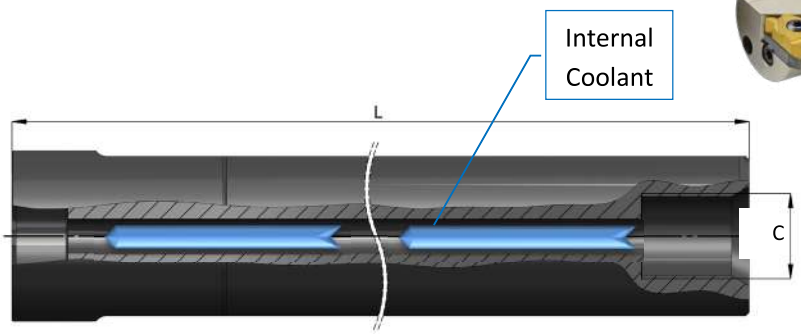

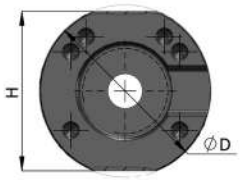

D	Ordering Code	L	H	C	Screw	Key
25	MLS 0025 R	200	23	G1/4"	S420, S435	K3
32	MLS 0032 S	250	30	G3/8"	S520, S550	K4
40	MLS 0040 T	300	36	G1/2"	S520, S550	K4

External ML adaptors (for external threads) are available upon request and can be used on the same MLS boring bars.

Quick Change *Polygon Threading Toolholders*

- Polygon shank
- ISO standard (26623) compliant for toolholding systems
- Polygon taper ensures automatic radial centering and even pressure around the coupling
- Enable quick tool changes ISO standard coupling system with a 1.4 degree tapered polygon shank design
- Interchangeable with leading manufacturers

External Toolholders



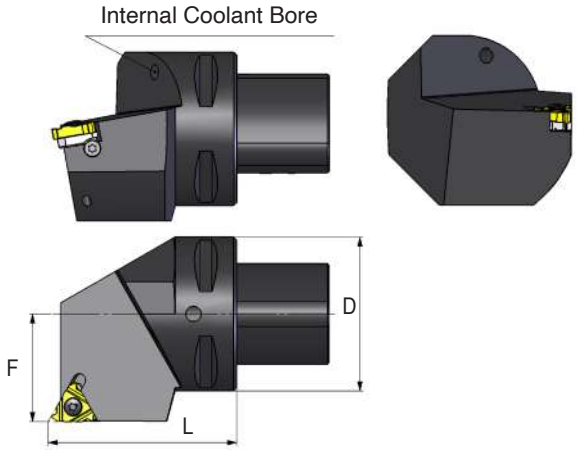

Equivalent to...	Ordering Code		D	F	L	Insert Screw	Anvil Screw	Torx key	RH Anvil	LH Anvil
C4	**P40-SER 27050-16**	16	40	27	50	S16	A16	K16	AE16	AI16
C5	**P50-SER 35060-16**	16	50	35	60	S16	A16	K16	AE16	AI16
C6	**P63-SER 45065-16**	16	63	45	65	S16	A16	K16	AE16	AI16
C4	**P40-SER 27050-22**	22	40	27	50	S22	A22	K22	AE22	AI22
C5	**P50-SER 35060-22**	22	50	35	60	S22	A22	K22	AE22	AI22
C6	**P63-SER 45065-22**	22	63	45	65	S22	A22	K22	AE22	AI22
C8	**P80-SER 55080-16**	16	80	55	80	S16	A16	K16	AE16	AI16
C8	**P80-SER 55080-22**	22	80	55	80	S22	A22	K22	AE22	AI22
C6	**P63-SER 45065-27**	27	63	45	65	S27	A27	K27	AE27	AI22

For **LEFT HAND** toolholders specify SE**L** instead of SE**R**

Internal Toolholders



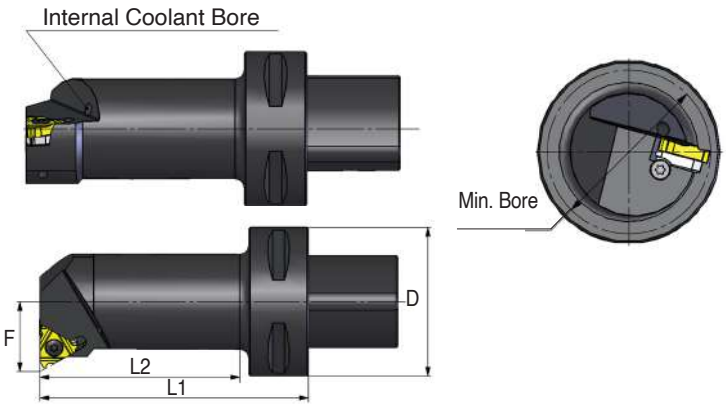

Equivalent to...	Ordering Code		D	F	Min. Bore Dia.	L1	L2	Insert Screw	Anvil Screw	Torx key	RH Anvil	LH Anvil
C4	* P40-SIR 12060-16	16	40	11.7	20	60	37	S16	-	K16	-	-
	P40-SIR 14060-16	16	40	13.5	25	60	38	S16	A16	K16	AI16	AE16
	P40-SIR 17070-16	16	40	16.0	29	70	48	S16	A16	K16	AI16	AE16
	P40-SIR 22090-16	16	40	19.5	36	90	69	S16	A16	K16	AI16	AE16
	P40-SIR 27080-16	16	40	23.5	44	80	60	S16	A16	K16	AI16	AE16
C5	* P50-SIR 12060-16	16	50	11.7	20	60	35	S16	-	K16	-	-
	P50-SIR 14060-16	16	50	13.5	25	60	36	S16	A16	K16	AI16	AE16
	P50-SIR 17070-16	16	50	16.0	29	70	47	S16	A16	K16	AI16	AE16
	P50-SIR 22090-16	16	50	19.5	36	90	68	S16	A16	K16	AI16	AE16
	P50-SIR 27105-16	16	50	23.5	44	105	84	S16	A16	K16	AI16	AE16
C6	P63-SIR 14070-16	16	63	13.5	25	70	42	S16	A16	K16	AI16	AE16
	P63-SIR 17075-16	16	63	16.0	29	75	48	S16	A16	K16	AI16	AE16
	P63-SIR 22090-16	16	63	19.5	36	90	64	S16	A16	K16	AI16	AE16
	P63-SIR 27105-16	16	63	23.5	44	105	80	S16	A16	K16	AI16	AE16
C4	* P40-SIR 15065-22	22	40	15.4	25	65	42	S22	-	K22	-	-
	P40-SIR 19070-22	22	40	17.9	29	70	48	S22	A22	K22	AI22	AE22
	P40-SIR 22090-22	22	40	21.4	38	90	69	S22	A22	K22	AI22	AE22
	P40-SIR 27080-22	22	40	25.4	46	80	60	S22	A22	K22	AI22	AE22
C5	* P50-SIR 15065-22	22	50	15.4	25	65	41	S22	-	K22	-	-
	P50-SIR 19070-22	22	50	17.9	29	70	47	S22	A22	K22	AI22	AE22
	P50-SIR 22090-22	22	50	21.4	38	90	68	S22	A22	K22	AI22	AE22
	P50-SIR 27105-22	22	50	25.4	46	105	84	S22	A22	K22	AI22	AE22
C6	P63-SIR 19075-22	22	63	17.9	29	75	48	S22	A22	K22	AI22	AE22
	P63-SIR 22090-22	22	63	21.4	38	90	64	S22	A22	K22	AI22	AE22
	P63-SIR 27105-22	22	63	25.4	46	105	80	S22	A22	K22	AI22	AE22

For **LEFT HAND** toolholders specify SI**L** instead of SI**R**

* Holders without anvil

Thread Helix Angle

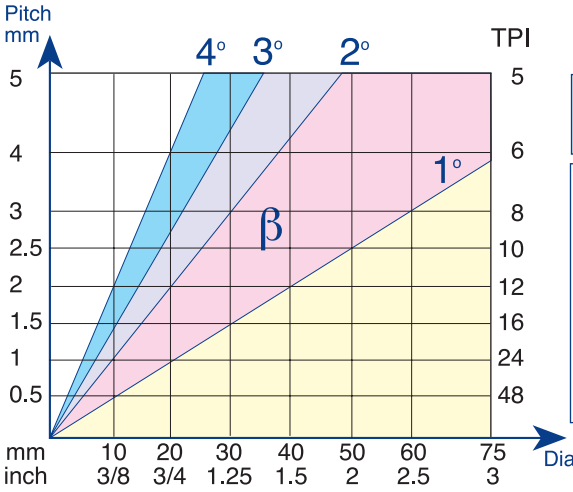

$$\tan\beta = \frac{P}{\pi \times D}$$

Simplified formula
$\beta = 20P/D$

Example:

D = 30 mm (1.18")
P = 1.5 mm (16 TPI)

$$\beta = \frac{20 \times 1.5}{30} = 1^{\circ}$$

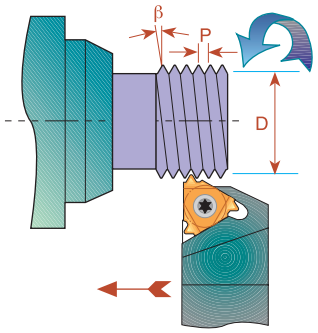

Standard and Slanted Anvils

CPT Toolholder Pockets have a built in 1.5° helix angle. This angle may be adjusted to better match the thread helix angle by simply changing the anvil.

Negative helix is usually used when threading RH thread with LH Holder or LH thread with RH Holder.

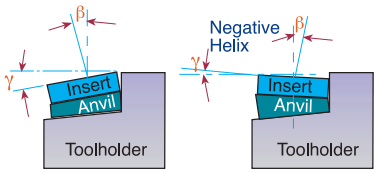

L	IC	Pocket Angle γ →	4.5°	3.5°	2.5°	1.5° Standard	0.5°	-0.5°	-1.5°
16	3/8	EX-RH OR IN-LH	AE16+4.5	AE16+3.5	AE16+2.5	**AE16**	AE16+0.5	AE16-0.5	AE16-1.5
16	3/8	EX-LH OR IN-RH	AI 16+4.5	AI 16+3.5	AI 16+2.5	**AI 16**	AI 16+0.5	AI 16-0.5	AI 16-1.5
22	1/2	EX-RH OR IN-LH	AE22+4.5	AE22+3.5	AE22+2.5	**AE22**	AE22+0.5	AE22-0.5	AE22-1.5
22	1/2	EX-LH OR IN-RH	AI 22+4.5	AI 22+3.5	AI 22+2.5	**AI 22**	AI 22+0.5	AI 22-0.5	AI 22-1.5
22U	1/2U	EX-RH OR IN-LH	AE22U+4.5	AE22U+3.5	AE22U+2.5	**AE22U**	AE22U+0.5	AE22U-0.5	AE22U-1.5
22U	1/2U	EX-LH OR IN-RH	AI 22U+4.5	AI 22U+3.5	AI 22U+2.5	**AI 22U**	AI 22U+0.5	AI 22U-0.5	AI 22U-1.5
27	5/8	EX-RH OR IN-LH	AE27+4.5	AE27+3.5	AE27+2.5	**AE27**	AE27+0.5	AE27-0.5	AE27-1.5
27	5/8	EX-LH OR IN-RH	AI 27+4.5	AI 27+3.5	AI 27+2.5	**AI 27**	AI 27+0.5	AI 27-0.5	AI 27-1.5
27U	5/8U	EX-RH OR IN-LH	AE27U+4.5	AE27U+3.5	AE27U+2.5	**AE27U**	AE27U+0.5	AE27U-0.5	AE27U-1.5
27U	5/8U	EX-LH OR IN-RH	AI 27U+4.5	AI 27U+3.5	AI 27U+2.5	**AI 27U**	AI 27U+0.5	AI 27U-0.5	AI 27U-1.5

Anvil Kits

5 AE and 5 AI anvils with various helix angles





AE (FOR EX.RH. & IN.LH.)



AI (FOR IN.RH. & EX.LH.)

Ordering Code	Contents				
KA16	AE16+4.5 AI 16+4.5	AE16+3.5 AI 16+3.5	AE16+2.5 AI 16+2.5	AE16+0.5 AI 16+0.5	AE16-1.5 AI 16-1.5
KA22	AE22+4.5 AI 22+4.5	AE22+3.5 AI 22+3.5	AE22+2.5 AI 22+2.5	AE22+0.5 AI 22+0.5	AE22-1.5 AI 22-1.5
KA22U	AE22U+4.5 AI 22U+4.5	AE22U+3.5 AI 22U+3.5	AE22U+2.5 AI 22U+2.5	AE22U+0.5 AI 22U+0.5	AE22U-1.5 AI 22U-1.5
KA27	AE27+4.5 AI 27+4.5		AE27+2.5 AI 27+2.5		AE27-1.5 AI 27-1.5
KA27U	AE27U+4.5 AI 27U+4.5		AE27U+2.5 AI 27U+2.5		AE27U-1.5 AI 27U-1.5

Standard Kits

Threading Kits are a versatile solution for users that cut a variety of thread types in limited quantity and do not want to sacrifice thread quality.

External ISO Kit
Ordering Code: KEG

INSERTS
16 ER A60 P25C
16 ER G60 P25C
16 ER 0.75 ISO P25C
16 ER 1.0 ISO P25C
16 ER 1.25 ISO P25C
16 ER 1.5 ISO P25C
16 ER 1.75 ISO P25C
16 ER 2.0 ISO P25C
16 ER 2.5 ISO P25C
16 ER 3.0 ISO P25C
TOOLHOLDERS
SER 2020 K16
KEY
K16
SCREW
S16

Internal ISO Kit
Ordering Code: KIG

INSERTS
16 IR A60 P25C
16 IR G60 P25C
16 IR 0.75 ISO P25C
16 IR 1.0 ISO P25C
16 IR 1.25 ISO P25C
16 IR 1.5 ISO P25C
16 IR 1.75 ISO P25C
16 IR 2.0 ISO P25C
16 IR 2.5 ISO P25C
16 IR 3.0 ISO P25C
TOOLHOLDERS
SIR 0020 P16
KEY
K16
SCREW
S16



If a larger toolholder with a 25 mm shank is required, add to the kit 25. For example: KIG - 25
BMA grade is also available. For example: KEG - BMA

Miniature & Ultra-Miniature Kits



Ordering Code	Type	No. of Inserts	Contents Inserts	Contents Boring Bar	Contents Key
KU60M - BXC	ULTRA	10	06 IR A60 BXC	SIR 0005 H06	K6
KM60M - BXC	MINI	10	08 IR A60 BXC	SIR 0007 K08	K8

Inserts' Kits

Type B Kits

Type B threading inserts.
A combination of ground profile and sintered chip-breaker threading inserts.
BMA Grade: Sub-Micron carbide grade with TiAlN multi-layer Coating.

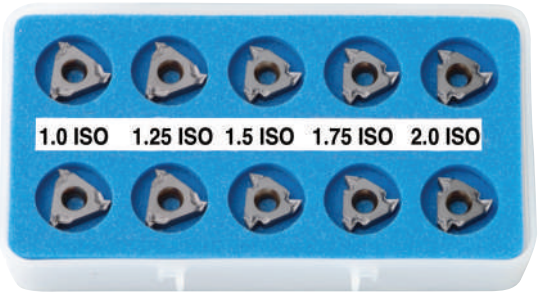

EXTERNAL ISO KIT
KEMB - BMA

16 ER B 1.0 ISO BMA-2 Pcs
16 ER B 1.25 ISO BMA-2 Pcs
16 ER B 1.5 ISO BMA-2 Pcs
16 ER B 1.75 ISO BMA-2 Pcs
16 ER B 2.0 ISO BMA-2 Pcs

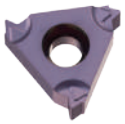

EX-RH

INTERNAL ISO KIT
KIMB - BMA

16 IR B 1.0 ISO BMA-2 Pcs
16 IR B 1.25 ISO BMA-2 Pcs
16 IR B 1.5 ISO BMA-2 Pcs
16 IR B 1.75 ISO BMA-2 Pcs
16 IR B 2.0 ISO BMA-2 Pcs

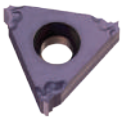

IN-RH

Standard Inserts' Kits

EXTERNAL ISO KIT

16 ER 1.0 ISO-2 Pcs
16 ER 1.25 ISO-2 Pcs
16 ER 1.5 ISO-2 Pcs
16 ER 1.75 ISO-2 Pcs
16 ER 2.0 ISO-2 Pcs

INTERNAL ISO KIT

16 IR 1.0 ISO-2 Pcs
16 IR 1.25 ISO-2 Pcs
16 IR 1.5 ISO-2 Pcs
16 IR 1.75 ISO-2 Pcs
16 IR 2.0 ISO-2 Pcs

Ordering Code: KEM

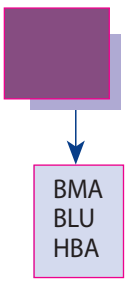

Ordering Code: KIM

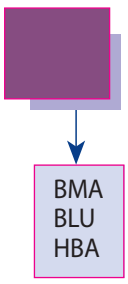

Threading & Boring Combination Kit

A practical and convenient combination kit for Ultra Miniature Threading and Boring. It enables Boring and Threading of mini bores as small as 6 mm diameter (1/4") with just one deep reaching Carbide shank ultra mini Boring Bar.



Ordering Code	Contents			
	Threading Insert	Turning Inserts	Boring Bar	Key
KC6TM	06 IR A60 BXC 10 Pcs	06 IR TURN BMA 10 Pcs	SIR 0005 H06CB	K6

BMA - Coated carbide grade for medium to high cutting speeds
BXC - Coated carbide grade for low cutting speed - 40 to 90 m/min
CB - Carbide shank boring bar with coolant bore

Double Sided Thread Turning Inserts & Toolholders

Demonstration

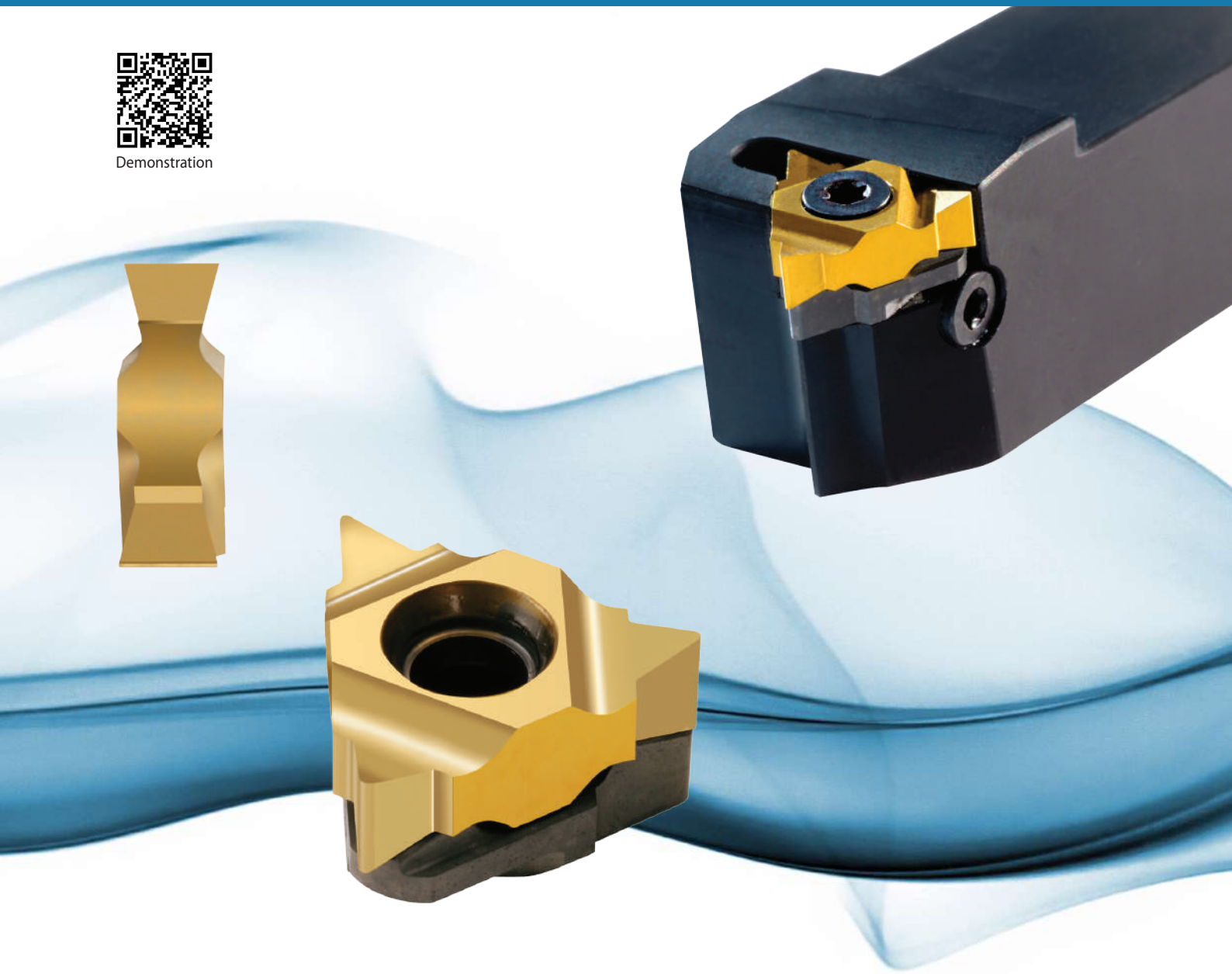

A unique line of 2 sided inserts including 6 cutting edges, a cost saving tool.

Advantages of DSI-Thread Turning Inserts

- Increased productivity thanks to the six cutting edges.
- U-Style inserts for a wide range of full or partial profile standard threads.
- Same insert for right hand or left hand thread.
- Saving on tooling costs.
- Unique anti-vibration anvil designed for clamping the insert and supporting the cutting edge.
- Simple insert's mounting and cutting edge indexing.
- Heavy duty toolholders designed specially for this line.

Contents:	Page:	Contents:	Page:
Product Identification	2	Whitworth 55°	5
Partial Profile 60°	3	NPT	5
Partial Profile 55°	3	Heavy Duty Thread Turning Toolholders - External	6
ISO	4	Heavy Duty Thread Turning Toolholders - Internal	6
UN	4		

Product Identification

DSI Ordering Code

16U — 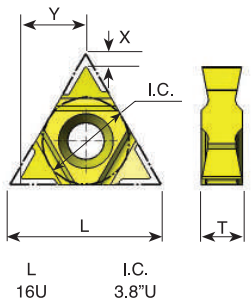

E — E=External
I = Internal

R/L — R = Right Hand
L = Left Hand

1.5 — Pitch
mm:
1.5-5.0
inch - TPI:
16-5

ISO — **Full Profiles:**
ISO
UN
WHIT
NPT
Partial Profiles:
G60 G55
AG60 AG55
N60 N55

6 — Inserts with 6 cutting edges

BMA — Grade:
MXC
BMA

S — Clamping Method
S = Screw

E — E = External
I = Internal

R — R = Right Hand
L = Left Hand

2020 — **Shank Cross Section:**
External toolholders square shank
2020= 20 mm x 20 mm



Internal toolholders & boring bars round shank
0020 = Diam. of 20 mm



K — Length of Toolholders:
K = 125 mm
M = 150 mm
P = 170 mm
R = 200 mm

16U — 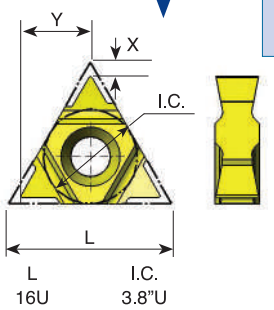

B: with internal coolant bore

6 — **6 -** for DSI Thread Turning Insert

Partial Profile 60°

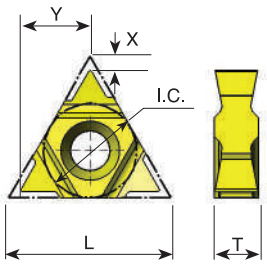

Pitch Range mm	Pitch Range TPI	L	I.C. in	EXTERNAL Ordering Code	INTERNAL Ordering Code	X	Y	T
1.75 - 3.0	14-8	16U	3/8U	**16U ER/L G60-6**	**16U IR/L G60-6**	1.4	7.1	4.5
0.5 - 3.0	48-8	16U	3/8U	**16U ER/L AG60-6**	**16U IR/L AG60-6**	1.4	7.1	4.5
3.5 - 5.0	7-5	16U	3/8U	**16U ER/L N60-6**	**16U IR/L N60-6**	1.2	7.3	4.5

Available grades: BMA or MXC
Order example: 16U ER/L G60-6 BMA

Partial Profile 55°

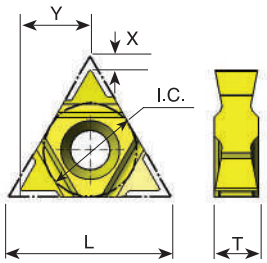

Pitch Range mm	Pitch Range TPI	L	I.C. in	EXTERNAL Ordering Code	INTERNAL Ordering Code	X	Y	T
1.75 - 3.0	14-8	16U	3/8U	**16U ER/L G55-6**	**16U IR/L G55-6**	1.4	7.1	4.5
0.5 - 3.0	48-8	16U	3/8U	**16U ER/L AG55-6**	**16U IR/L AG55-6**	1.4	7.1	4.5
3.5 - 5.0	7-5	16U	3/8U	**16U ER/L N55-6**	**16U IR/L N55-6**	1.2	7.3	4.5

Available grades: BMA or MXC

For carbide grade and cutting speed see page A04-2 and 3

ISO

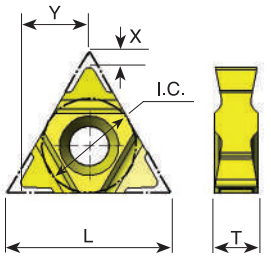

Pitch mm	L	I.C. in	EXTERNAL Ordering Code	INTERNAL Ordering Code	X	Y	T
1.5	16U	3/8U	16U ER/L 1.5 ISO-6	16U IR/L 1.5 ISO-6	1.6	6.9	4.5
1.75	16U	3/8U	16U ER/L 1.75 ISO-6	16U IR/L 1.75 ISO-6	1.6	6.9	4.5
2.0	16U	3/8U	16U ER/L 2.0 ISO-6	16U IR/L 2.0 ISO-6	1.6	6.9	4.5
2.5	16U	3/8U	16U ER/L 2.5 ISO-6	16U IR/L 2.5 ISO-6	1.6	6.9	4.5
3.0	16U	3/8U	16U ER/L 3.0 ISO-6	16U IR/L 3.0 ISO-6	1.6	6.9	4.5
3.5	16U	3/8U	16U ER/L 3.5 ISO-6	16U IR/L 3.5 ISO-6	1.6	6.9	4.5
4.0	16U	3/8U	16U ER/L 4.0 ISO-6	16U IR/L 4.0 ISO-6	1.6	6.9	4.5
4.5	16U	3/8U	16U ER/L 4.5 ISO-6	16U IR/L 4.5 ISO-6	1.6	6.9	4.5
5.0	16U	3/8U	16U ER/L 5.0 ISO-6	16U IR/L 5.0 ISO-6	1.6	6.9	4.5

Available grades: BMA or MXC
Order example: 16U ER/L 1.75 ISO-6 BMA

UN - Unified UNC, UNF, UNEF, UNS

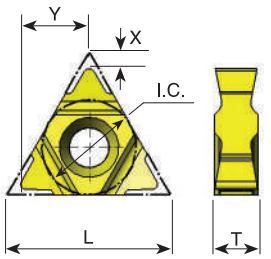

Pitch TPI	L	I.C. in	EXTERNAL Ordering Code	INTERNAL Ordering Code	X	Y	T
16	16U	3/8U	16U ER/L 16 UN-6	16U IR/L 16 UN-6	1.6	6.9	4.5
14	16U	3/8U	16U ER/L 14 UN-6	16U IR/L 14 UN-6	1.6	6.9	4.5
13	16U	3/8U	16U ER/L 13 UN-6	16U IR/L 13 UN-6	1.6	6.9	4.5
12	16U	3/8U	16U ER/L 12 UN-6	16U IR/L 12 UN-6	1.6	6.9	4.5
11.5	16U	3/8U	16U ER/L 11.5 UN-6	16U IR/L 11.5 UN-6	1.6	6.9	4.5
11	16U	3/8U	16U ER/L 11 UN-6	16U IR/L 11 UN-6	1.6	6.9	4.5
10	16U	3/8U	16U ER/L 10 UN-6	16U IR/L 10 UN-6	1.6	6.9	4.5
9	16U	3/8U	16U ER/L 9 UN-6	16U IR/L 9 UN-6	1.6	6.9	4.5
8	16U	3/8U	16U ER/L 8 UN-6	16U IR/L 8 UN-6	1.6	6.9	4.5
7	16U	3/8U	16U ER/L 7 UN-6	16U IR/L 7 UN-6	1.6	6.9	4.5
6	16U	3/8U	16U ER/L 6 UN-6	16U IR/L 6 UN-6	1.6	6.9	4.5
5	16U	3/8U	16U ER/L 5 UN-6	16U IR/L 5 UN-6	1.6	6.9	4.5

Available grades: BMA or MXC

For carbide grade and cutting speed see page A04-2 and 3

Whitworth 55° BSW, BSF, BSP, BSB

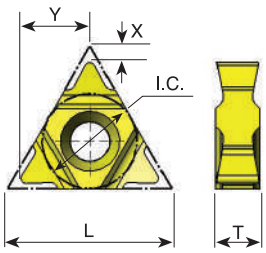

Pitch TPI	L	I.C. in	EXTERNAL Ordering Code	INTERNAL Ordering Code	X	Y	T
16	16U	3/8U	16U ER/L 16 W-6	16U IR/L 16 W-6	1.6	6.9	4.5
14	16U	3/8U	16U ER/L 14 W-6	16U IR/L 14 W-6	1.6	6.9	4.5
12	16U	3/8U	16U ER/L 12 W-6	16U IR/L 12 W-6	1.6	6.9	4.5
11	16U	3/8U	16U ER/L 11 W-6	16U IR/L 11 W-6	1.6	6.9	4.5
10	16U	3/8U	16U ER/L 10 W-6	16U IR/L 10 W-6	1.6	6.9	4.5
9	16U	3/8U	16U ER/L 9 W-6	16U IR/L 9 W-6	1.6	6.9	4.5
8	16U	3/8U	16U ER/L 8 W-6	16U IR/L 8 W-6	1.6	6.9	4.5
7	16U	3/8U	16U ER/L 7 W-6	16U IR/L 7 W-6	1.6	6.9	4.5
6	16U	3/8U	16U ER/L 6 W-6	16U IR/L 6 W-6	1.6	6.9	4.5
5	16U	3/8U	16U ER/L 5 W-6	16U IR/L 5 W-6	1.4	7.2	4.5

Available grades: BMA or MXC
Order example: 16U ER/L 9 W-6 BMA

NPT

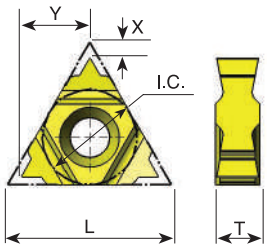

Pitch TPI	L	I.C. in	EXTERNAL Ordering Code	INTERNAL Ordering Code	X	Y	T
14	16U	3/8U	16U ER/L 14 NPT-6	16U IR/L 14 NPT-6	1.6	6.9	4.5
11.5	16U	3/8U	16U ER/L 11.5 NPT-6	16U IR/L 11.5 NPT-6	1.6	6.9	4.5
8	16U	3/8U	16U ER/L 8 NPT-6	16U IR/L 8 NPT-6	1.6	6.9	4.5

Available grades: BMA or MXC

For carbide grade and cutting speed see page A04-2 and 3

Heavy Duty Thread Turning Toolholders

External

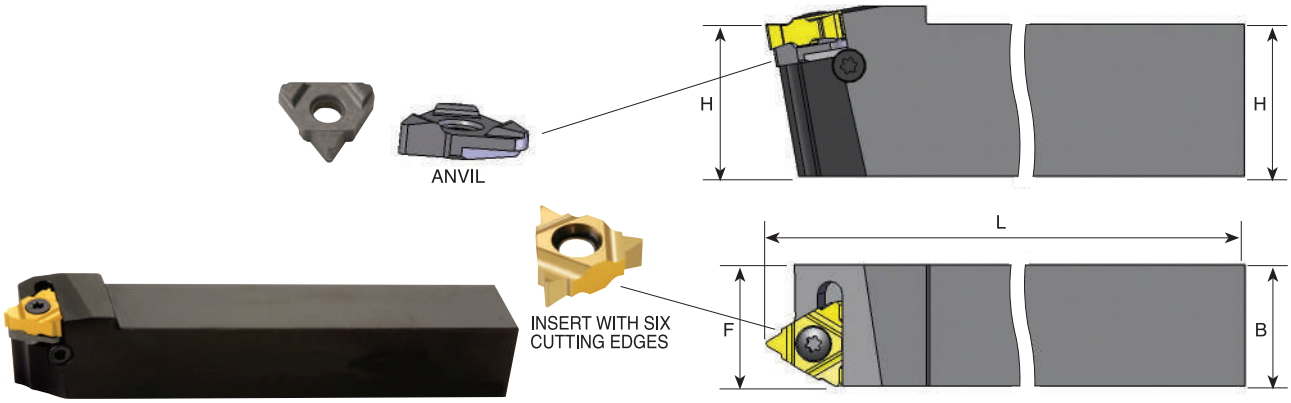

Ordering Code Right Hand	H	B	L	F	Insert Screw	Anvil Screw	Torx Key	RH Anvil	LH Anvil
SER 2020 K16U-6	20	20	125	20	S16	A16	K16	AER 16U-6	AEL 16U-6
SER 2520 M16U-6	25	20	150	20	S16	A16	K16	AER 16U-6	AEL 16U-6

For **LEFT HAND** toolholders specify SE**L** instead of SE**R**

Internal with coolant bore

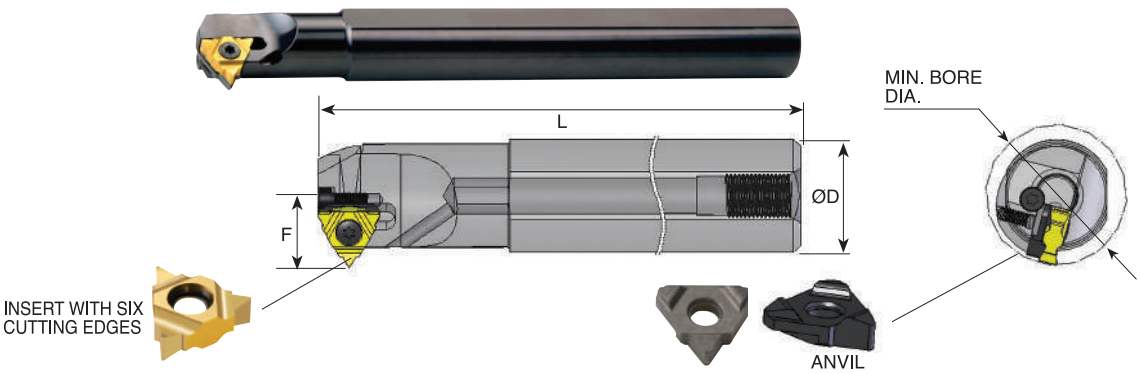

Ordering Code Right Hand	ØD	Min. bore dia.	L	F	Insert Screw	Anvil Screw	Torx Key	RH Anvil	LH Anvil
SIR 0020 P16UB-6	20	24	170	14.9	S16	A16	K16	AIR 16U-6	AIL 16U-6
SIR 0025 R16UB-6	25	29	200	17.4	S16	A16	K16	AIR 16U-6	AIL 16U-6

For **LEFT HAND** toolholders specify SI**L** instead of SI**R**

Thread Turning Technical Section

A04



Contents:	Page:	Contents:	Page:
Carbide Grade Selection	2	Thread Turning Methods	5
Type B inserts	2	Important Points about CPT Threading Inserts	6
Recommended cutting speed	3	Flank Clearance Angle	6
Conversion of Cutting Speed to Rotational Speed	4	Anvil Change Recommendation	7
Number of passes and depth of cut per pass for multitooth insert	4	Thread Turning - Step by Step	8-9
		Troubleshooting	9
Number of threading passes selection for single point inserts	5	Threading Inserts Standards	10

Carbide Grade Selection

Choose the CPT grade specifically formulated for your application from the following list:

Coated Grades

HBA (H10-H25) (S10-S25)	Extra-fine sub-micron grade with high toughness, for optimized performance on hardened steels and cast iron up to 62HRc, titanium alloys and super alloys (hastelloy, inconel and nickel based alloys).
BLU (M10-M20) (K05-K20) (N10-N20) (S10-S20)	PVD triple layer coated sub-micron grade for stainless steels, cast iron, titanium, non ferrous metals and most of the high temperature alloys.
BMA (P20-P40) (K20-K30)	PVD TiAlN coated sub-micrograin grade for stainless steels and exotic materials at medium to high cutting speeds.
P25C (P15-P35)	PVD TiN coated grade for treated and hard alloy steels (25 HRc & up) at medium to low cutting speeds.
MXC (K10-K20) (P10-P25)	PVD TiN coated micrograin for free cutting untreated alloy steels (below 30 HRc), for stainless steels and cast iron.
BXC (P30-P50) (K25-K40)	PVD TiN coated grade for low cutting speed. Works well with wide range of stainless steels.

Uncoated Grades

P30* (P20-P30)	Carbide grade for carbon and cast steels, works well at medium to low cutting speeds.
K20* (K10-K30)	Carbide grade for non ferrous metals, aluminum and cast iron.

* Upon request

Note: Due to our unique and specialized production techniques, CPT coated inserts provide superior cutting performance and exceptionally long tool life.

Grade availability per inserts size

Grade	HBA	BLU	BMA	P25C	MXC	BXC	P30	K20
Insert sizes	11, 16, 22, 27	11, 16, 22	06, 08, 11, 16, 22, 27, 33U,	11, 16, 22, 27, 33U	11, 16, 22, 27, 33U	06, 08	11, 16, 22, 27, 33U	06, 08 11, 16, 22, 27, 33U
		Type-B 11, 16	Type-B 11, 16					

Type B - Threading Inserts

A combination of ground profile, and sintered chip-breaker threading inserts.
Unlike most other manufacturers inserts, this combination ensures a consistent high quality thread, with precise shape and dimensions.
Two different unique styles of chip-breaker were designed to suit the different specific requirements of Internal threads and External threads.
All of CPT Type B inserts are made of BMA Sub-Micrograin grade.

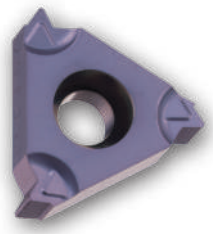

Recommended cutting speed (m/min) for thread turning inserts

ISO Standard	Material		Condition	HBA	BLU	BMA	P25C	MXC	BXC	K20	P30
P	Non-Alloy Steel and Cast Steel, Free Cutting Steel	<0.25%C	Annealed		110–210	120–180	100–180	100–180	70–150		50–130
		≥0.25%C	Annealed								
		<0.55%C	Quenched & Tempered								
		≥0.55%C	Annealed								
			Quenched & Tempered								
	Low Alloy Steel and Cast Steel (less than 5% alloying elements)		Annealed		90–140	80–130	70–120	70–120	60–90		50–80
			Quenched & Tempered								
	High Alloy Steel, Cast Steel, and Tool Steel		Annealed		70–90	60–80	50–60	55–70	50–60		40–50
			Quenched & Tempered								
M	Stainless Steel and Cast Steel		Ferritic / Martensitic		110–160	90–130	60–90	60–90	50–80	50–80	
			Martensitic								
			Austenitic								
K	Cast Iron Nodular (GGG)		Ferritic / Pearlitic		120–150	100–130		80–110	60–90		
			Pearlitic								
	Grey Cast Iron (GG)		Ferritic		140–150	120–130		90–100	65–85		
			Pearlitic								
	Malleable Cast Iron		Ferritic		110–140	100–130		80–100	60–85		
			Pearlitic								
N	Aluminum-Wrought Alloy		Not Cureable		250–500			200–400	150–400	200–400	100–400
			Cured								
	Aluminum-Cast, Alloyed	<=12% Si	Not Cureable		280–500			200–500	150–350	200–500	110–300
			Cured								
		>12% Si	High Temperature								
	Copper Alloys	>1% Pb	Free Cutting		190–350			150–250	110–180	150–250	90–150
			Brass								
			Electrolytic Copper								
	Non Metallic		Duroplastics, Fiber Plastics					200–300	150–210	100–200	110–150
			Hard Rubber								
S	High Temp. Alloys, Super Alloys	Fe based	Annealed	20–80	30–65	25–60					
			Cured								
		Ni or Co based	Annealed								
			Cured								
			Cast								
	Titanium Alloys		Alpha +Beta Alloys Cured	30–60	40–50	35–45				35–45	
H	Hardened Steel		Hardened 45-50 HRc	30–60	40–50	35–45					
			Hardened 51-55 HRc								
			Hardened 56-62 HRc								
	Chilled Cast Iron		Cast	20–50	30–40	25–35					
	Cast Iron		Hardened	20–40	20–30	15–25					

Conversion of Cutting Speed to Rotational Speed

Conversion of a selected cutting speed to rotational speed is calculated by the following formula:

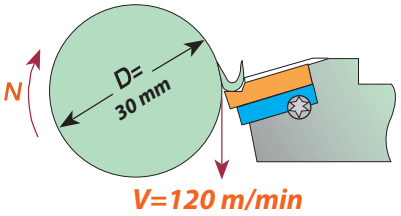

Example

$$N = \frac{V \times 1000}{\pi \times D} = \frac{120 \times 1000}{3.14 \times 30} = 1274 \text{ RPM}$$

Number of passes and depth of cut per pass for multitooth insert

	Pitch mm	Insert Size		No. of Teeth	Ordering Code	No. of Passes	Depth of Cut per pass			
		L	I.C. (in)				1	2	3	4
ISO External	1.00	16	3/8	3	16 ER 1.0 ISO 3M	2	0.38	0.25		
	1.50	16	3/8	2	16 ER 1.5 ISO 2M	3	0.42	0.30	0.20	
	1.50	22	1/2	3	22 ER 1.5 ISO 3M	2	0.55	0.37		
	2.00	22	1/2	2	22 ER 2.0 ISO 2M	3	0.57	0.40	0.28	
	2.00	22	1/2	3	22 ER 2.0 ISO 3M	2	0.76	0.49		
	3.00	27	5/8	2	27 ER 3.0 ISO 2M	4	0.59	0.51	0.42	0.32
ISO Internal	1.00	16	3/8	3	16 IR 1.0 ISO 3M	2	0.33	0.25		
	1.50	16	3/8	2	16 IR 1.5 ISO 2M	3	0.38	0.29	0.20	
	1.50	22	1/2	3	22 IR 1.5 ISO 3M	2	0.50	0.37		
	2.00	22	1/2	2	22 IR 2.0 ISO 2M	3	0.52	0.37	0.26	
	2.00	22	1/2	3	22 IR 2.0 ISO 3M	2	0.70	0.45		
	3.00	27	5/8	2	27 IR 3.0 ISO 2M	4	0.58	0.46	0.39	0.30
UN External	16	16	3/8	2	16 ER 16 UN 2M	3	0.44	0.31	0.22	
	16	22	1/2	3	22 ER 16 UN 3M	2	0.58	0.39		
	12	22	1/2	2	22 ER 12 UN 2M	3	0.59	0.42	0.30	
	12	22	1/2	3	22 ER 12 UN 3M	2	0.78	0.52		
	8	27	5/8	2	27 ER 8 UN 2M	4	0.62	0.54	0.45	0.35
UN Internal	16	16	3/8	2	16 IR 16 UN 2M	3	0.42	0.28	0.22	
	16	22	1/2	3	22 IR 16 UN 3M	2	0.55	0.37		
	12	22	1/2	2	22 IR 12 UN 2M	3	0.53	0.38	0.31	
	12	22	1/2	3	22 IR 12 UN 3M	2	0.74	0.48		
	8	27	5/8	2	27 IR 8 UN 2M	4	0.63	0.50	0.40	0.30
Whitworth 55° External	14	16	3/8	2	16 ER 14 W 2M	3	0.52	0.37	0.27	
	14	22	1/2	3	22 ER 14 W 3M	2	0.70	0.46		
	11	22	1/2	2	22 ER 11 W 2M	3	0.67	0.47	0.34	
Whitworth 55° Internal	14	16	3/8	2	16 IR 14 W 2M	3	0.52	0.37	0.27	
	14	22	1/2	3	22 IR 14 W 3M	2	0.70	0.46		
	11	22	1/2	2	22 IR 11 W 2M	2	0.67	0.47	0.34	
NPT External	14	16	3/8	2	16 ER 14 NPT 2M	3				
	11.5	22	1/2	2	22 ER 11.5 NPT 2M	4	0.54	0.47	0.37	0.30
	11.5	27	5/8	3	27 ER 11.5 NPT 3M	4	0.76	0.54	0.38	
	8	27	5/8	2	27 ER 8 NPT 2M	4	0.81	0.60	0.55	0.45
NPT Internal	14	16	3/8	2	16 IR 14 NPT 2M	3				
	11.5	22	1/2	2	22 IR 11.5 NPT 2M	4	0.54	0.47	0.37	0.30
	11.5	27	5/8	3	27 IR 11.5 NPT 3M	4	0.76	0.54	0.38	
	8	27	5/8	2	27 IR 8 NPT 2M	4	0.81	0.60	0.55	0.45
API Round External	10	22	1/2	2	22 ER 10 APIRD 2M	3	0.60	0.50	0.31	
	10	27	5/8	3	27 ER 10 APIRD 3M	2	1.00	0.41		
	8	27	5/8	2	27 ER 8 APIRD 2M	3	0.80	0.60	0.41	
API Round Internal	10	22	1/2	2	22 IR 10 APIRD 2M	3	0.60	0.50	0.31	
	10	27	5/8	3	27 IR 10 APIRD 3M	2	1.00	0.41		
	8	27	5/8	2	27 IR 8 APIRD 2M	3	0.80	0.60	0.41	

Number of threading passes selection for single point inserts

Pitch:	mm TPI	0.5 48	0.8 32	1.0 24	1.25 20	1.5 16	1.75 14	2.0 12	2.5 10	3.0 8	4.0 6	6.0 4
Number of Passes		3-6	4-7	4-9	6-10	5-11	9-12	6-13	7-15	8-17	10-20	11-22

NOTES:

1. For most standard applications the middle of the range is a good starting point.
2. For most materials, the tougher the material, the higher the number of cutting passes you should select.
3. As a general rule of thumb, fewer passes are better than more speed.

Thread Turning Methods

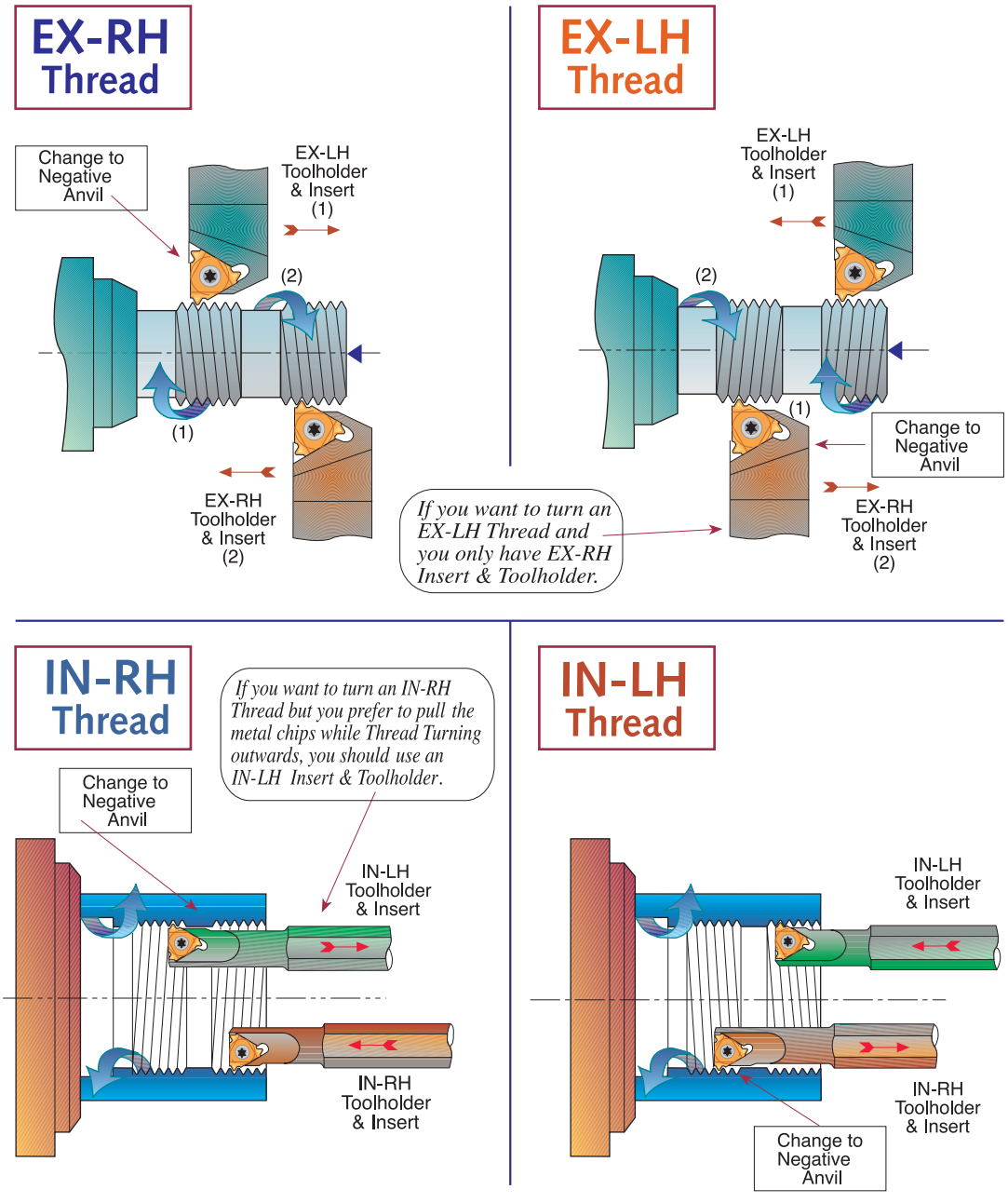

Important Points about CPT Threading Inserts

1. In most thread forms internal and external threads have different depth and radii, thus tools are not interchangeable

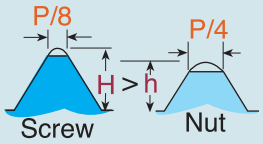

2. The Insert relief angle of a standard CPT external toolholder is 10°; for an internal toolholder it is 15°. This 5° difference is to provide additional necessary radial clearance.

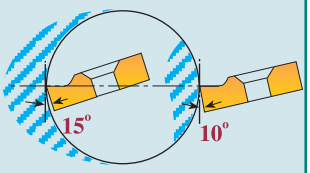

3. Our built-in relief angles ensure automatic insert flank angle clearance.

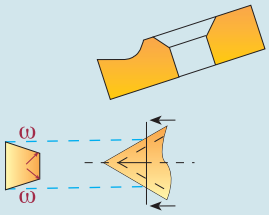

4. Profiles of CPT internal & external threading inserts are precision ground to ensure accurate thread geometry when used in their corresponding toolholders.
Using internal inserts with an external holder will result in distortion of angle and insert geometry.

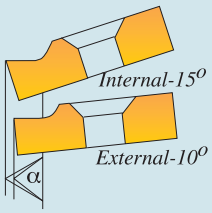

5. Insert and toolholder should always match.
An IN-RH insert must be used with an IN-RH toolholder.
No mismatch is allowed.



Flank Clearance Angle ω

$$\omega = ArcTan\,(Tan\,\alpha \times Tan\,\phi)$$

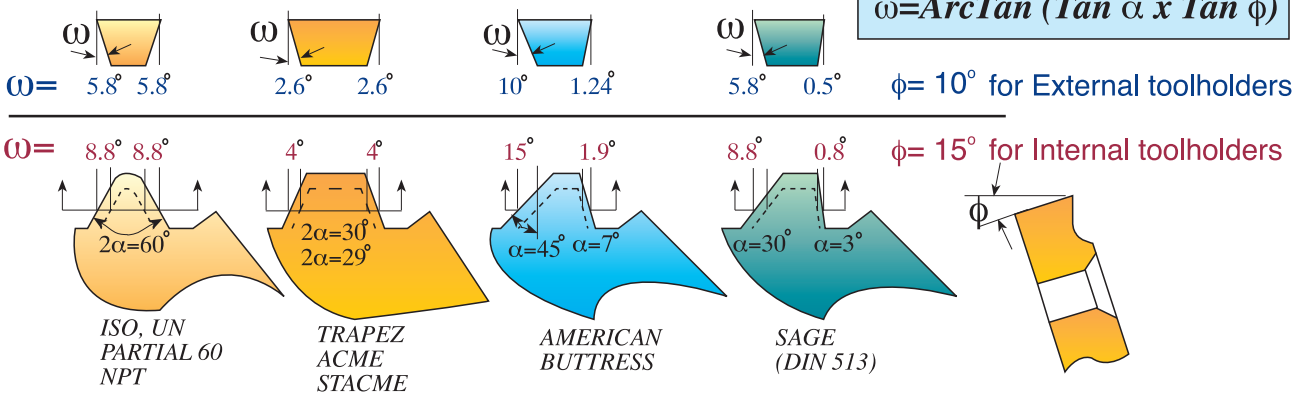

Anvil Change Recommendation

As can be seen from the chart, some Pitch to Diameter combinations require an anvil change. If change is required, use AE anvils for EX-RH and IN-LH toolholders and AI anvils for IN-RH and EX-LH toolholders.

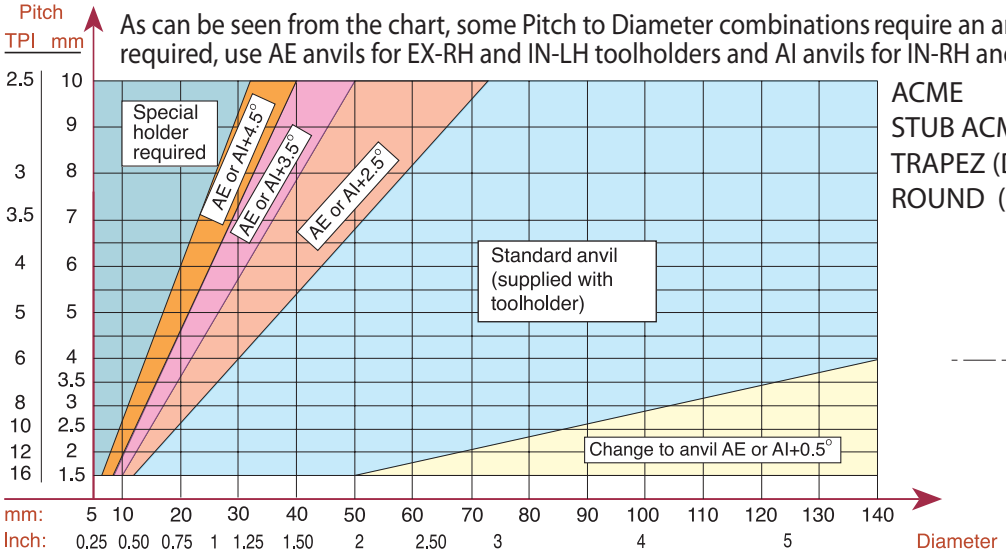

ACME
STUB ACME
TRAPEZ (DIN 103)
ROUND (DIN 405)

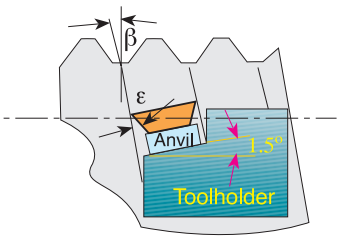

As can be seen from the chart, most applications do not require an anvil change. If change is required, use AE anvils for EX-RH and IN-LH toolholders and AI anvils for IN-RH and EX-LH toolholders.

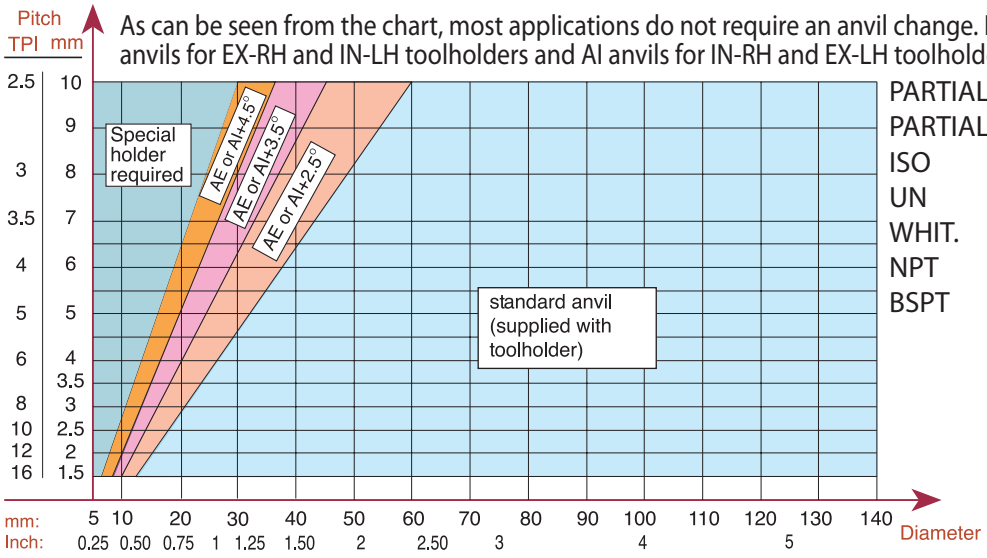

PARTIAL PROFILE 60°
PARTIAL PROFILE 55°
ISO
UN
WHIT.
NPT
BSPT

As can be seen from the chart, most applications require an anvil change. In most cases a negative anvil is required. Use AE anvils for EX-RH and IN-LH toolholders and AI anvils for IN-RH and EX-LH toolholders.

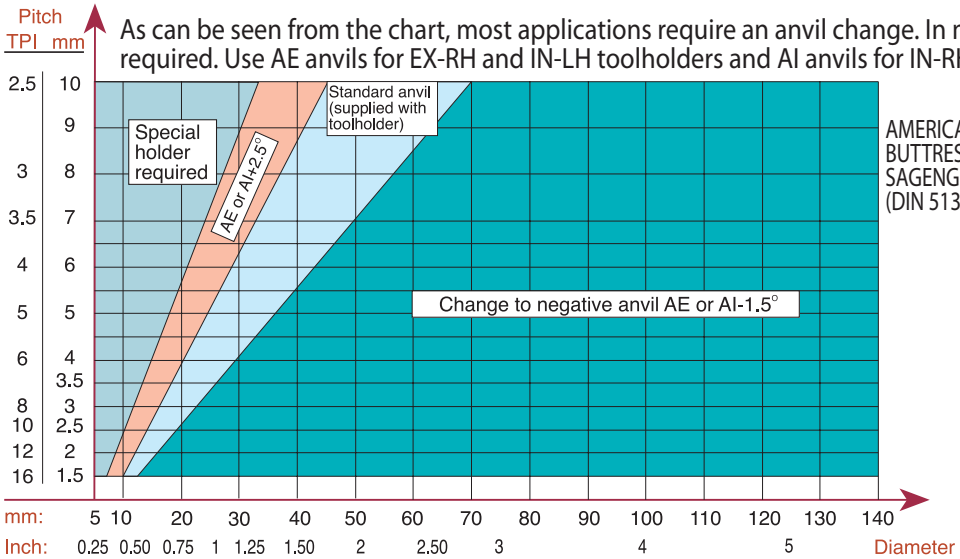

AMERICAN BUTTRESS
SAGENGEWINDE (DIN 513)

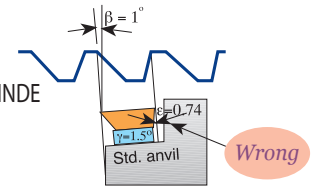

Before Anvil change

Replacing the standard anvil with an anvil with negative angle, will eliminate side rubbing

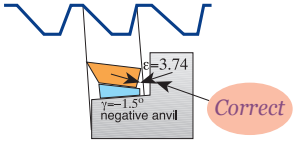

After Anvil Change

Thread Turning - Step by Step

Step 1 : Choose Thread Turning Method from page A04-5
Step 2 : Choose Insert
Step 3 : Choose Toolholder
Step 4 : Choose Insert Grade
Step 5 : Choose Thread Turning Speed
Step 6 : Choose Number of Threading Passes

In most cases the above mentioned 6 steps would be the steps needed to ensure a good thread. When cutting more complicated threads such as TRAPEZ, ACME, BUTTRESS or SAGE, it is advisable to check the effect of the thread "HELIX ANGLE" β on the "RESULTANT FLANK CLEARANCE" ε. If ε is smaller than 2°, an anvil change is required.

Step 7 : Find Thread Helix Angle
Step 8 : Choose Correct Anvil

EXAMPLES:

Example No. 1:

Step 1: Choose Thread Turning Method from page A04-5, we chose **EX - RH Insert & Toolholder**

Step 2: Choose Insert from page A01-7: **16 ER 1.5 ISO**

Step 3: Choose Toolholder from page A02-3: **SER 2020 K16**

Step 4: Choose Insert Grade from selection on page A04-2
Our choice for Alloy Steel is Grade **P25C**

Step 5: Choose Thread Turning Speed from chart on page A04-3, we chose **100 m/min**

Rotational Speed calculation: $N = \frac{100 \times 1000}{\pi \times 30} = 1065$ rpm

Step 6: Choose Number of Threading passes from table on page A04-5, we chose **8 passes**

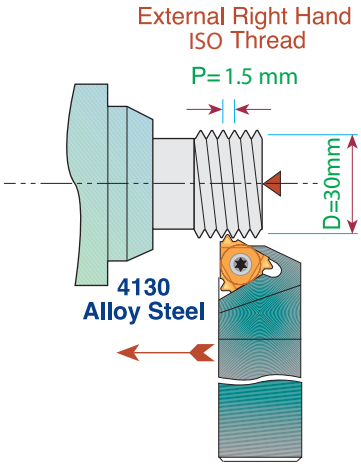

Example No. 2:

Step 1: Choose Thread Turning Method from page A04-5
Usually, an IN-RH Toolholder and Insert will be chosen, however, in this particular case we prefer to pull the metal chips while thread turning outward, thus we chose to work with **IN-LH Insert & Toolholder**

Step 2: Choose Insert from page A01-11: **16 IL 12 UN**

Step 3: Choose Toolholder from page A02-8: **SIL 0025 R16**
Note: since we thread cut IN-RH thread outward with an IN-LH tool, do not forget to replace the standard anvil (supplied with the holder) with a negative anvil **AE16-1.5**

Step 4: Choose Insert Grade from selection on page A04-2
Our choice for Brass is Grade **K20**

Step 5: Choose Thread Turning Speed from chart on page A04-3, we chose **150 m/min**

Rotational Speed calculation: $N = \frac{150 \times 1000}{\pi \times 38.1} = 1254$ RPM

Step 6: Choose Number of Threading passes from table on page A04-5, we chose **9 passes**

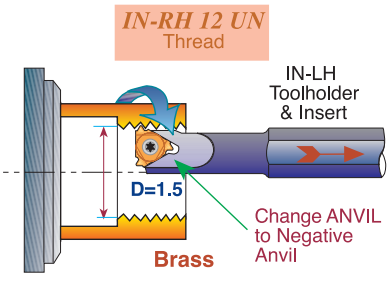

Example No. 3:

Step 1: Choose Thread Turning Method from page A04-5
We chose EX-RH Insert & Toolholder.

Step 2: Choose Insert from page A01-31: **16 ER 12 ABUT**

Step 3: Choose Toolholder from page A02-3: **SER 2525 M16**

Step 4: Choose Insert Grade from selection on page A04-2
Our choice for Stainless Steel is Grade **BMA**

Step 5: Choose Thread Turning Speed from chart on page A04-3
We chose 120 m/min.
Rotational Speed calculation: $N = \frac{120 \times 1000}{\pi \times 40} = 954$ RPM

Step 6: Choose Number of Threading passes
from table on page A04-5. We chose **13 passes**

Step 7: Find Thread Helix Angle: on page A02-19 for Pitch of 12 TPI and 40 Diameter Helix Angle as shown in the chart is 1°

Step 8: Choose correct Anvil: As can be seen from the chart on page A04-7, for AMERICAN BUTTRESS Thread, for 12 TPI and 40 Diameter a negative anvil **AE16-1.5** should replace the standard anvil supplied with the toolholder

EX-RH. AMERICAN BUTTRESS
12 TPI on 40 mm diameter.

Stainless Steel 304

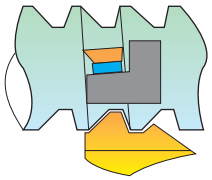

Replacing the standard anvil with an anvil with negative angle will eliminate side rubbing

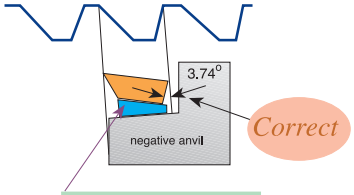

Anvil chosen: AE16-1.5

Troubleshooting

Chipping

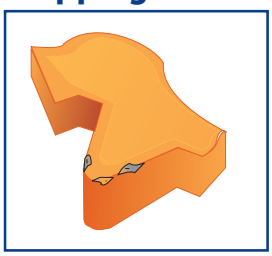

1. Use a tougher carbide grade
2. Eliminate tool overhang
3. Check if insert is correctly clamped
4. Eliminate vibration

Crater Wear



1. Reduce cutting speed
2. Apply coolant fluid
3. Use a harder carbide grade

Build-up Edge



1. Increase cutting speed
2. Use a tougher carbide grade

Thermal Cracking

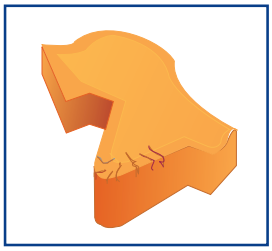

1. Reduce cutting speed
2. Apply coolant fluid
3. Use a tougher carbide grade

Deformation

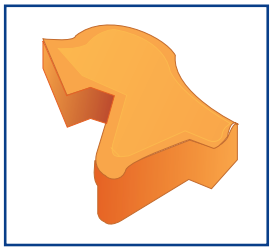

1. Use a harder carbide grade
2. Reduce cutting speed
3. Reduce depth of cut
4. Apply coolant fluid

Fracture



1. Use a tougher carbide grade
2. Reduce depth of cut
3. Index insert sooner
4. Check machine and tool stability

Threading Inserts Standards

Thread Profile	Standard	Thread Class
ISO	DIN 13	6g / 6H
UN	ANSI B1.1-1989	2A / 2B
WHITWORTH	B.S. 84: 1956	Medium Class
NPT	ANSI B1.20.1-1983	-
NPTF	ANSI B1.20.3-1976	-
NPS	ANSI B1.20.1-1983	-
NPSM	ANSI B1.20.1-1983	-
BSPT	B.S. 21: 1957	-
DIN 477	DIN 477	-
ACME	ANSI B1.5-1988	3G (EXT), 3G / 2G (INT)
STUB ACME	ANSI B1.5-1988	2G
TRAPEZ	DIN 103	7e / 7H
ROUND	DIN 405	Class 7
UNJ	MIL-S-8879C	3A / 3B
MJ	ISO 5855	4h/6h, 4H/5H
AMERICAN BUTTRESS	ANSI B1.9-1973	Class 2
SAGENGEWINDE	DIN 513	-
PG	DIN 40430	-
V-0.040	API Spec7	-
V-0.038R	API Spec7	-
V-0.050	API Spec7	-
V-0.055	API Spec7	-
API ROUND	API Spec Standard 5B	-
EXTREME – LINE CASING	API Spec Standard 5B	-
BUTTRESS CASING	API Spec Standard 5B	-
VAM	VAM	-
HUGHES	HUGHES	-
PAC	PAC	-

DIN: **Deutsches Institut für Normung**
ANSI: **American National Standards Institute**
API: **American Petroleum Institute**
B.S.: **British Standards**
ISO: **International Organisation for Standardization**
MIL-S: **Military Specification**
NPT: **American National Standard Taper Pipe Thread**
NPTF: **National Standard Taper Fuel:Dryseal USA**
PAC: **Pacific Asia Connection**
NPS: **Straight thread,same as NPT without taper**
NPSM: **Free-Fitting Mechanical Joints**

Grooving Tools

A05



A combination of ground profile and sintered chip - breaker

Advantages:

- Same Toolholder for Grooving and Threading
- Minimum Investment in Tooling
- Three Cutting Edges
- Precision Ground

Contents:	Page:	Contents:	Page:
Grooving Inserts	2	Grooving Kits	3
Grooving Inserts for Snap Ring	2	Technical Section	4
Product identification	3		

Grooving Inserts

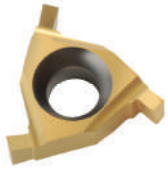

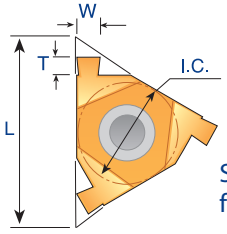

External & Internal

ER / IL
Same insert can be used for EX.RH and for IN.LH.

IR / EL
Same insert can be used for IN.RH and for EX.LH.

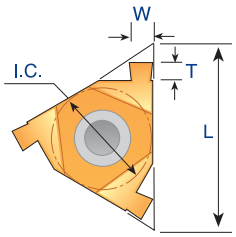

W ±0.02	T	I.C. in	L mm	Ordering Code ER/IL Inserts	Ordering Code Anvil	Ordering Code IR/EL Inserts	Ordering Code Anvil
0.50	1.4	1/4	11	**11 ER/IL 0.50**	-	**11 IR/EL 0.50**	-
0.60	1.4	1/4	11	**11 ER/IL 0.60**	-	**11 IR/EL 0.60**	-
0.70	1.4	1/4	11	**11 ER/IL 0.70**	-	**11 IR/EL 0.70**	-
0.80	1.4	1/4	11	**11 ER/IL 0.80**	-	**11 IR/EL 0.80**	-
1.00	1.4	1/4	11	**11 ER/IL 1.00**	-	**11 IR/EL 1.00**	-
1.20	1.4	1/4	11	**11 ER/IL 1.20**	-	**11 IR/EL 1.20**	-
0.50	1.4	3/8	16	**16 ER/IL 0.50**	AE 16-0	**16 IR/EL 0.50**	AI 16-0
1.00	1.4	3/8	16	**16 ER/IL 1.00**	AE 16-0	**16 IR/EL 1.00**	AI 16-0
1.20	1.6	3/8	16	**16 ER/IL 1.20**	AE 16-0	**16 IR/EL 1.20**	AI 16-0
1.40	1.8	3/8	16	**16 ER/IL 1.40**	AE 16-0	**16 IR/EL 1.40**	AI 16-0
1.70	2.0	3/8	16	**16 ER/IL 1.70**	AE 16-0	**16 IR/EL 1.70**	AI 16-0
1.95	2.0	3/8	16	**16 ER/IL 1.95**	AE 16-0	**16 IR/EL 1.95**	AI 16-0
2.25	2.25	3/8	16	**16 ER/IL 2.25**	AE 16-0	**16 IR/EL 2.25**	AI 16-0

Order example: 16 ER/IL 1.20 BXC
* The inserts should be used with our standard threading toolholders
* The anvil must be changed to AE 16-0 or AI 16-0 before using size 16 mm (3/8") inserts
* Size 16 internal holders without anvil can't be used

Grooving Inserts for Snap Ring

Carbide Grade: BXC



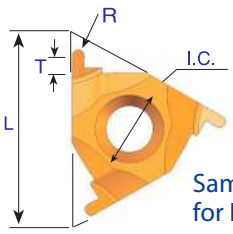

External & Internal Partial Profile Inserts

ER / IL
Same insert can be used for EX.RH and for IN.LH.

IR / EL
Same insert can be used for IN.RH and for EX.LH.

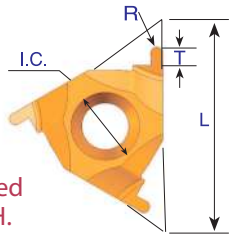

R ±0.04	T	I.C. in	L mm	Ordering Code ER/IL Inserts	Ordering Code Anvil	Ordering Code IR/EL Inserts	Ordering Code Anvil
0.5	1.4	3/8	16	**16 ER/IL R0.50**	AE 16 - 0	**16 IR/EL R0.50**	AI 16 - 0
0.6	1.6	3/8	16	**16 ER/IL R0.60**	AE 16 - 0	**16 IR/EL R0.60**	AI 16 - 0
0.9	2.0	3/8	16	**16 ER/IL R0.90**	AE 16 - 0	**16 IR/EL R0.90**	AI 16 - 0
1.0	2.0	3/8	16	**16 ER/IL R1.00**	AE 16 - 0	**16 IR/EL R1.00**	AI 16 - 0
1.1	2.15	3/8	16	**16 ER/IL R1.10**	AE 16 - 0	**16 IR/EL R1.10**	AI 16 - 0
1.2	2.25	3/8	16	**16 ER/IL R1.20**	AE 16 - 0	**16 IR/EL R1.20**	AI 16 - 0

Order example: 16ER/IL R1.20 BXC
* The inserts should be used with our standard threading toolholders
* The anvil must be changed to AE 16-0 or AI 16-0 before using size 16 mm (3/8") inserts
* Size 16 internal holders without anvil can't be used

Product Identification

Grooving Inserts Ordering Codes

16 — 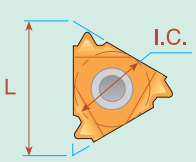

L	I.C.
11	1/4″
16	3/8″

ER — E = External, I = Internal

IL — R = Right Hand, L = Left Hand

[ ] — R = Radius

1.0 — **Width** mm 0.50-2.25

BMA — **Carbide Grade:** BXC, BMA

Grooving Kits



ER / IL INSERT
KGRO - EXTERNAL

16	ER / IL 1.0	BXC	1 unit
16	ER / IL 1.2	BXC	1 unit
16	ER / IL 1.4	BXC	1 unit
16	ER / IL 1.7	BXC	1 unit
16	ER / IL 1.95	BXC	1 unit
16	ER / IL 2.25	BXC	1 unit
ANVIL	AE 16 - 0		1 unit

IR / EL INSERT
KGRO - INTERNAL

16	IR / EL 1.0	BXC	1 unit
16	IR / EL 1.2	BXC	1 unit
16	IR / EL 1.4	BXC	1 unit
16	IR / EL 1.7	BXC	1 unit
16	IR / EL 1.95	BXC	1 unit
16	IR / EL 2.25	BXC	1 unit
ANVIL	AI 16 - 0		1 unit

Technical Section

Cutting Speeds for Grooving Tools

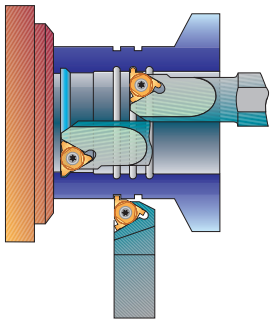

Carbide Grades:

BXC (P30 - P50, K25 - K40)
PVD TiN coated grade for low cutting speed. Works well with a wide range of stainless steels.

BMA (P20 - P40, K20 - K30)
PVD TiAlN coated sub-micrograin grade for stainless steels and exotic materials at medium to high cutting speeds.

ISO Standard	Materials	Cutting Speed m/min
P	Low & Medium Carbon Steel	20-100
	High Carbon Steel	30- 80
	Alloy Steels and Treated Steels	40- 90
M	Stainless Steels	30- 80
	Cast Steels	30- 90
K	Cast Iron	30- 90
N	Non-Ferrous and Aluminum	20-200

For grooving small bores see pages A06-22 to 30

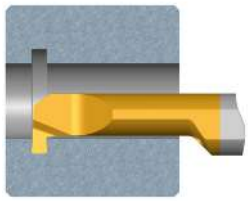
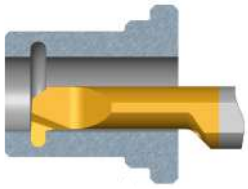
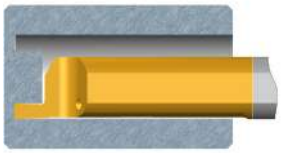
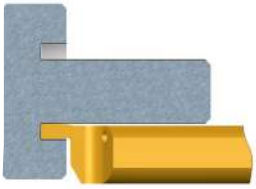
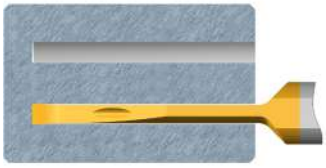
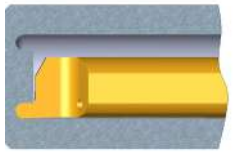

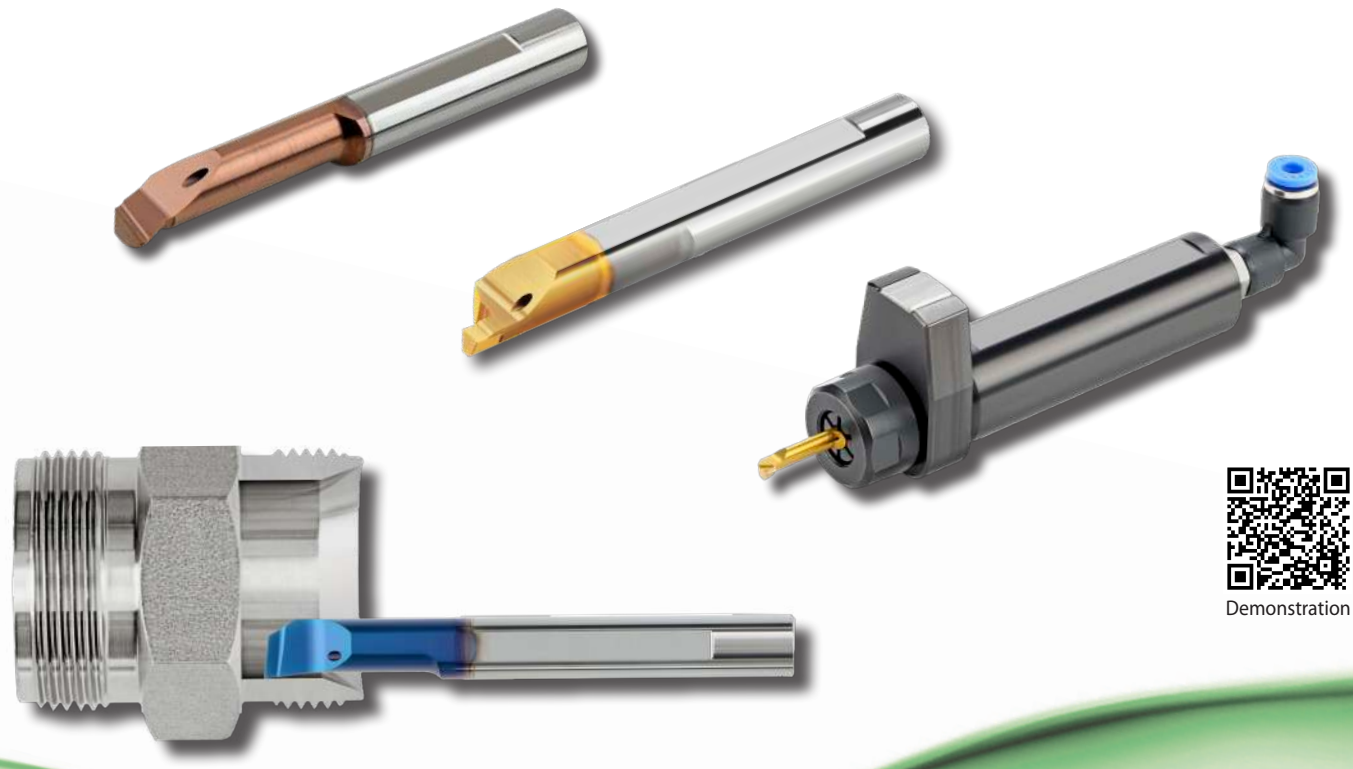

Demonstration

Solid Carbide tools for working in small bores

These tools are made for the high-tech, medical and small component industry. All tools include through coolant enabling the cooling fluid to reach the cutting edge efficiently, for easy chip removal and smooth cutting operations.

Contents:	Page:
Tiny Bars	2-31
Product Identification	2
MTR Boring Bars	3-4
CBR Profiling and Boring Bars	5
CMR Multi-Task Tiny Bars	6
MXR Back Turning Bars	7
MPR Profiling and Boring Bars	8-9
MUR Profiling, 90° Face Cutting Bars	10
MQR Profiling and Boring Bars	11
MIR Threading Bars	12-18
MDR Thread Relief, Chamfering and Grooving Bars	19
MCR Chamfering and Boring Bars	20
MWR Chamfering and Profiling Bars	21
MGR Grooving Bars	22-23
MKR Full Radius Grooving Bars	24

Contents:	Page:
MFR Face Grooving Bars	25
MFR Face Grooving Bars with Chip Former	26
MFL Face Grooving Bars	27
MVR Deep Face Grooving Bars	28
MZR Face Grooving Bars	29
MZL Face Grooving Bars	30
HK Broaching Tools	31
Tiny Toolholders	32-41
Product Identification	32
Tiny Toolholders	32-33
Tiny Toolholders for Star Swiss machines	34
CIM Clamping System	35-38
Tiny Toolholders Square Shank	39-41
Tiny Tools Kits	42
Technical Section	43-46

Product Identification

Tiny Bars Ordering Codes

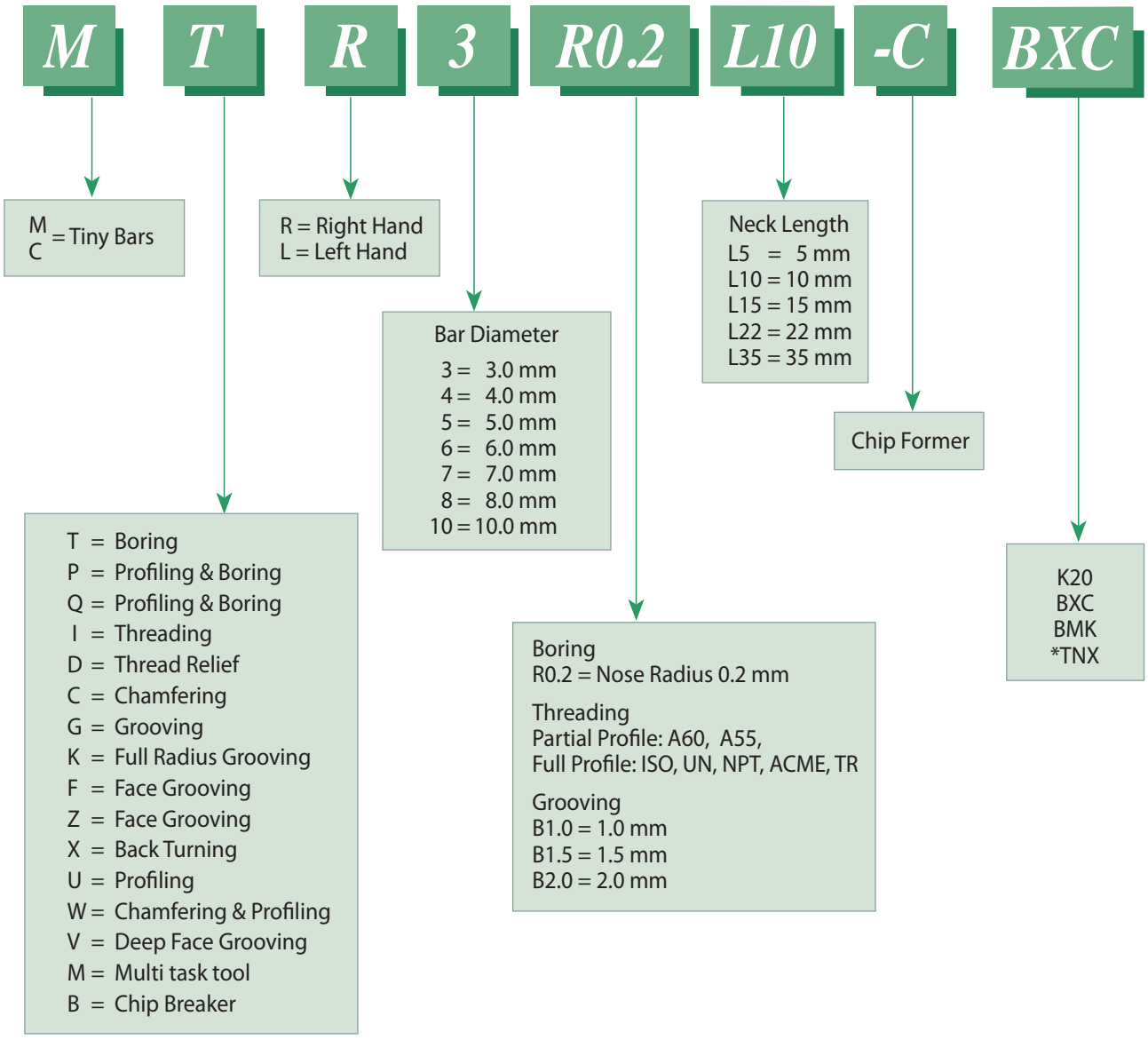

* Available only for CBR bars

MTR Bars Boring

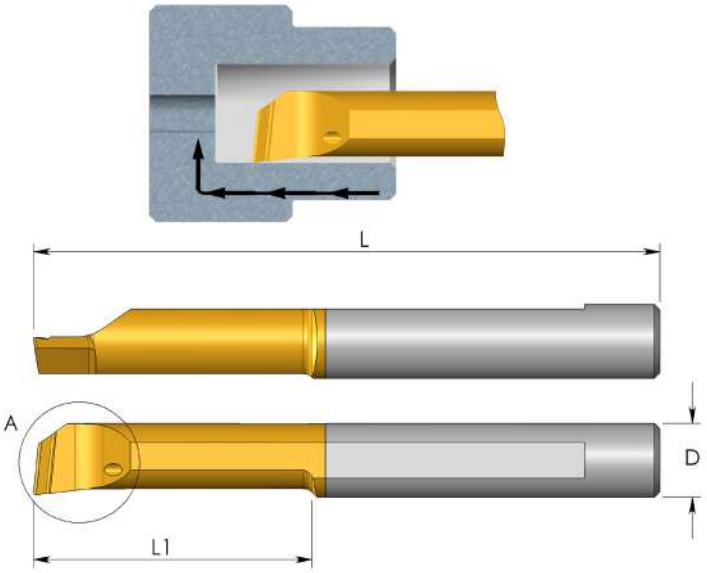

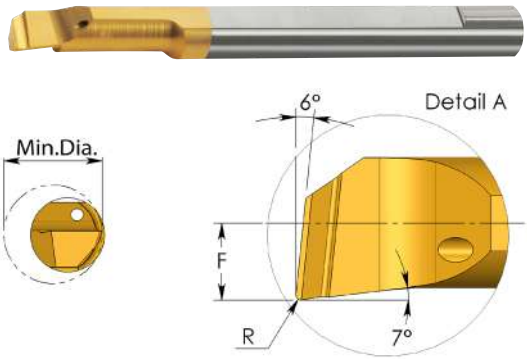

Grade	P	M	K	N	S	H
K20		○	○	●	○	
BXC	●	●	●	○	●	●
BMK	●	●	●	○	●	●

D	Ordering Code	L	L1	R	F	Min. Dia.	Holder
3.0	MTR 1 R0 L6	39	6	0	0.5	1.0	SIM ... H3
	MTR 1 R0.05 L4	39	4	0.05	0.5	1.0	
	MTR 1 R0.05 L6	39	6	0.05	0.5	1.0	
3.0	MTR 1.2 R0 L7	39	7	0	0.6	1.2	SIM ... H3
	MTR 1.2 R0 L9	39	9	0	0.6	1.2	
3.0	MTR 1.5 R0 L6	39	6	0	0.7	1.5	SIM ... H3
	MTR 1.5 R0.1 L6	39	6	0.10	0.7	1.5	
3.0	MTR 2 R0 L10	39	10	0	0.8	2.1	SIM ... H3
	MTR 2 R0.05 L5	39	5	0.05	0.8	2.1	
	MTR 2 R0.05 L10	39	10	0.05	0.8	2.1	
	MTR 2 R0.1 L10	39	10	0.10	0.8	2.1	
	MTR 2 R0.1 L15	39	15	0.10	0.8	2.1	
	MTR 2 R0.15 L5	39	5	0.15	0.8	2.1	
	MTR 2 R0.15 L10	39	10	0.15	0.8	2.1	
4.0	MTR 2.5 R0 L10	51	10	0	1.0	2.5	SIM ... H4
	MTR 2.5 R0.1 L10	51	10	0.10	1.0	2.5	
	MTR 2.5 R0.1 L15	51	15	0.10	1.0	2.5	
3.0	MTR 3 R0.05 L10	39	10	0.05	1.3	3.1	SIM ... H3
	MTR 3 R0.05 L15	39	15	0.05	1.3	3.1	
	MTR 3 R0.1 L10	39	10	0.10	1.3	3.1	
	MTR 3 R0.1 L15	39	15	0.10	1.3	3.1	
	MTR 3 R0.2 L10	39	10	0.20	1.3	3.1	
	MTR 3 R0.2 L15	39	15	0.20	1.3	3.1	
4.0	MTR 4 R0.05 L15	51	15	0.05	1.7	4.1	SIM ... H4
	MTR 4 R0.05 L22	51	22	0.05	1.7	4.1	
	MTR 4 R0.1 L10	51	10	0.10	1.7	4.1	
	MTR 4 R0.1 L15	51	15	0.10	1.7	4.1	
	MTR 4 R0.1 L22	51	22	0.10	1.7	4.1	
	MTR 4 R0.2 L10	51	10	0.20	1.7	4.1	
	MTR 4 R0.2 L15	51	15	0.20	1.7	4.1	
	MTR 4 R0.2 L22	51	22	0.20	1.7	4.1	
	MTR 4 R0.2 L30	62	30	0.20	1.7	4.1	

For additional holders see page A06-32 to 41

● First choice ○ Alternative

MTR Bars Boring

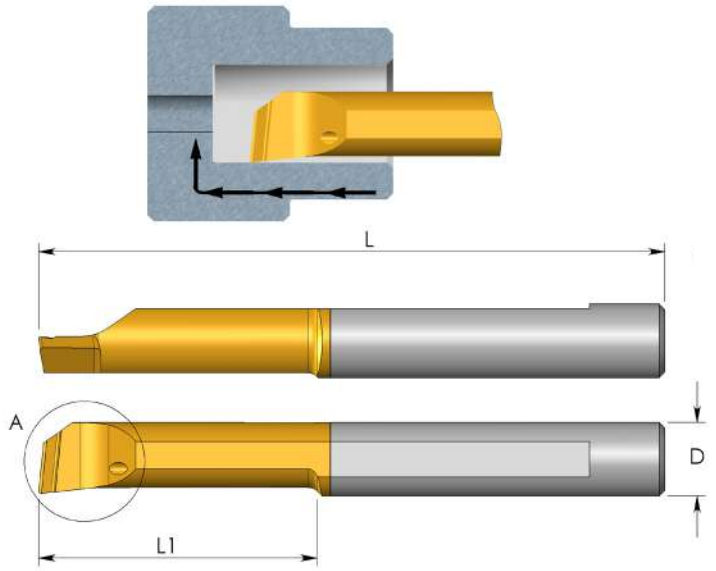





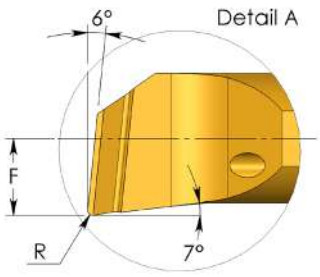

D	Ordering Code	L	L1	R	F	Min Dia.	Holder
5.0	MTR 5 R0.05 L15	51	15	0.05	2.1	5.1	SIM ... H5
	MTR 5 R0.1 L15	51	15	0.10	2.1	5.1	
	MTR 5 R0.1 L22	51	22	0.10	2.1	5.1	
	MTR 5 R0.1 L30	76	30	0.10	2.1	5.1	
	MTR 5 R0.2 L10	51	10	0.20	2.1	5.1	
	MTR 5 R0.2 L15	51	15	0.20	2.1	5.1	
	MTR 5 R0.2 L22	51	22	0.20	2.1	5.1	
	MTR 5 R0.2 L30	76	30	0.20	2.1	5.1	
	MTR 5 R0.2 L40	76	40	0.20	2.1	5.1	
6.0	MTR 6 R0.05 L15	51	15	0.05	2.8	6.1	SIM ... H6
	MTR 6 R0.05 L22	51	22	0.05	2.8	6.1	
	MTR 6 R0.1 L15	51	15	0.10	2.8	6.1	
	MTR 6 R0.1 L22	51	22	0.10	2.8	6.1	
	MTR 6 R0.2 L15	51	15	0.20	2.8	6.1	
	MTR 6 R0.2 L22	51	22	0.20	2.8	6.1	
	MTR 6 R0.2 L30	58	30	0.20	2.8	6.1	
	MTR 6 R0.2 L35	76	35	0.20	2.8	6.1	
	MTR 6 R0.2 L40	76	40	0.20	2.8	6.1	
7.0	MTR 7 R0.2 L22	62	22	0.20	3.3	7.1	SIM ... H7
	MTR 7 R0.2 L30	62	30	0.20	3.3	7.1	
8.0	MTR 8 R0.2 L15	64	15	0.20	3.8	8.1	SIM ... H8
	MTR 8 R0.2 L22	64	22	0.20	3.8	8.1	
	MTR 8 R0.2 L35	76	35	0.20	3.8	8.1	
10.0	MTR 10 R0.2 L35	73	35	0.20	4.8	10.1	SIM ... H10

Order example: MTR 4 R0.2 L15 BXC
For L.H. bars specify MTL instead of MTR
For additional holders see page A06-32 to 41

CBR Bars *Profiling and Boring*

With advanced Chip Breaker



Chip evacuation is obtained thanks to advanced Chip Breaker and the internal coolant through the tool, pushing the chips out of the hole.

Excellent solution for machining stainless steels, super alloys and other "difficult" materials that create curly chips around the tool and the application. Can be used also as general purpose for a wide range of materials.

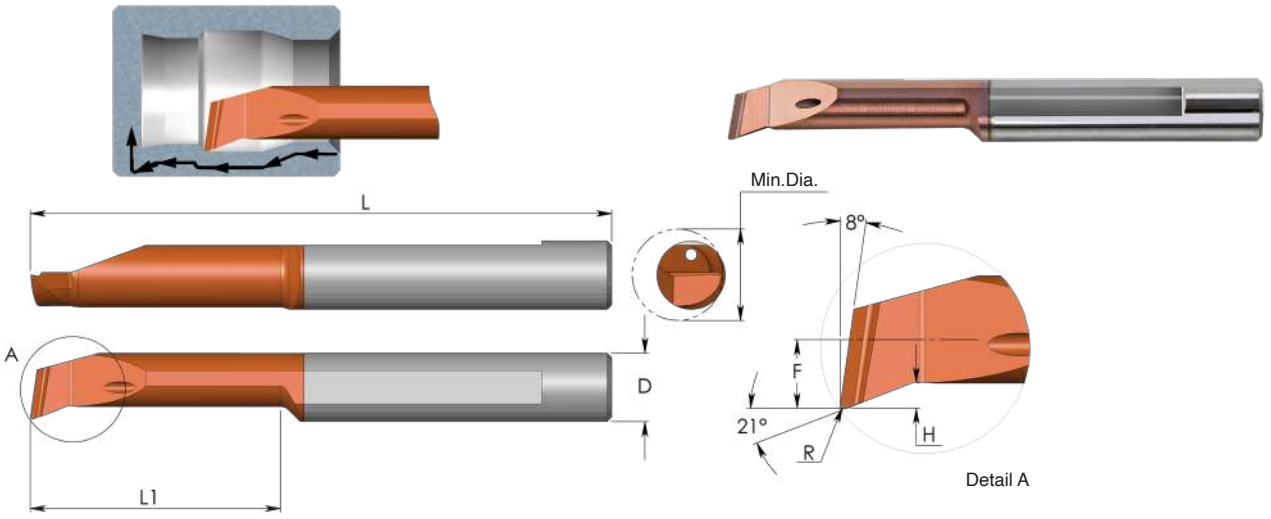

Grade	P	M	K	N	S	H
TNX	●	●	●	●	●	●

D	Ordering Code	L	L1	R	H	F	Min. Dia.	Holder
4.0	CBR 4 R0.2 L10	51	10	0.2	0.4	1.8	4.1	SIM ... H4
	CBR 4 R0.2 L15	51	15	0.2	0.4	1.8	4.1	
5.0	CBR 5 R0.2 L15	51	15	0.2	0.8	2.3	5.1	SIM ... H5
	CBR 5 R0.2 L22	51	22	0.2	0.8	2.3	5.1	
6.0	CBR 6 R0.2 L15	51	15	0.2	1.0	2.8	6.1	SIM ... H6
	CBR 6 R0.2 L22	51	22	0.2	1.0	2.8	6.1	

Order example: CBR 5 R0.2 L15 TNX

For L.H. bars specify CBL instead of CBR

For additional holders see page A06-32 to 41

● First choice ○ Alternative

CMR *Multi-Task Tiny Bars*

Multi-Task Tiny Tool CMR for Boring, Turning, Facing and Chamfering with a single tool

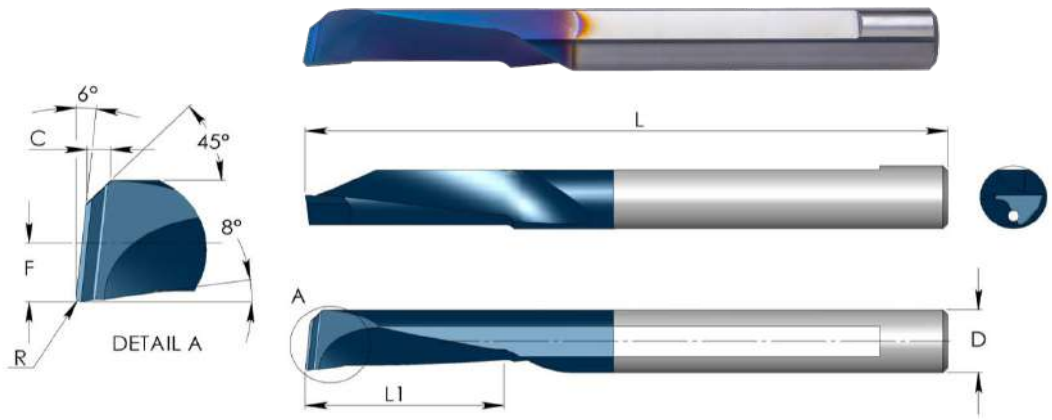

Grade	P	M	K	N	S	H
BMK	●	●	●	○	●	●

D	Ordering Code	L	L1	R	F	C	Hole Dia.*	Holder
4.0	**CMR 4 R0.1 L10**	51	10	0.1	1.8	1.1	4.0	SIM...H4
	CMR 4 R0.1 L15	51	15	0.1	1.8	1.1	4.0	
5.0	**CMR 5 R0.2 L10**	51	10	0.2	2.1	1.3	5.0	SIM...H5
	CMR 5 R0.2 L15	51	15	0.2	2.1	1.3	5.0	
6.0	**CMR 6 R0.2 L12**	58	12	0.2	2.8	1.5	6.0	SIM...H6
	CMR 6 R0.2 L18	58	18	0.2	2.8	1.5	6.0	

Order example: CMR 6 R0.2 L12 BMK

● First choice ○ Alternative

For L.H. bars specify CML instead of CMR

* The minimum diameter the tool can produce from full material

For additional holders see page A06-32 to 41

Demonstration

MXR Bars *Back Turning*

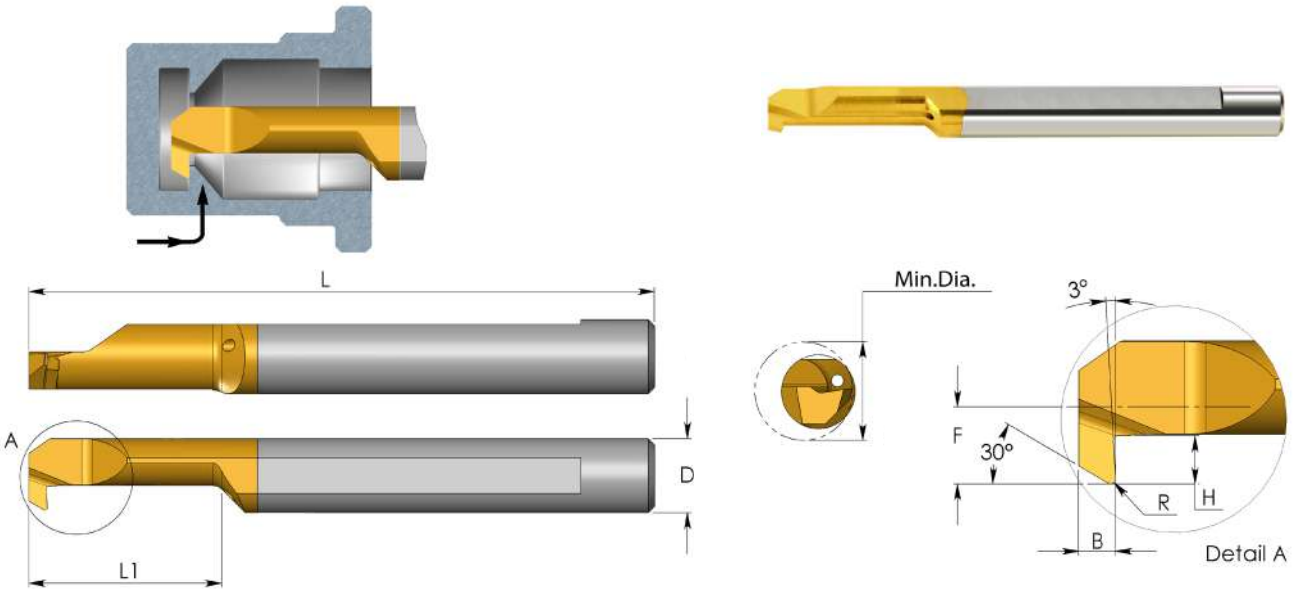

Grade	P	M	K	N	S	H
K20		○	○	●	○	
BXC	●	●	●	○	●	●
BMK	●	●	●	○	●	●

D	Ordering Code	L	L1	B	R	H	F	Min. Dia.	Holder
4.0	**MXR 4 R0.1 L10**	51	10	1.3	0.10	0.5	1.3	3.1	SIM ... H4
4.0	**MXR 4 R0.15 L10**	51	10	1.3	0.15	0.8	1.7	4.1	SIM ... H4
	MXR 4 R0.15 L15	51	15	1.3	0.15	0.8	1.7	4.1	
5.0	**MXR 5 R0.2 L15**	51	15	1.5	0.20	1.0	2.3	5.1	SIM ... H5
	MXR 5 R0.2 L22	51	22	1.5	0.20	1.0	2.3	5.1	
6.0	**MXR 6 R0.2 L15**	51	15	1.5	0.20	1.8	2.8	6.1	SIM ... H6
	MXR 6 R0.2 L22	51	22	1.5	0.20	1.8	2.8	6.1	

Order example: MXR 4 R0.15 L15 BXC

● First choice ○ Alternative

For L.H. bars specify MXL instead of MXR

For additional holders see page A06-32 to 41

MPR Bars *Profiling and Boring*

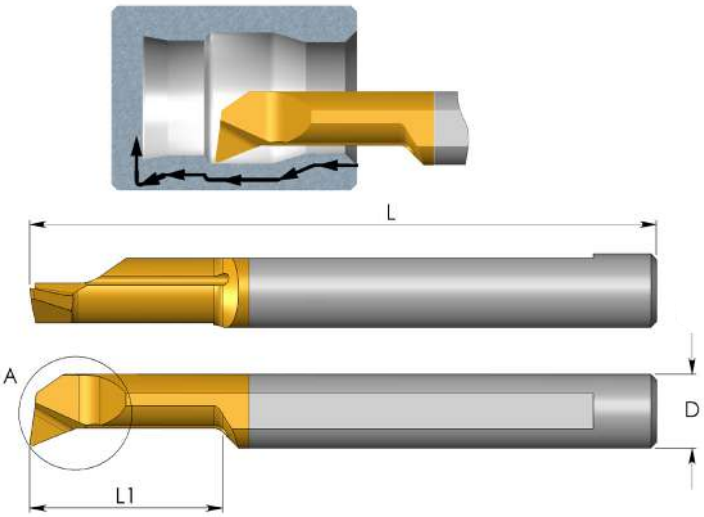

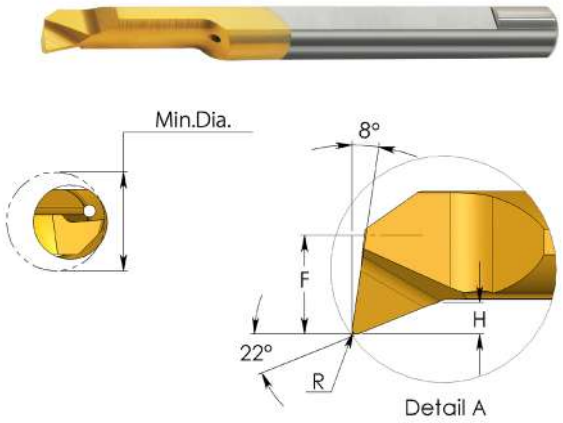

Grade	P	M	K	N	S	H
K20		○	○	●	○	
BXC	●	●	●	○	●	●
BMK	●	●	●	○	●	●

D	Ordering Code	L	L1	R	H	F	Min. Dia.	Holder
3.0	MPR 1 R0.05 L4	39	4	0.05	0.2	0.5	1.0	SIM ... H3
	MPR 1 R0.05 L8	39	8	0.05	0.2	0.5	1.0	
3.0	MPR 1.2 R0.1 L5	39	5	0.10	0.3	0.6	1.2	SIM ... H3
	MPR 1.2 R0.1 L9	39	9	0.10	0.3	0.6	1.2	
3.0	MPR 1.5 R0.05 L10	39	10	0.05	0.3	0.7	1.5	SIM ... H3
	MPR 1.5 R0.1 L6	39	6	0.10	0.3	0.7	1.5	
	MPR 1.5 R0.1 L10	39	10	0.10	0.3	0.7	1.5	
3.0	MPR 2 R0.05 L10	39	10	0.05	0.5	0.8	2.1	SIM ... H3
	MPR 2 R0.1 L10	39	10	0.10	0.5	0.8	2.1	
	MPR 2 R0.15 L5	39	5	0.15	0.5	0.8	2.1	
	MPR 2 R0.15 L10	39	10	0.15	0.5	0.8	2.1	
	MPR 2 R0.15 L15	39	15	0.15	0.5	0.8	2.1	
4.0	MPR 2.5 R0.1 L10	51	10	0.10	0.6	1.0	2.5	SIM ... H4
	MPR 2.5 R0.1 L15	51	15	0.10	0.6	1.0	2.5	
3.0	MPR 3 R0.05 L10	39	10	0.05	0.7	1.3	3.1	SIM ... H3
	MPR 3 R0.05 L15	39	15	0.05	0.7	1.3	3.1	
	MPR 3 R0.1 L10	39	10	0.10	0.7	1.3	3.1	
	MPR 3 R0.1 L15	39	15	0.10	0.7	1.3	3.1	
	MPR 3 R0.1 L22	47	22	0.10	0.7	1.3	3.1	
	MPR 3 R0.2 L10	39	10	0.20	0.7	1.3	3.1	
	MPR 3 R0.2 L15	39	15	0.20	0.7	1.3	3.1	
	MPR 3 R0.2 L22	47	22	0.20	0.7	1.3	3.1	
4.0	MPR 4 R0.1 L10	51	10	0.10	0.8	1.7	4.1	SIM ... H4
	MPR 4 R0.1 L15	51	15	0.10	0.8	1.7	4.1	
	MPR 4 R0.1 L22	51	22	0.10	0.8	1.7	4.1	
	MPR 4 R0.2 L10	51	10	0.20	0.8	1.7	4.1	
	MPR 4 R0.2 L15	51	15	0.20	0.8	1.7	4.1	
	MPR 4 R0.2 L22	51	22	0.20	0.8	1.7	4.1	
	MPR 4 R0.2 L30	62	30	0.20	0.8	1.7	4.1	

For additional holders see page A06-32 to 41

● First choice ○ Alternative

MPR Bars *Profiling and Boring*

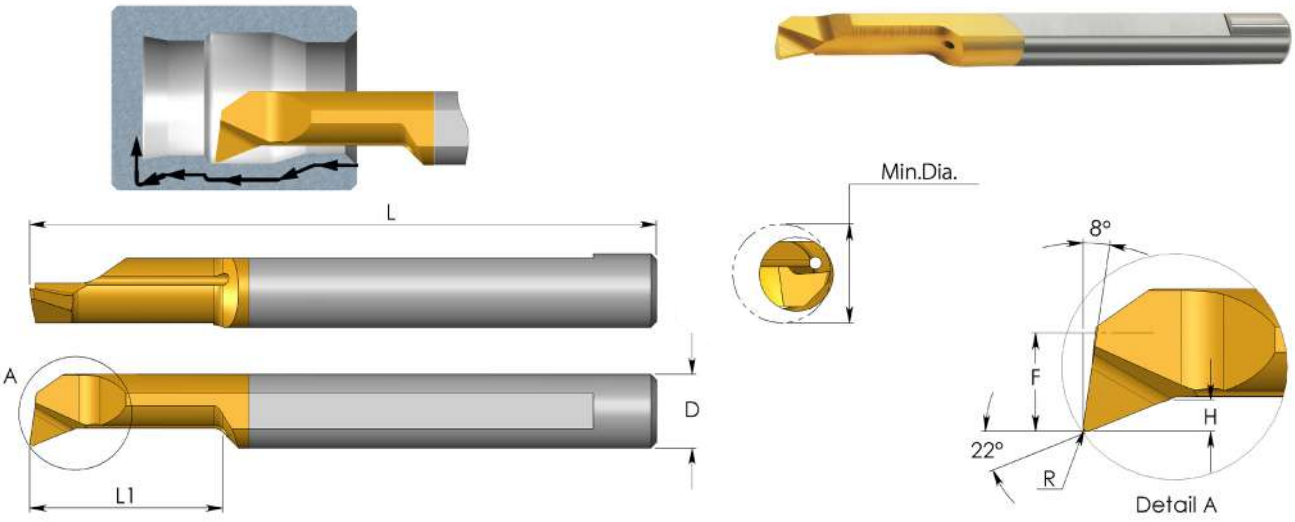

D	Ordering Code	L	L1	R	H	F	Min. Dia.	Holder
5.0	MPR 5 R0.1 L22	51	22	0.10	1.2	2.1	5.1	SIM ... H5
	MPR 5 R0.1 L30	76	30	0.10	1.2	2.1	5.1	
	MPR 5 R0.2 L10	51	10	0.20	1.2	2.1	5.1	
	MPR 5 R0.2 L15	51	15	0.20	1.2	2.1	5.1	
	MPR 5 R0.2 L22	51	22	0.20	1.2	2.1	5.1	
	MPR 5 R0.2 L30	76	30	0.20	1.2	2.1	5.1	
	MPR 5 R0.2 L40	76	40	0.20	0.9	2.1	5.1	
6.0	MPR 6 R0.2 L10	51	10	0.20	1.4	2.8	6.1	SIM ... H6
	MPR 6 R0.2 L15	51	15	0.20	1.4	2.8	6.1	
	MPR 6 R0.2 L22	51	22	0.20	1.4	2.8	6.1	
	MPR 6 R0.2 L30	76	30	0.20	1.4	2.8	6.1	
	MPR 6 R0.2 L40	76	40	0.20	1.0	2.8	6.1	
7.0	MPR 7 R0.2 L22	62	22	0.20	1.5	3.3	7.1	SIM ... H7
	MPR 7 R0.2 L30	62	30	0.20	1.5	3.3	7.1	
	MPR 7 R0.2 L35	62	35	0.20	1.5	3.3	7.1	
8.0	MPR 8 R0.2 L15	64	15	0.20	1.6	3.8	8.1	SIM ... H8
	MPR 8 R0.2 L22	64	22	0.20	1.6	3.8	8.1	
	MPR 8 R0.2 L35	76	35	0.20	1.6	3.8	8.1	
10.0	MPR 10 R0.2 L35	73	35	0.20	2.0	4.8	10.1	SIM ... H10

Order example: MPR 4 R0.2 L15 BXC
For L.H. Bars specify MPL instead of MPR
For additional holders see page A06-32 to 41

MUR Bars *Profiling, 90° Face Cutting*

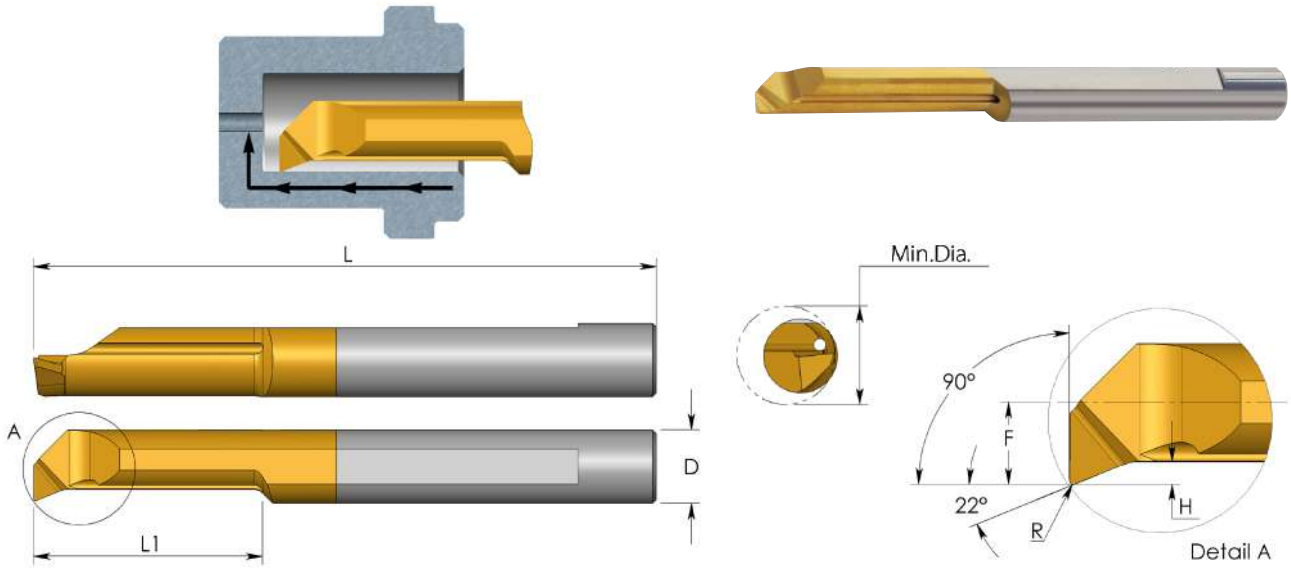

Grade	P	M	K	N	S	H
K20		○	○	●	○	
BXC	●	●	●	○	●	●
BMK	●	●	●	○	●	●

D	Ordering Code	L	L1	R	H	F	Min. Dia.	Holder
3.0	**MUR 3 R0.05 L10**	39	10	0.05	0.4	1.3	3.1	SIM ... H3
	MUR 3 R0.05 L15	39	15	0.05	0.4	1.3	3.1	
4.0	**MUR 4 R0.1 L10**	51	10	0.10	0.5	1.7	4.1	SIM ... H4
	MUR 4 R0.1 L15	51	15	0.10	0.5	1.7	4.1	
5.0	**MUR 5 R0.15 L15**	51	15	0.15	0.7	2.1	5.1	SIM ... H5
	MUR 5 R0.15 L22	51	22	0.15	0.7	2.1	5.1	
6.0	**MUR 6 R0.15 L15**	51	15	0.15	0.9	2.8	6.1	SIM ... H6
	MUR 6 R0.15 L22	51	22	0.15	0.9	2.8	6.1	
8.0	**MUR 8 R0.2 L22**	64	22	0.20	1.1	3.8	8.1	SIM ... H8

Order example: MUR 5 R0.15 L15 BXC

● First choice ○ Alternative

For L.H. bars specify MUL instead of MUR

For additional holders see page A06-32 to 41

MQR Bars *Profiling and Boring*

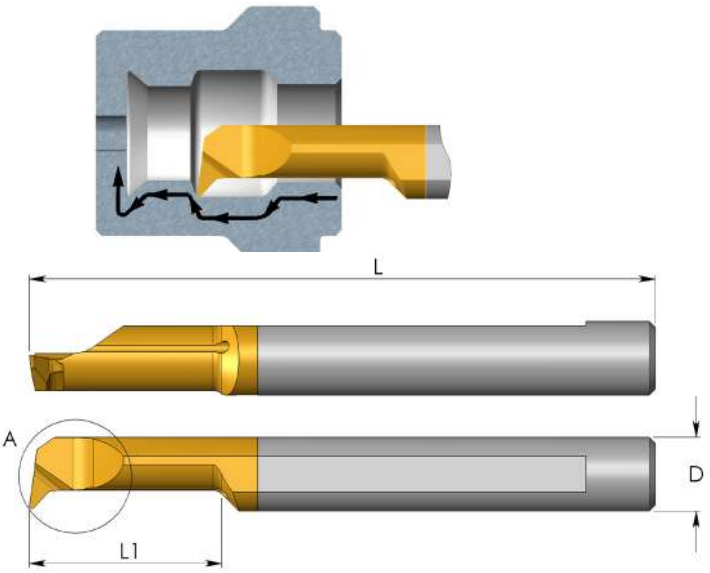



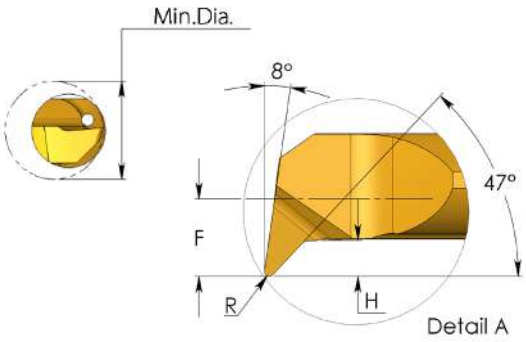

Grade	P	M	K	N	S	H
K20		○	○	●	○	
BXC	●	●	●	○	●	●
BMK	●	●	●	○	●	●

D	Ordering Code	L	L1	R	H	F	Min. Dia.	Holder
3.0	**MQR 3 R0.1 L10**	39	10	0.10	0.6	1.3	3.1	SIM ... H3
	MQR 3 R0.1 L15	39	15	0.10	0.6	1.3	3.1	
4.0	**MQR 4 R0.1 L22**	51	22	0.10	0.8	1.8	4.1	SIM ... H4
	MQR 4 R0.2 L10	51	10	0.20	0.8	1.8	4.1	
	MQR 4 R0.2 L15	51	15	0.20	0.8	1.8	4.1	
	MQR 4 R0.2 L22	51	22	0.20	0.8	1.8	4.1	
5.0	**MQR 5 R0.2 L15**	51	15	0.20	1.0	2.3	5.1	SIM ... H5
	MQR 5 R0.2 L22	51	22	0.20	1.0	2.3	5.1	
6.0	**MQR 6 R0.2 L15**	51	15	0.20	1.4	2.8	6.1	SIM ... H6
	MQR 6 R0.2 L22	51	22	0.20	1.4	2.8	6.1	
	MQR 6 R0.2 L30	58	30	0.20	1.4	2.8	6.1	
8.0	**MQR 8 R0.2 L22**	64	22	0.20	1.6	3.8	8.1	SIM ... H8
	MQR 8 R0.2 L27	64	27	0.20	2.0	3.8	8.1	

Order example: MQR 5 R0.2 L15 BXC

● First choice ○ Alternative

For L.H. bars specify MQL instead of MQR

For additional holders see page A06-32 to 41

MIR Bars *Threading*

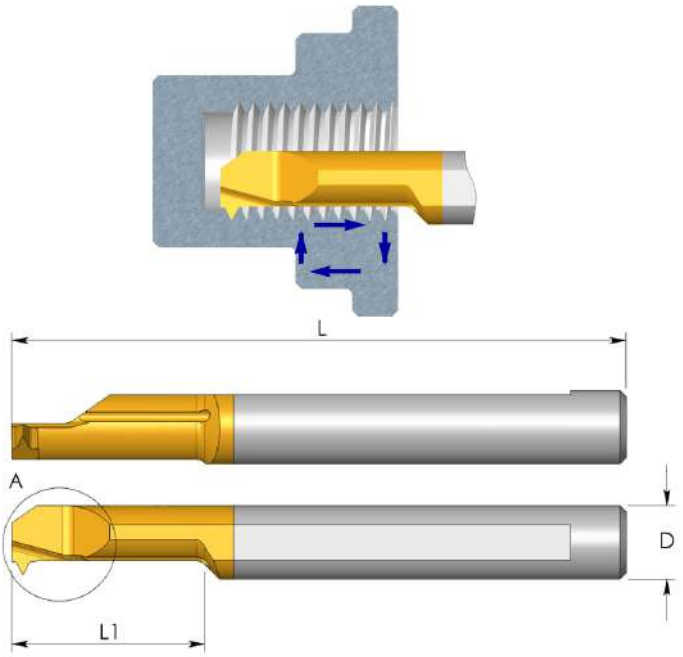

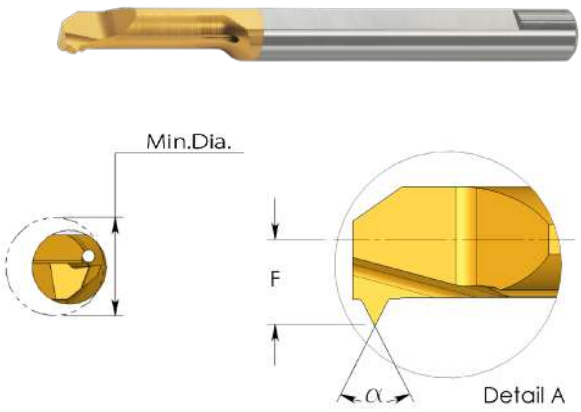

Grade	P	M	K	N	S	H
K20		○	○	●	○	
BXC	●	●	●	○	●	●
BMK	●	●	●	○	●	●

Partial Profile 55°

D	Ordering Code	Pitch Range mm	Pitch Range TPI	L	L1	α	F	Min. Dia.	Holder
3.0	**MIR 3 L15 A55**	0.5 - 1.0	48 - 24	39	15	55	1.4	3.2	SIM ... H3
4.0	**MIR 4 L15 A55**	0.5 - 1.0	48 - 24	51	15	55	1.8	4.1	SIM ... H4
5.0	**MIR 5 L15 A55**	0.5 - 1.25	48 - 20	51	15	55	2.3	5.1	SIM ... H5
	MIR 5 L22 A55	0.5 - 1.25	48 - 20	51	22	55	2.3	5.1	
6.0	**MIR 6 L15 A55**	0.5 - 1.5	48 - 16	51	15	55	2.6	6.0	SIM ... H6
	MIR 6 L22 A55	0.5 - 1.5	48 - 16	51	22	55	2.6	6.0	

Order example: MIR 5 L15 A55 BXC

Partial Profile 60°

D	Ordering Code	Pitch Range mm	Pitch Range TPI	L	L1	α	F	Min. Dia.	Holder
3.0	**MIR 1 L5 A60**	0.25 - 0.35	100 - 72	39	4.8	60	0.55	1.2	SIM ... H3
	MIR 1.5 L6 A60	0.35 - 0.45	72 - 56	39	6.3	60	0.65	1.4	
3.0	**MIR 2 L8 A60**	0.45 - 0.7	56 - 32	39	8	60	1.0	2.1	SIM ... H3
3.0	**MIR 3 L15 A60**	0.7 - 1.0	32 - 24	39	15	60	1.4	3.2	SIM ... H3
4.0	**MIR 4 L17 A60**	0.35 - 0.45	72 - 56	51	17	60	1.8	4.1	SIM ... H4
	MIR 4 L15 A60	0.8 - 1.0	32 - 24	51	15	60	1.8	4.1	
5.0	**MIR 5 L15 A60**	1.0 - 1.25	24 - 20	51	15	60	2.3	5.1	SIM ... H5
	MIR 5 L22 A60	1.0 - 1.25	24 - 20	51	22	60	2.3	5.1	
6.0	**MIR 6 L15 A60**	1.0 - 1.5	24 - 16	51	15	60	2.6	6.0	SIM ... H6
	MIR 6 L22 A60	1.0 - 1.5	24 - 16	51	22	60	2.6	6.0	
8.0	**MIR 8 L22 A60**	1.0 - 2.0	24 - 13	64	22	60	3.6	8.0	SIM ... H8

Order example: MIR 5 L15 A60 BXC
For L.H. bars specify MIL instead of MIR
For additional holders see page A06-32 to 41

● First choice ○ Alternative

MIR Bars *Threading*

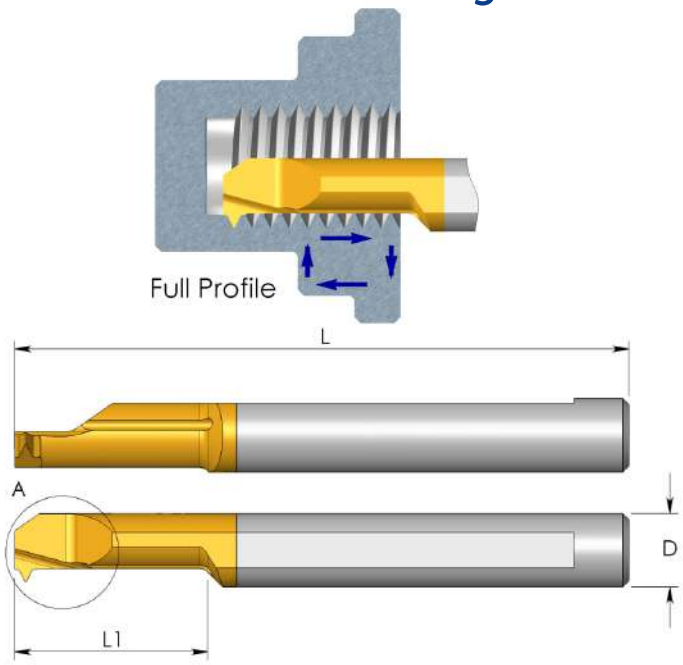



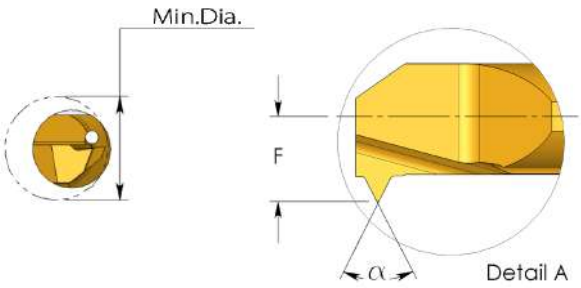

Grade	P	M	K	N	S	H
K20		○	○	●	○	
BXC	●	●	●	○	●	●
BMK	●	●	●	○	●	●

Full Profile - ISO 60°

D	Ordering Code	Pitch mm	M Coarse	M Fine	L	L1	α	F	Min. Dia.	Holder
3.0	**MIR 3 L10 0.5 ISO**	0.5	M3	M3.5	39	10	60	1.0	2.4	SIM ... H3
3.0	**MIR 3 L15 0.5 ISO**	0.5		M4	39	15	60	1.4	3.2	SIM ... H3
	MIR 3 L15 0.7 ISO	0.7	M4		39	15	60	1.4	3.2	
	MIR 3 L15 0.75 ISO	0.75	M4.5		39	15	60	1.4	3.2	
4.0	**MIR 4 L15 0.5 ISO**	0.5		M5	51	15	60	1.8	4.1	SIM ... H4
	MIR 4 L15 0.75 ISO	0.75		M5	51	15	60	1.8	4.1	
	MIR 4 L15 0.8 ISO	0.8	M5		51	15	60	1.8	4.1	
5.0	**MIR 5 L15 1.0 ISO**	1.0	M6, M7	M8	51	15	60	2.2	4.9	SIM ... H5
6.0	**MIR 6 L22 1.25 ISO**	1.25	M8, M9	M10	51	22	60	2.8	6.1	SIM ... H6
	MIR 6 L22 1.5 ISO	1.5	M10, M11		51	22	60	2.8	6.1	

Order example: MIR 5 L15 1.0 ISO BXC

Full Profile - UN 60°

D	Ordering Code	Pitch TPI	UNC	UNF	UNEF	UNS	L	L1	α	F	Min. Dia.	Holder
3.0	**MIR 3 L10 32 UN**	32	6				39	10	60	1.0	2.7	SIM...H3
3.0	**MIR 3 L15 32 UN**	32	8	10			39	15	60	1.4	3.2	SIM...H3
	MIR 3 L15 36 UN	36		8		10	39	15	60	1.4	3.2	
4.0	**MIR 4 L15 36 UN**	36				12	51	15	60	1.8	4.1	SIM...H4
	MIR 4 L15 32 UN	32			12		51	15	60	1.8	4.1	
5.0	**MIR 5 L15 28 UN**	28		1/4			51	15	60	2.2	4.9	SIM...H5
	MIR 5 L18 20 UN	20	1/4				51	18	60	2.3	5.0	
6.0	**MIR 6 L18 24 UN**	24		5/16			51	18	60	2.8	6.5	SIM...H6
	MIR 6 L18 18 UN	18	5/6			3/8	51	18	60	2.8	6.2	

Order example: MIR 4 L15 36 UN BXC
For L.H. bars specify MIL instead of MIR
For additional holders see page A06-32 to 41

● First choice ○ Alternative

MIR Bars Threading

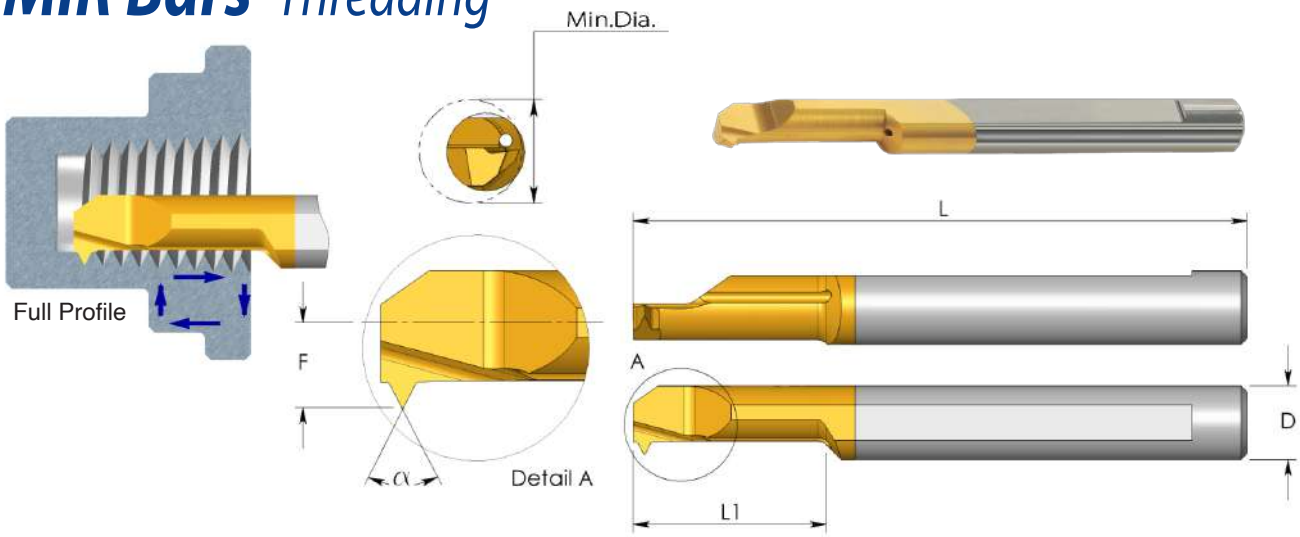

Grade	P	M	K	N	S	H
K20		○	○	●	○	
BXC	●	●	●	○	●	●
BMK	●	●	●	○	●	●

Full Profile - MJ 60°

D	Ordering Code	Thread Size	L	L1	α	F	Min. Dia.	Holder
3.0	**MIR 3 L15 0.7 MJ**	MJ4x0.7	39	15	60	1.4	3.2	SIM ... H3
4.0	**MIR 4 L15 0.8 MJ**	MJ5x0.8	51	15	60	1.8	4.1	SIM ... H4
5.0	**MIR 5 L15 1.0 MJ**	MJ6x1.0	51	15	60	2.2	4.9	SIM ... H5

Order example: MIR 4 L15 0.8 MJ BXC

Full Profile - UNJ 60°

D mm	Ordering Code	Thread Size	L	L1	α	F	Min. Dia.	Holder
3.0	**MIR 3 L15 32 UNJ**	8-32 UNJC	39	15	60	1.4	3.2	SIM...H3
5.0	**MIR 5 L15 28 UNJ**	1/4-28 UNJF	51	15	60	2.2	4.9	SIM...H5
	MIR 5 L18 20 UNJ	1/4-20 UNJC	51	18	60	2.3	5.0	SIM...H5

Order example: MIR 3 L15 32 UNJ BXC
For L.H. bars specify MIL instead of MIR
For additional holders see page A06-32 to 41

● First choice ○ Alternative

MIR Bars *Threading*

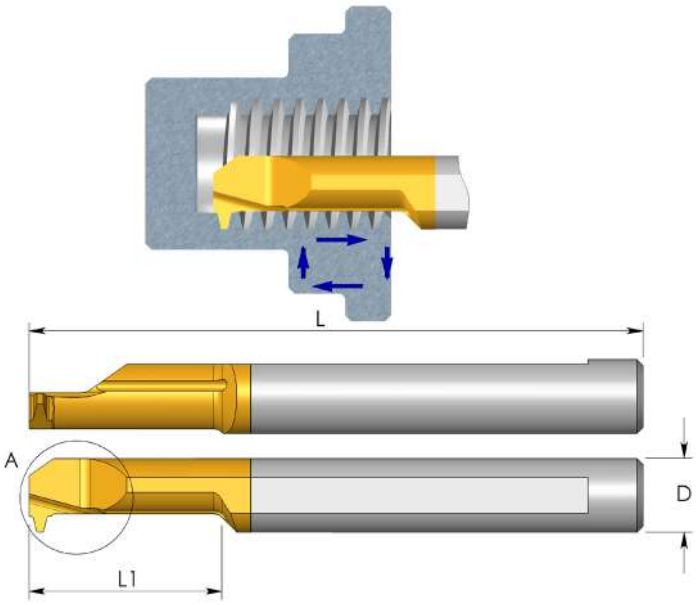

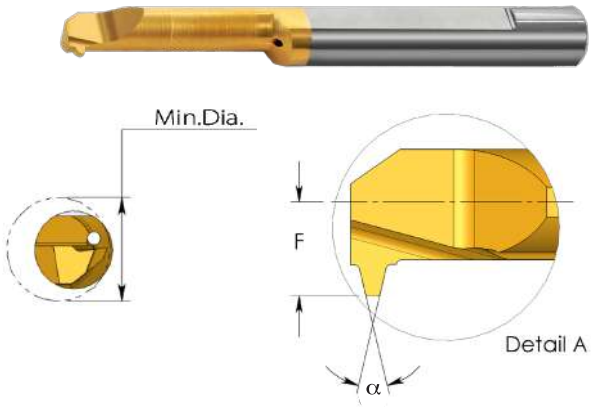

Grade	P	M	K	N	S	H
K20		○	○	●	○	
BXC	●	●	●	○	●	●
BMK	●	●	●	○	●	●

Full Profile - G 55° BSP

D	Ordering Code	Thread Size	L	L1	α	F	Min. Dia.	Holder
6.0	**MIR 6 L17 28 W**	1/16-28 BSP	51	17	55	2.8	6.5	SIM ... H6
	MIR 6 L17 19 W	1/4-19 BSP	51	17	55	2.8	7.0	

Full Profile - Whitworth 55° BSW

D	Ordering Code	Thread Size	L	L1	α	F	Min. Dia.	Holder
5.0	**MIR 5 L17 20 W**	1/4-20 BSW	51	17	55	2.0	4.7	SIM ... H5

Order example: MIR 6 L17 28 W BMK
For L.H. bars specify MIL instead of MIR
For additional holders see page A06-32 to 41

● First choice ○ Alternative

MIR Bars *Threading*

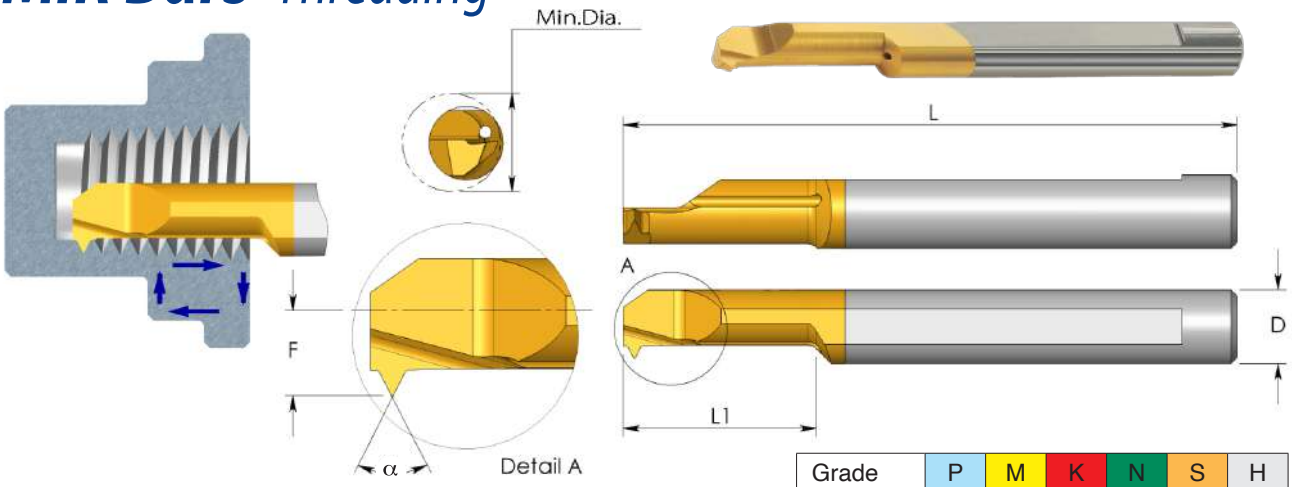

Grade	P	M	K	N	S	H
K20		○	○	●	○	
BXC	●	●	●	○	●	●
BMK	●	●	●	○	●	●

Full Profile - NPT 60°

D	Ordering Code	Pitch TPI	Thread Size	L	L1	α	F	Min. Dia.	Holder
6.0	**MIR 6 L15 27 NPT**	27	1/16 x 27 NPT 1/8 x 27 NPT	51	15	60	2.8	5.9	SIM ... H6

Order example: MIR 6 L15 27 NPT BXC

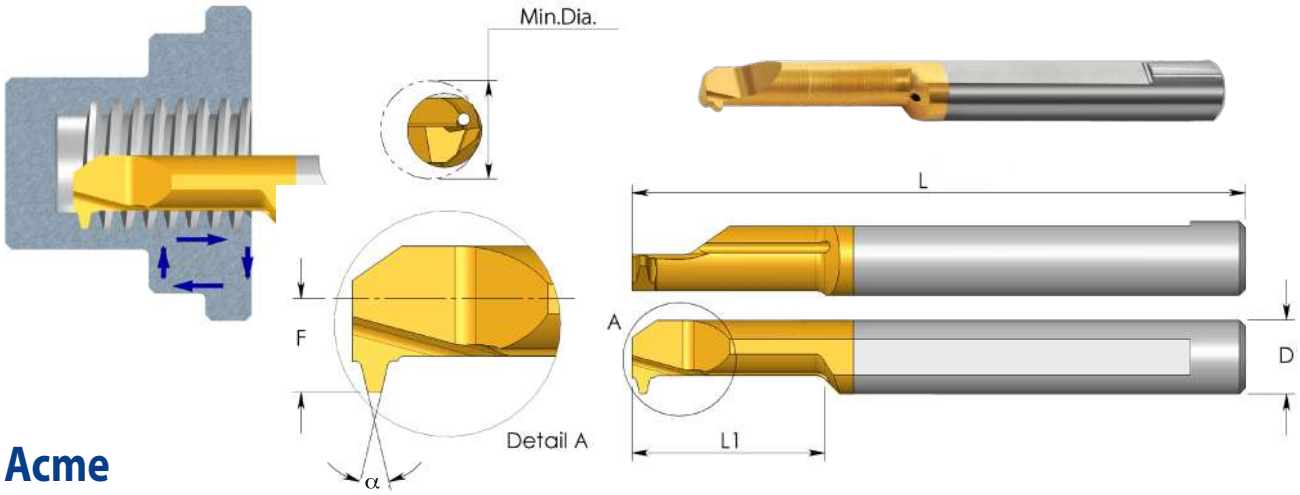

Acme

D	Ordering Code	Pitch TPI	Thread Size	L	L1	α	F	Min. Dia.	Holder
4.0	**MIR 4 L15 16 ACME**	16	1/4 x 16	51	15	29	1.8	4.6	SIM ... H4
6.0	**MIR 6 L20 14 ACME**	14	5/16 x 14	51	20	29	2.8	6.0	SIM ... H6
7.0	**MIR 7 L22 12 ACME**	12	3/8 x 12 7/16 x 12	62	22	29	3.3	7.2	SIM ... H7
8.0	**MIR 8 L30 10 ACME**	10	1/2 x 10	76	30	29	3.8	10.0	SIM ... H8
10.0	**MIR 10 L35 8 ACME**	8	5/8 x 8	73	35	29	4.8	12.5	SIM ... H10
10.0	**MIR 10 L45 6 ACME**	6	3/4 x 6 7/8 x 6	105	45	29	4.8	14.6	SIM ... H10
10.0	**MIR 10 L52 5 ACME**	5	1x5	105	52	29	4.8	20.0	SIM ... H10

Order example: MIR 6 L 20 14 ACME BXC
For L.H. bars specify MIL instead of MIR
For additional holders see page A06-32 to 41

● First choice ○ Alternative

MIR Bars *Threading*

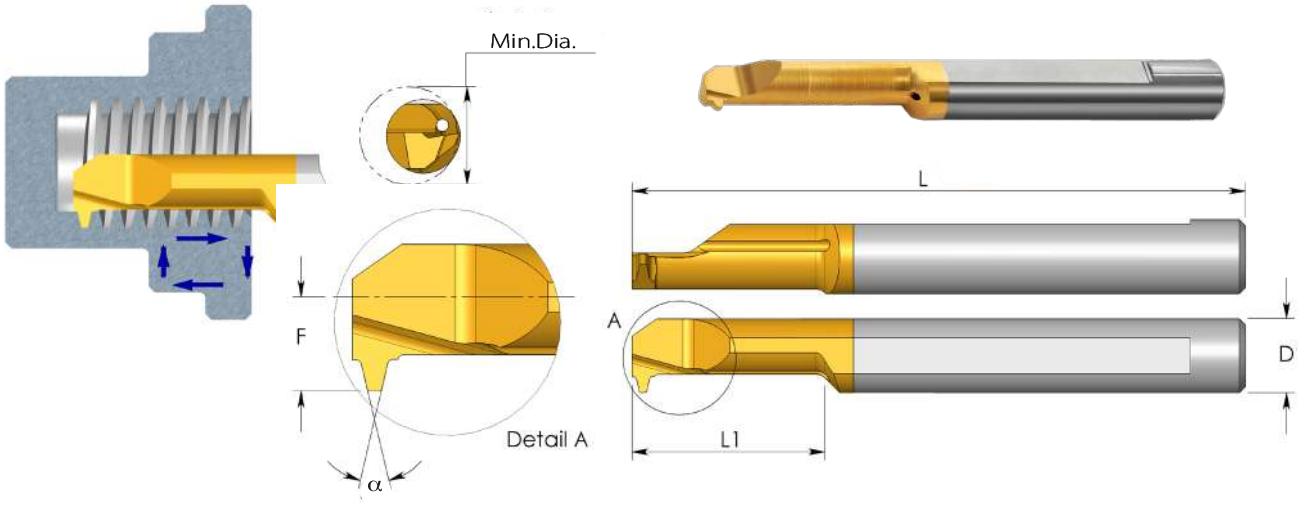

Grade	P	M	K	N	S	H
K20		○	○	●	○	
BXC	●	●	●	○	●	●
BMK	●	●	●	○	●	●

Stub Acme

D	Ordering Code	Pitch TPI	Thread Size	L	L1	α	F	Min. Dia.	Holder
4.0	**MIR 4 L15 16 STACME**	16	1/4 x 16	51	15	29	1.8	5.2	SIM ... H4
6.0	**MIR 6 L20 14 STACME**	14	5/16 x 14	51	20	29	2.8	6.6	SIM ... H6
7.0	**MIR 7 L22 12 STACME**	12	3/8 x 12 7/16 x 12	62	22	29	3.3	8.1	SIM ... H7
8.0	**MIR 8 L30 10 STACME**	10	1/2 x 10	76	30	29	3.8	11.0	SIM ... H8
10.0	**MIR 10 L35 8 STACME**	8	5/8 x 8	73	35	29	4.8	13.8	SIM ... H10
10.0	**MIR 10 L45 6 STACME**	6	3/4 x 6 7/8 x 6	105	45	29	4.8	16.3	SIM ... H10

Order example: MIR 7 L22 12 STACME K20

● First choice ○ Alternative

For additional holders see page A06-32 to 41

MIR Bars *Threading*

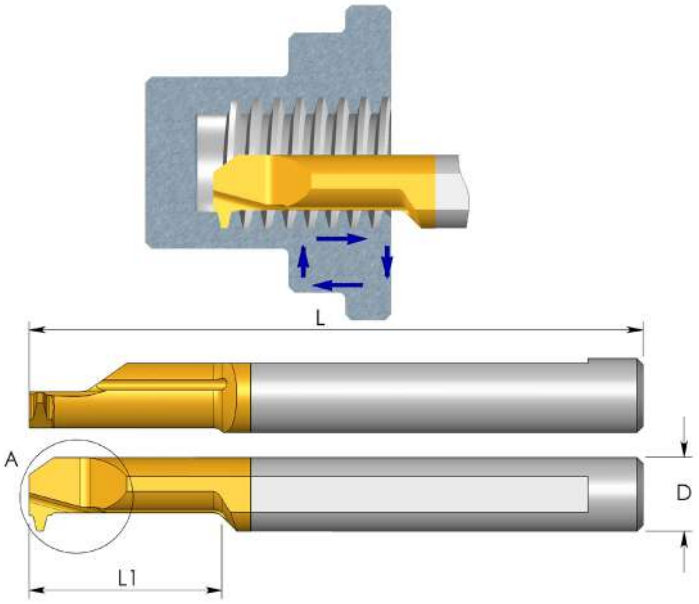

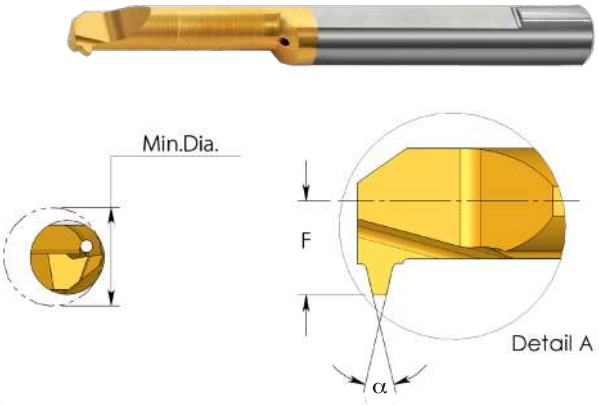

Grade	P	M	K	N	S	H
K20		○	○	●	○	
BXC	●	●	●	○	●	●
BMK	●	●	●	○	●	●

Trapez - DIN 103

D	Ordering Code	Pitch mm	Thread Size	L	L1	α	F	Min. Dia.	Holder
6.0	**MIR 6 L22 1.5 TR**	1.5	TR 8 x 1.5 TR 9 x 1.5 TR10 x 1.5	51	22	30	2.8	6.4	SIM ... H6
7.0	**MIR 7 L25 2 TR**	2	TR 9 x 2 TR10 x 2 TR11 x 2 TR12 x 2	62	25	30	3.2	6.9	SIM ... H7
10.0	**MIR 10 L35 2 TR**	2	TR14 x 2 TR16 x 2 TR18 x 2 TR20 x 2	73	35	30	4.8	11.0	SIM ... H10
7.0	**MIR 7 L35 3 TR**	3	TR11 x 3 TR12 x 3	62	35	30	3.3	7.5	SIM ... H7
10.0	**MIR 10 L35 3 TR**	3	TR14 x 3 TR22 x 3 TR24 x 3 TR26 x 3 TR28 x 3	73	35	30	4.8	10.5	SIM ... H10
10.0	**MIR 10 L45 4 TR**	4	TR16 x 4 TR18 x 4 TR20 x 4	105	45	30	4.8	11.5	SIM ... H10
10.0	**MIR 10 L55 5 TR**	5	TR22 x 5 TR24 x 5 TR28 x 5	105	55	30	4.8	11.0	SIM ... H10

Order example: MIR 10 L35 3 TR BXC
For L.H. bars specify MIL instead of MIR
For additional holders see page A06-32 to 41

● First choice ○ Alternative

MDR Bars *Thread Relief, Chamfering and Grooving*

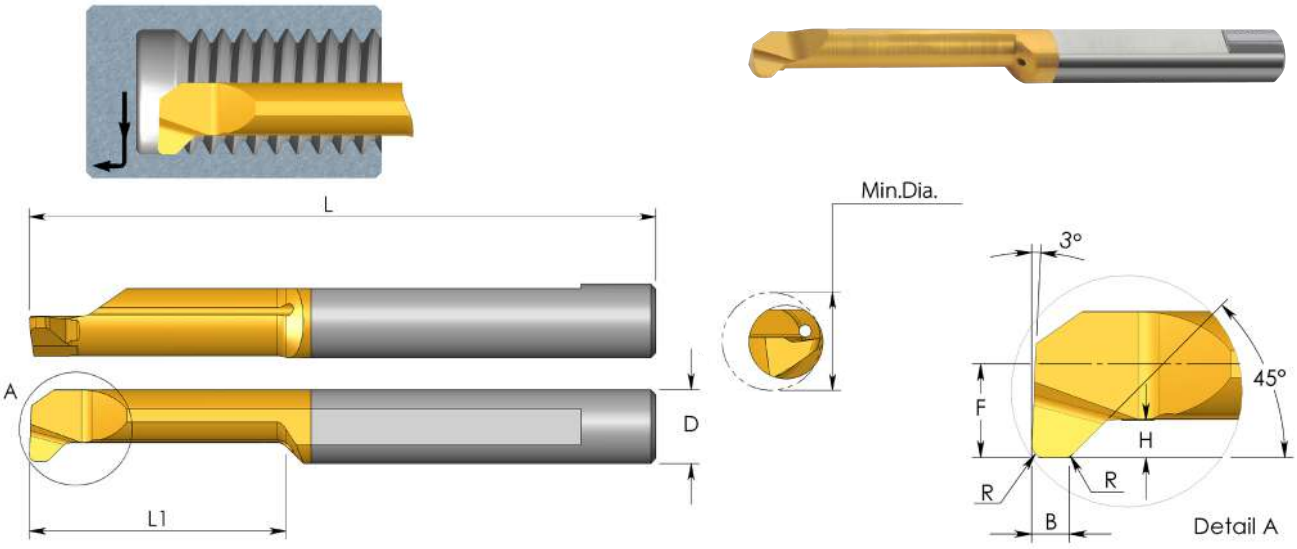

Grade	P	M	K	N	S	H
K20		○	○	●	○	
BXC	●	●	●	○	●	●
BMK	●	●	●	○	●	●

D	Ordering Code	L	L1	B	R	H	F	Min. Dia.	Holder
4.0	**MDR 4 R0.5 L18**	51	18	1.5	0.5	0.8	1.8	4.1	SIM ... H4
5.0	**MDR 5 R0.5 L24**	51	24	1.5	0.5	1.2	2.3	5.1	SIM ... H5
6.0	**MDR 6 R0.5 L27**	58	27	1.5	0.5	1.4	2.8	6.1	SIM ... H6

Order example: MDR 5 R0.5 L24 BXC

● First choice ○ Alternative

For L.H. bars specify MDL instead of MDR

For additional holders see page A06-32 to 41

MCR Bars *Chamfering and Boring*

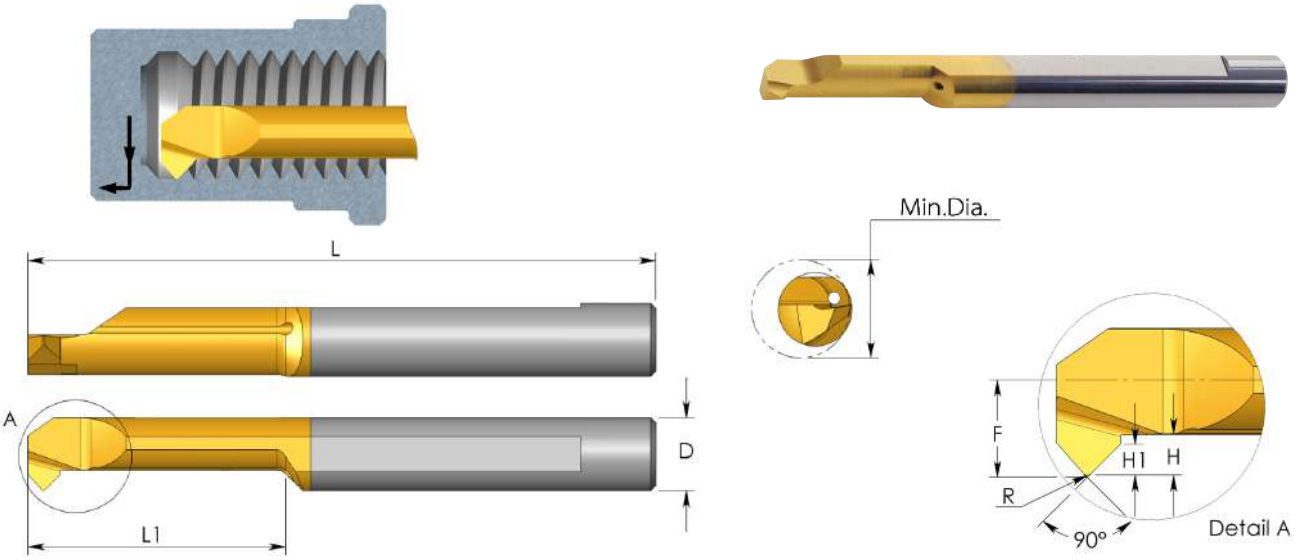

Grade	P	M	K	N	S	H
K20		○	○	●	○	
BXC	●	●	●	○	●	●
BMK	●	●	●	○	●	●

D	Ordering Code	L	L1	R	H	H1	F	Min. Dia.	Holder
3.0	**MCR 3 R0.2 L10**	39	10	0.2	0.7	0.3	1.3	3.1	SIM ... H3
4.0	**MCR 4 R0.2 L15**	51	15	0.2	0.8	0.4	1.7	4.1	SIM ... H4
5.0	**MCR 5 R0.2 L15**	51	15	0.2	1.2	0.7	2.1	5.1	SIM ... H5
6.0	**MCR 6 R0.2 L15**	51	15	0.2	1.4	0.7	2.8	6.1	SIM ... H6
7.0	**MCR 7 R0.2 L20**	62	20	0.2	1.5	0.8	3.3	7.1	SIM ... H7

Order example: MCR 4 R0.2 L15 BXC

● First choice ○ Alternative

For L.H. bars specify MCL instead of MCR

For additional holders see page A06-32 to 41

MWR Bars *Chamfering and Profiling*

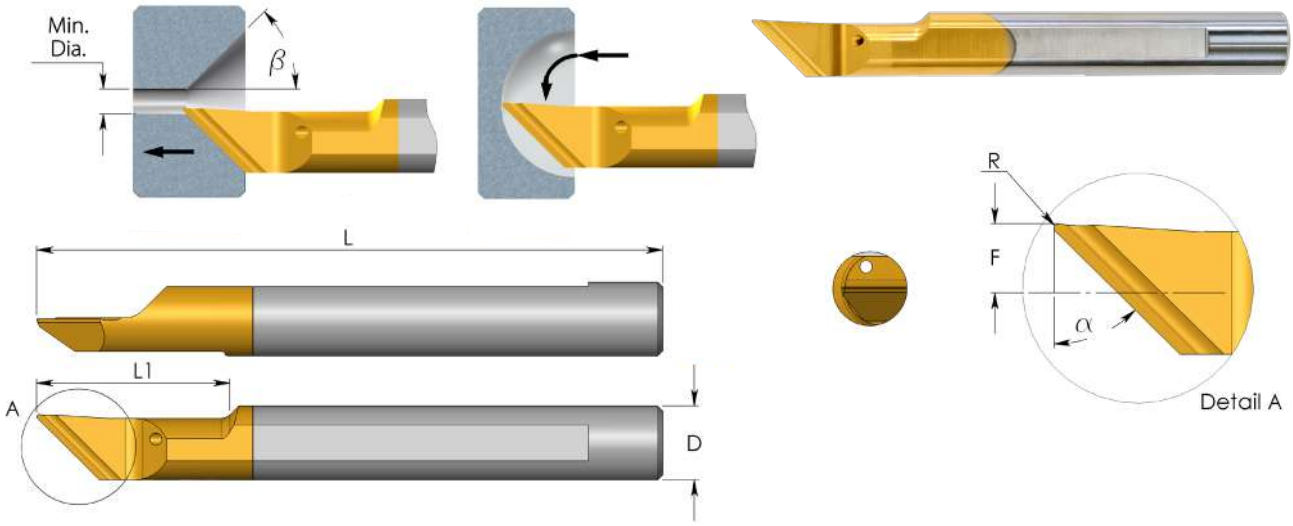

Grade	P	M	K	N	S	H
K20		○	○	●	○	
BXC	●	●	●	○	●	●
BMK	●	●	●	○	●	●

D	Ordering Code	L	L1	R	α	β	F	Min. Dia.	Holder
6.0	**MWR 6 R0.2 A90**	51	15	0.2	45°	45°	2.3	1.0	SIM ... H6
	MWR 6 R0.2 A60	51	15	0.2	60°	30°	2.3	1.0	
	*** MWR 6 R0.4 A90**	51	22	0.4	45°	45°	2.3	6.0	
	*** MWR 6 R0.4 A60**	51	22	0.4	60°	30°	2.3	6.0	

Order example: MWR 6 R0.2 A90 BXC

● First choice ○ Alternative

For L.H. bars specify MWL instead of MWR

*Can be used also for boring

For additional holders see page A06-32 to 41

MGR Bars Grooving

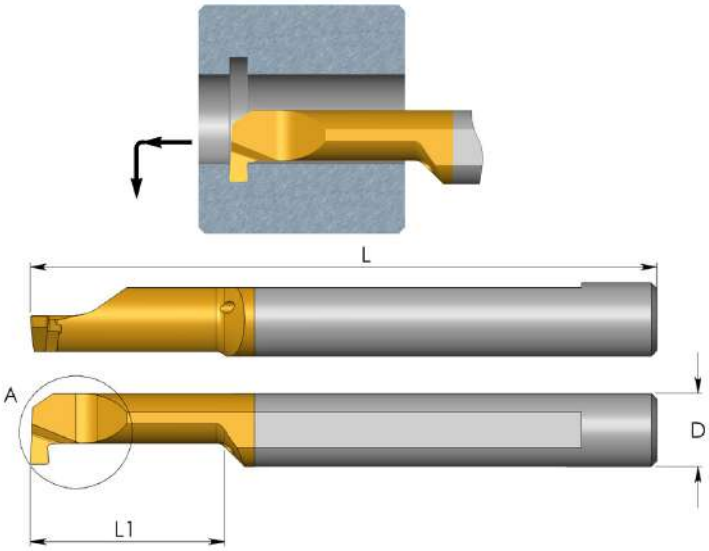

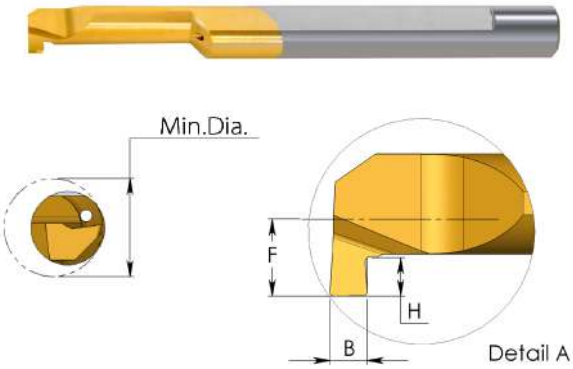

Grade	P	M	K	N	S	H
K20		○	○	●	○	
BXC	●	●	●	○	●	●
BMK	●	●	●	○	●	●

D	Ordering Code	L	L1	B mm	B in	H	F	Min. Dia.	Holder
4.0	MGR 2 B0.5 L10	51	10	0.5	.020	0.5	0.9	2.1	SIM ... H4
3.0	MGR 3 B0.5 L10	39	10	0.5	.020	0.5	1.3	3.1	SIM ... H3
	MGR 3 B0.7 L10	39	10	0.7	.028	0.6	1.3	3.1	
4.0	MGR 4 B0.5 L10	51	10	0.5	.020	0.5	1.7	4.1	SIM ... H4
	MGR 4 B0.5 L15	51	15	0.5	.028	0.5	1.7	4.1	
	MGR 4 B0.7 L10	51	10	0.7	.028	0.6	1.7	4.1	
	MGR 4 B0.79 L15	51	15	0.79	.031	0.9	1.7	4.1	
	MGR 4 B0.79 L22	51	22	0.79	.031	0.9	1.7	4.1	
	MGR 4 B1.0 L10	51	10	1.0	.039	1.0	1.7	4.1	
	MGR 4 B1.0 L15	51	15	1.0	.039	1.0	1.7	4.1	
	MGR 4 B1.0 L22	51	22	1.0	.039	1.0	1.7	4.1	
	MGR 4 B1.5 L10	51	10	1.5	.059	1.0	1.7	4.1	
	MGR 4 B1.5 L15	51	15	1.5	.059	1.0	1.7	4.1	
	MGR 4 B1.5 L22	51	22	1.5	.059	1.0	1.7	4.1	
5.0	MGR 5 B0.79 L15	51	15	0.79	.031	1.0	2.3	5.1	SIM ... H5
	MGR 5 B0.79 L22	51	22	0.79	.031	1.0	2.3	5.1	
	MGR 5 B1.0 L15	51	15	1.0	.039	1.2	2.3	5.1	
	MGR 5 B1.0 L22	51	22	1.0	.039	1.2	2.3	5.1	
	MGR 5 B1.19 L15	51	15	1.19	.047	1.2	2.3	5.1	
	MGR 5 B1.19 L22	51	22	1.19	.047	1.2	2.3	5.1	
	MGR 5 B1.5 L15	51	15	1.5	.059	1.2	2.3	5.1	
	MGR 5 B1.5 L22	51	22	1.5	.059	1.2	2.3	5.1	
	MGR 5 B1.59 L15	51	15	1.59	.063	1.2	2.3	5.1	
	MGR 5 B1.59 L22	51	22	1.59	.063	1.2	2.3	5.1	
	MGR 5 B2.0 L15	51	15	2.0	.079	1.2	2.3	5.1	
	MGR 5 B2.0 L22	51	22	2.0	.079	1.2	2.3	5.1	

For additional holders see page A06-32 to 41

● First choice ○ Alternative

MGR Bars Grooving

D	Ordering Code	L	L1	B		H	F	Min. Dia.	Holder
				mm	in				
6.0	MGR 6 B1.0 L15	51	15	1.0	.039	1.4	2.8	6.1	SIM ... H6
	MGR 6 B1.0 L22	51	22	1.0	.039	1.4	2.8	6.1	
	MGR 6 B1.5 L15	51	15	1.5	.059	1.4	2.8	6.1	
	MGR 6 B1.5 L22	51	22	1.5	.059	1.4	2.8	6.1	
	MGR 6 B2.0 L15	51	15	2.0	.079	1.4	2.8	6.1	
	MGR 6 B2.0 L22	51	22	2.0	.079	1.4	2.8	6.1	
6.0	MGR 6 B0.79 L17	51	17	0.79	.031	1.8	2.8	6.1	SIM ... H6
	MGR 6 B0.79 L23	51	23	0.79	.031	1.8	2.8	6.1	
	MGR 6 B1.0 L17	51	17	1.0	.039	1.8	2.8	6.1	
	MGR 6 B1.19 L17	51	17	1.19	.047	1.8	2.8	6.1	
	MGR 6 B1.19 L23	51	23	1.19	.047	1.8	2.8	6.1	
	MGR 6 B1.5 L17	51	17	1.5	.059	1.8	2.8	6.1	
	MGR 6 B1.5 L23	51	23	1.5	.059	1.8	2.8	6.1	
	MGR 6 B1.59 L17	51	17	1.59	.063	1.8	2.8	6.1	
	MGR 6 B1.59 L23	51	23	1.59	.063	1.8	2.8	6.1	
	MGR 6 B2.0 L17	51	17	2.0	.079	1.8	2.8	6.1	
	MGR 6 B2.0 L23	51	23	2.0	.079	1.8	2.8	6.1	
7.0	MGR 7 B1.0 L15	62	15	1.0	.039	2.5	3.3	7.1	SIM ... H7
	MGR 7 B1.0 L22	62	22	1.0	.039	2.5	3.3	7.1	
	MGR 7 B1.0 L30	62	30	1.0	.039	2.5	3.3	7.1	
	MGR 7 B1.19 L22	62	22	1.19	.047	2.5	3.3	7.1	
	MGR 7 B1.19 L30	62	30	1.19	.047	2.5	3.3	7.1	
	MGR 7 B1.5 L15	62	15	1.5	.059	2.5	3.3	7.1	
	MGR 7 B1.5 L22	62	22	1.5	.059	2.5	3.3	7.1	
	MGR 7 B1.5 L30	62	30	1.5	.059	2.5	3.3	7.1	
	MGR 7 B1.59 L22	62	22	1.59	.063	2.5	3.3	7.1	
	MGR 7 B1.59 L30	62	30	1.59	.063	2.5	3.3	7.1	
	MGR 7 B2.0 L15	62	15	2.0	.079	2.5	3.3	7.1	
	MGR 7 B2.0 L22	62	22	2.0	.079	2.5	3.3	7.1	
	MGR 7 B2.0 L30	62	30	2.0	.079	2.5	3.3	7.1	
8.0	MGR 8 B1.0 L22	64	22	1.0	.039	1.7	3.8	8.1	SIM ... H8
	MGR 8 B1.5 L22	64	22	1.5	.059	1.7	3.8	8.1	
	MGR 8 B2.0 L15	64	15	2.0	.079	2.6	3.8	8.1	
	MGR 8 B2.0 L22	64	22	2.0	.079	2.6	3.8	8.1	
	MGR 8 B2.38 L15	64	15	2.38	.094	2.6	3.8	8.1	
	MGR 8 B2.38 L22	64	22	2.38	.094	2.6	3.8	8.1	

Tolerance: B±0.025 mm/.001"

Order example: MGR 5 B1.5 L15 BXC

For L.H. bars specify MGL instead of MGR

For additional holders see page A06-32 to 41

MKR Bars *Full Radius Grooving*

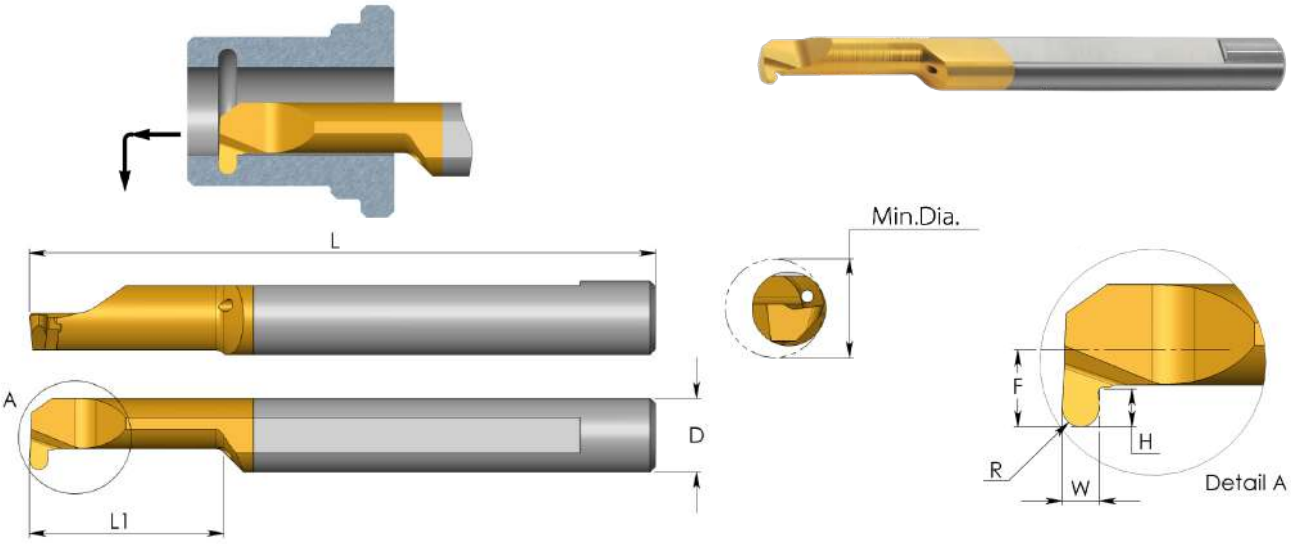

Grade	P	M	K	N	S	H
K20		○	○	●	○	
BXC	●	●	●	○	●	●
BMK	●	●	●	○	●	●

D	Ordering Code	L	L1	R	W	H	F	Min. Dia.	Holder
4.0	**MKR 4 R0.5 L10**	51	10	0.50	1.0	1.0	1.7	4.1	SIM ... H4
	MKR 4 R0.5 L15	51	15	0.50	1.0	1.0	1.7	4.1	
	MKR 4 R0.75 L10	51	10	0.75	1.5	1.0	1.7	4.1	
5.0	**MKR 5 R0.5 L15**	51	15	0.50	1.0	1.2	2.3	5.1	SIM ... H5
	MKR 5 R0.75 L15	51	15	0.75	1.5	1.2	2.3	5.1	
	MKR 5 R1.0 L15	51	15	1.00	2.0	1.2	2.3	5.1	
	MKR 5 R1.0 L22	51	22	1.00	2.0	1.2	2.3	5.1	
6.0	**MKR 6 R0.5 L15**	51	15	0.50	1.0	1.6	2.8	6.1	SIM ... H6
	MKR 6 R0.75 L15	51	15	0.75	1.5	1.6	2.8	6.1	
	MKR 6 R1.0 L15	51	15	1.00	2.0	1.6	2.8	6.1	
	MKR 6 R1.0 L23	51	23	1.00	2.0	1.8	2.8	6.1	
7.0	**MKR 7 R0.5 L22**	62	22	0.50	1.0	2.5	3.3	7.1	SIM ... H7
	MKR 7 R0.75 L22	62	22	0.75	1.5	2.5	3.3	7.1	
	MKR 7 R1.0 L22	62	22	1.00	2.0	2.5	3.3	7.1	

Tolerance: R±0.025 mm

● First choice ○ Alternative

Order example: MKR 5 R1.0 L15 BXC

For L.H. bars specify MKL instead of MKR

For additional holders see page A06-32 to 41

MFR Bars Face Grooving

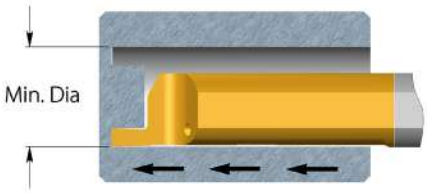



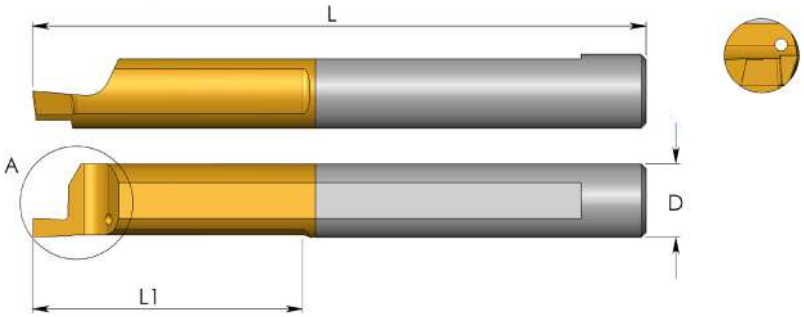

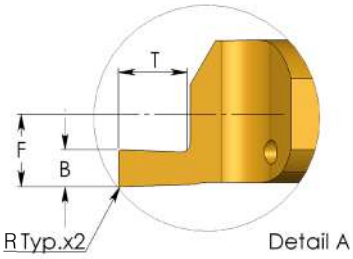

Grade	P	M	K	N	S	H
K20		○	○	●	○	
BXC	●	●	●	○	●	●
BMK	●	●	●	○	●	●

D	Ordering Code	L	L1	R	B	T	F	Min. Dia.	Holder
4.0	**MFR 4 B0.5 L15**	51	15	0.05	0.5	1.2	1.95	5.0	SIM ... H4
	MFR 4 B0.75 L15	51	15	0.1	0.75	1.2	1.95	5.0	
	MFR 4 B1.0 L15	51	15	0.1	1.0	1.5	1.95	5.0	
	MFR 4 B1.5 L15	51	15	0.1	1.5	2.8	1.95	5.0	
	MFR 4 B1.5 L17	51	17	0.1	1.5	3.5	1.95	5.0	
	MFR 4 B2.0 L17	51	17	0.1	2.0	5.0	1.95	5.0	
5.0	**MFR 5 B0.5 L22**	51	22	0.05	0.5	1.2	2.45	6.0	SIM ... H5
	MFR 5 B0.75 L22	51	22	0.1	0.75	1.2	2.45	6.0	
	MFR 5 B1.0 L22	51	22	0.1	1.0	1.5	2.45	6.0	
	MFR 5 B1.0 L23	51	23	0.1	1.0	2.5	2.45	6.0	
	MFR 5 B1.5 L22	51	22	0.1	1.5	2.5	2.45	6.0	
	MFR 5 B1.5 L23	51	23	0.1	1.5	3.5	2.45	6.0	
	MFR 5 B2.0 L22	51	22	0.1	2.0	3.8	2.45	6.0	
	MFR 5 B2.0 L23	51	23	0.1	2.0	5.0	2.45	6.0	
6.0	**MFR 6 B1.0 L22**	51	22	0.1	1.0	1.5	2.95	8.0	SIM ... H6
	MFR 6 B1.5 L22	51	22	0.1	1.5	2.5	2.95	8.0	
	MFR 6 B2.0 L22	51	22	0.1	2.0	3.0	2.95	8.0	
	MFR 6 B2.5 L22	51	22	0.1	2.5	4.8	2.95	8.0	
	MFR 6 B3.0 L30	58	30	0.1	3.0	6.0	2.95	8.0	
8.0	**MFR 8 B2.5 L22**	64	22	0.1	2.5	3.5	3.95	10.0	SIM ... H8

Order example: MFR 5 B1.0 L22 BXC

● First choice ○ Alternative

For additional holders see page A06-32 to 41

MFR Bars *Face Grooving with Chip Former*

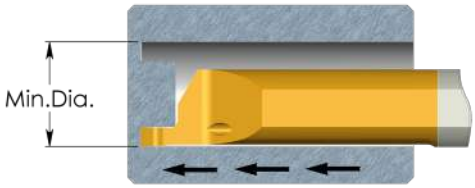



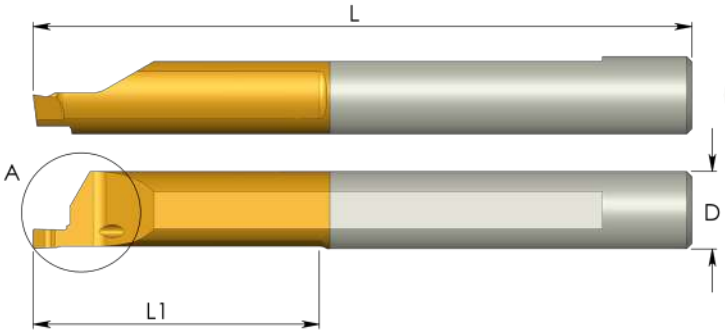

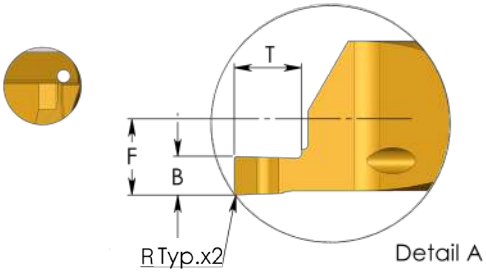

Grade	P	M	K	N	S	H
K20		○	○	●	○	
BXC	●	●	●	○	●	●
BMK	●	●	●	○	●	●

D	Ordering Code	L	L1	R	B	T	F	Min. Dia.	Holder
4.0	**MFR 4 B1.5 L15-C**	51	15	0.1	1.5	2.8	1.95	5.0	SIM ... H4
5.0	**MFR 5 B1.5 L22-C**	51	22	0.1	1.5	2.5	2.45	6.0	SIM ... H5
	MFR 5 B2.0 L22-C	51	22	0.1	2.0	3.8	2.45	6.0	
6.0	**MFR 6 B1.5 L22-C**	51	22	0.1	1.5	2.5	2.95	8.0	SIM ... H6
	MFR 6 B2.0 L22-C	51	22	0.1	2.0	3.0	2.95	8.0	
	MFR 6 B3.0 L22-C	51	22	0.1	3.0	6.0	2.95	8.0	

Order example: MFR 5 B2.0 L22-C BXC

● First choice ○ Alternative

For L.H. bars specify MFL instead of MFR

For additional holders see page A06-32 to 41

MFL Bars *Face Grooving*

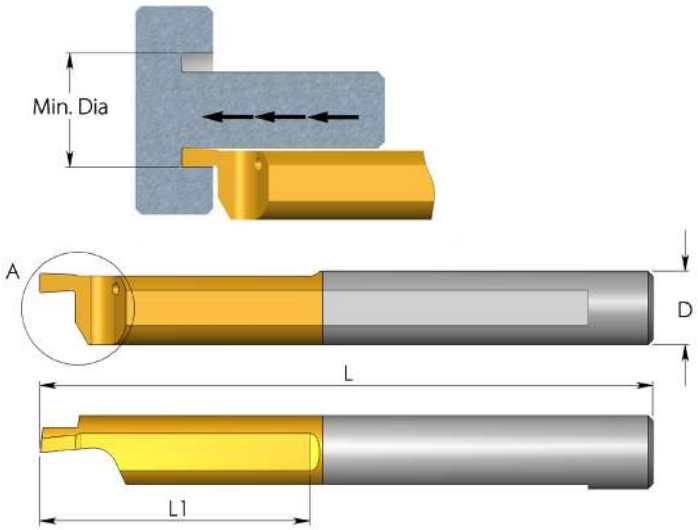

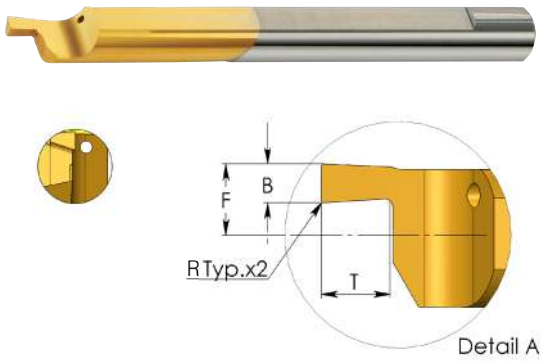

Grade	P	M	K	N	S	H
K20		○	○	●	○	
BXC	●	●	●	○	●	●
BMK	●	●	●	○	●	●

D	Ordering Code	L	L1	R	B	T	F	Min. Dia.	Holder
4.0	**MFL 4 B0.5 L15**	51	15	0.05	0.5	1.2	1.75	5.0	SIM ... H4
	MFL 4 B0.75 L15	51	15	0.10	0.75	1.2	1.75	5.0	
	MFL 4 B1.0 L15	51	15	0.10	1.0	1.5	1.75	5.0	
	MFL 4 B1.5 L15	51	15	0.10	1.5	2.8	1.75	5.0	
	MFL 4 B1.5 L17	51	17	0.10	1.5	3.5	1.75	5.0	
	MFL 4 B2.0 L17	51	17	0.10	2.0	5.0	1.75	5.0	
5.0	**MFL 5 B0.5 L22**	51	22	0.05	0.5	1.2	2.25	6.0	SIM ... H5
	MFL 5 B0.75 L22	51	22	0.10	0.75	1.2	2.25	6.0	
	MFL 5 B1.0 L22	51	22	0.10	1.0	1.5	2.25	6.0	
	MFL 5 B1.0 L23	51	23	0.10	1.0	2.5	2.25	6.0	
	MFL 5 B1.5 L22	51	22	0.10	1.5	2.5	2.25	6.0	
	MFL 5 B1.5 L23	51	23	0.10	1.5	3.5	2.25	6.0	
	MFL 5 B2.0 L22	51	22	0.10	2.0	3.8	2.25	6.0	
	MFL 5 B2.0 L23	51	23	0.10	2.0	5.0	2.25	6.0	
6.0	**MFL 6 B1.0 L22**	51	22	0.10	1.0	1.5	2.75	8.0	SIM ... H6
	MFL 6 B1.5 L22	51	22	0.10	1.5	2.5	2.75	8.0	
	MFL 6 B2.0 L22	51	22	0.10	2.0	3.0	2.75	8.0	
	MFL 6 B2.5 L22	51	22	0.10	2.5	4.8	2.75	8.0	
	MFL 6 B3.0 L30	58	30	0.10	3.0	6.0	2.75	8.0	
8.0	**MFL 8 B2.5 L22**	64	22	0.10	2.5	3.5	3.75	10.0	SIM ... H8

Order example: MFL 4 B2.0 L17 BMK

● First choice ○ Alternative

For additional holders see page A06-32 to 41

MVR Bars *Deep Face Grooving - with 2 coolant bores*

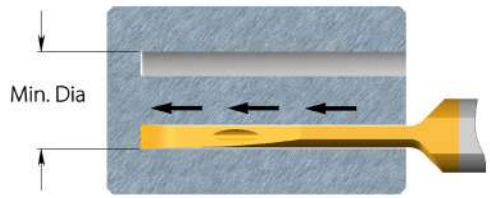



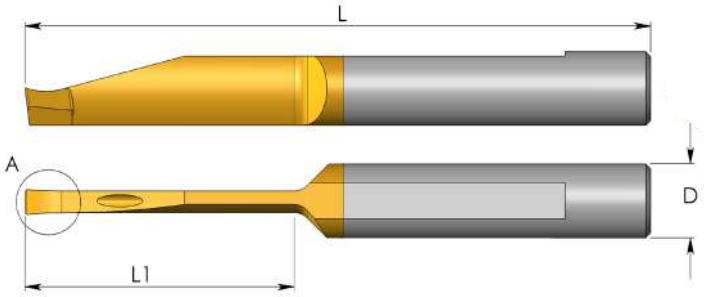



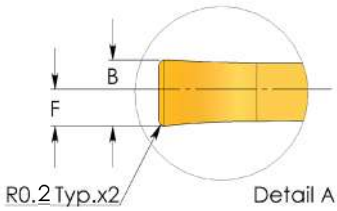

Grade	P	M	K	N	S	H
K20		○	○	●	○	
BXC	●	●	●	○	●	●
BMK	●	●	●	○	●	●

D	Ordering Code	L	L1	B	F	Min. Dia.	Holder
6.0	**MVR 6 B2.0 L10**	64	10	2.0	1.1	10.0	SIM ... H6
	MVR 6 B2.0 L15	64	15	2.0	1.1	12.0	
	MVR 6 B2.0 L22	64	22	2.0	1.1	12.0	
	MVR 6 B2.5 L15	64	15	2.5	1.4	10.0	
	MVR 6 B2.5 L22	64	22	2.5	1.4	12.0	
	MVR 6 B3.0 L22	64	22	3.0	1.6	10.0	
8.0	**MVR 8 B3.0 L27**	64	27	3.0	1.6	15.0	SIM ... H8
	MVR 8 B3.0 L43	80	43	3.0	1.6	15.0	
8.0	**MVR 8 B4.0 L43**	80	43	4.0	2.1	20.0	SIM ... H8

Order example: MVR 6 B2.0 L22 BXC

● First choice ○ Alternative

For L.H. bars specify MVL instead of MVR

For additional holders see page A06-32 to 41

MZR Bars *Face Grooving*

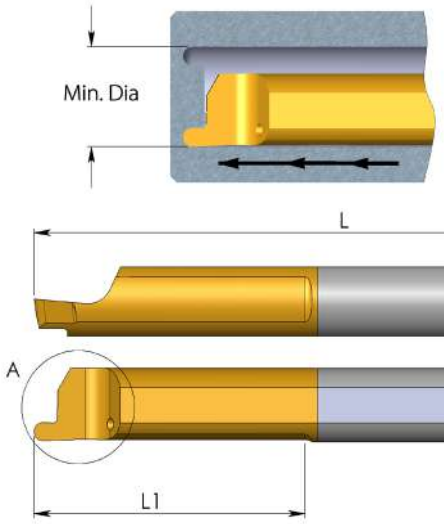





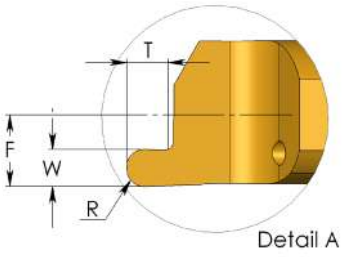

Grade	P	M	K	N	S	H
K20		○	○	●	○	
BXC	●	●	●	○	●	●
BMK	●	●	●	○	●	●

D	Ordering Code	L	L1	R	W	T	F	Min. Dia.	Holder
4.0	**MZR 4 R0.5 L15**	51	15	0.50	1.0	1.2	1.95	5.0	SIM ... H4
	MZR 4 R0.75 L15	51	15	0.75	1.5	1.5	1.95	5.0	
5.0	**MZR 5 R0.5 L22**	51	22	0.50	1.0	1.2	2.45	6.0	SIM ... H5
	MZR 5 R0.75 L22	51	22	0.75	1.5	1.5	2.45	6.0	
	MZR 5 R1.0 L22	51	22	1.00	2.0	2.5	2.45	6.0	
6.0	**MZR 6 R0.5 L22**	51	22	0.50	1.0	1.2	2.95	8.0	SIM ... H6
	MZR 6 R0.75 L22	51	22	0.75	1.5	1.5	2.95	8.0	
	MZR 6 R1.0 L22	51	22	1.00	2.0	2.5	2.95	8.0	

Order example: MZR 5 R0.5 L22 BXC

● First choice ○ Alternative

For additional holders see page A06-32 to 41

MZL Bars *Face Grooving*

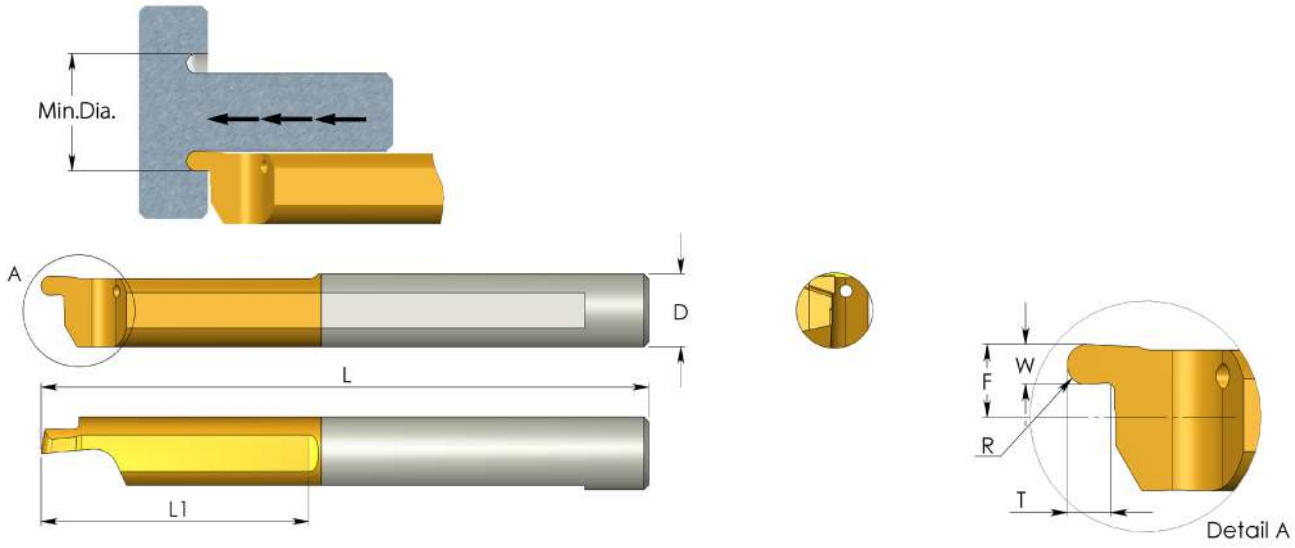

Grade	P	M	K	N	S	H
K20		○	○	●	○	
BXC	●	●	●	○	●	●
BMK	●	●	●	○	●	●

D	Ordering Code	L	L1	R	W	T	F	Min. Dia.	Holder
4.0	**MZL 4 R0.5 L15**	51	15	0.50	1.0	1.2	1.75	5.0	SIM ... H4
	MZL 4 R0.75 L15	51	15	0.75	1.5	1.5	1.75	5.0	
5.0	**MZL 5 R0.5 L22**	51	22	0.50	1.0	1.2	2.25	6.0	SIM ... H5
	MZL 5 R0.75 L22	51	22	0.75	1.5	1.5	2.25	6.0	
	MZL 5 R1.0 L22	51	22	1.00	2.0	2.5	2.25	6.0	
6.0	**MZL 6 R0.5 L22**	51	22	0.50	1.0	1.2	2.75	8.0	SIM ... H6
	MZL 6 R0.75 L22	51	22	0.75	1.5	1.5	2.75	8.0	
	MZL 6 R1.0 L22	51	22	1.00	2.0	2.5	2.75	8.0	

Order example: MZL 5 R0.5 L22 BXC

● First choice ○ Alternative

For additional holders see page A06-32 to 41

HK Broaching Tools for Hexagon Keys

Product Identification - Ordering Codes

HK → Hexagon Keys

3 → Min. Bore Dia.
1 = 1.2 - 1.6 mm
2 = 2.2 mm
3 = 2.9 mm
4 = 3.9 mm
5 = 4.9 mm

S30 → Socket Size
S12 = 1.2 - 1.6 mm
S16 = 1.6 - 2.3 mm
S23 = 2.3 - 2.9 mm
S30 = 3.0 - 4.0 mm
S40 = 4.0 - 5.0 mm
S50 = 5.0 - 8.0 mm

L5 → Maximum Cutting depth
L2= 2.3 - 2.5 mm
L4 = 4.0 mm
L5 = 5.5 mm
L6 = 6.5 mm
L9 = 9.5 mm

BMK → Grade

Demonstration

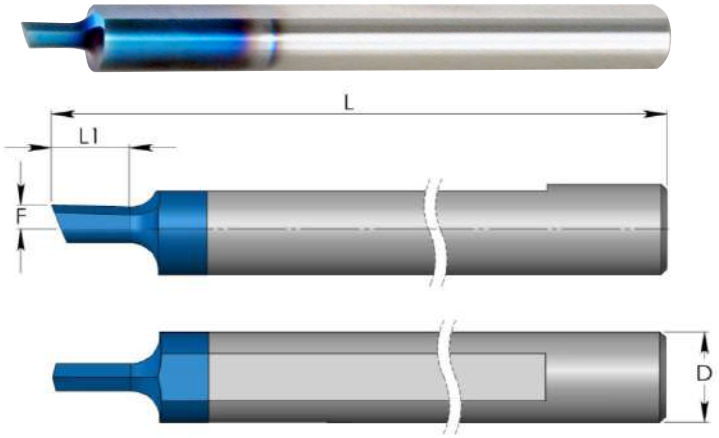

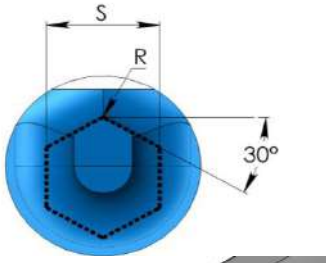



Grade	P	M	K	N	S	H
BMK	●	●	●	●	●	

D	S	Ordering Code	L	L1	R	F	Min. Dia.	Holder
4.0	1.2-1.6	**HK 1 S12 L2**	51	2.3	0.05	0.10	1.2	SIM…H4
	1.6-2.3	**HK 1 S16 L2**	51	2.5	0.05	0.10	1.6	
5.0	2.3-2.9	**HK 2 S23 L4**	51	4.0	0.05	1.35	2.2	SIM…H5
	3.0-4.0	**HK 3 S30 L5**	51	5.5	0.05	1.35	2.9	
	4.0-5.0	**HK 4 S40 L6**	51	6.5	0.10	1.35	3.9	
7.0	5.0-8.0	**HK 5 S50 L9**	62	9.5	0.10	1.35	4.9	SIM…H7

S = Socket Size
Order example: HK 1 S12 L2 BMK

● First choice ○ Alternative

For additional holders see page A06-32 to 41

Tiny Tools Toolholders
Product Identification - Ordering Codes

S	I	M	0020	H3	S
Clamping Method S = Screw	I = Internal	M = Tiny Bars	Shank Cross Section Metric 0012 = 12 mm 0016 = 16 mm 0020 = 20 mm 0022 = 22 mm 0025 = 25 mm	Bar Diameter 3 = 3.0 mm 4 = 4.0 mm 5 = 5.0 mm 6 = 6.0 mm 7 = 7.0 mm 8 = 8.0 mm 10 = 10.0 mm	Swiss Type



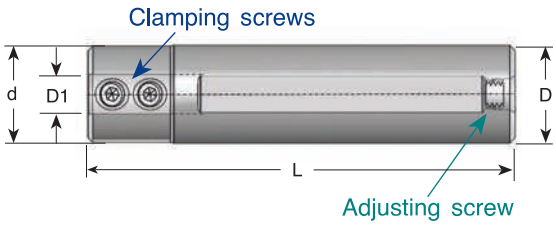



D1	Ordering Code	D	d	L	Key	Clamping Screw	Adjusting Screw
3.0	**SIM 0012 H3**	12	12	88	K16, K25	S24	S35
	SIM 0016 H3S	16	20	75	K25	S25	S35S
	SIM 0016 H3	16	20	88	K25	S25	S35
	SIM 0020 H3	20	20	88	K25	S25	S35
	SIM 0022 H3	22	22	88	K25	S25	S35
	SIM 0022 H3K	22	22	120	K25	S25	S55
	SIM 0025 H3M	25	25	150	K25	S25	-

D1	Ordering Code	D	d	L	Key	Clamping Screw	Adjusting Screw
4.0	SIM 0012 H4	12	12	88	K16, K25	S24	S35
	SIM 0016 H4S	16	20	75	K25	S25	S35S
	SIM 0016 H4	16	20	88	K25	S25	S35
	SIM 0020 H4	20	20	88	K25	S25	S35
	SIM 0022 H4	22	22	88	K25	S25	S35
	SIM 0022 H4K	22	22	120	K25	S25	S55
	SIM 0025 H4M	25	25	150	K25	S25	-
5.0	SIM 0012 H5	12	12	88	K16, K25	S24	S35
	SIM 0016 H5S	16	20	75	K25	S25	S35S
	SIM 0016 H5	16	20	88	K25	S25	S35
	SIM 0020 H5	20	20	88	K25	S25	S35
	SIM 0022 H5	22	22	88	K25	S25	S35
	SIM 0022 H5K	22	22	120	K25	S25	S55
	SIM 0025 H5M	25	25	150	K25	S25	-
6.0	SIM 0012 H6	12	14	88	K16, K25	S24	S35
	SIM 0016 H6S	16	20	75	K25	S25	S35S
	SIM 0016 H6	16	20	88	K25	S25	S35
	SIM 0020 H6	20	20	88	K25	S25	S35
	SIM 0022 H6	22	22	88	K25	S25	S35
	SIM 0022 H6K	22	22	120	K25	S25	S55
	SIM 0025 H6M	25	25	150	K25	S25	-
7.0	SIM 0016 H7	16	20	88	K25	S25	S35
	SIM 0020 H7	20	20	88	K25	S25	S35
	SIM 0022 H7	22	22	88	K25	S25	S35
8.0	SIM 0016 H8	16	20	88	K25	S25	S35
	SIM 0020 H8	20	20	88	K25	S25	S35
	SIM 0022 H8	22	22	88	K25	S25	S35
10.0	SIM 0016 H10	16	20	88	K25	S25S	S35
	SIM 0020 H10	20	20	88	K25	S25S	S35
	SIM 0022 H10	22	22	88	K25	S25	S35



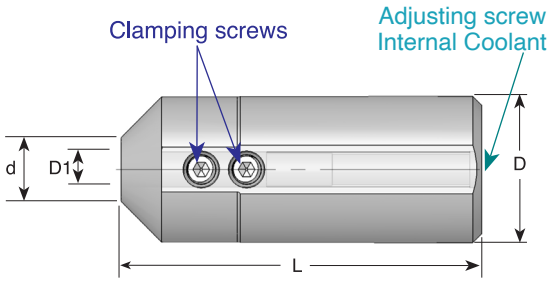

D1	Ordering Code	D	d	L	Key	Clamping Screw	Adjusting Screw
3.0	SIM 0025 H3	25	10.8	62	K25	S25	S35M
4.0	SIM 0025 H4	25	10.8	62	K25	S25	S35M
5.0	SIM 0025 H5	25	10.8	62	K25	S25	S35M
6.0	SIM 0025 H6	25	10.8	62	K25	S25	S35M
7.0	SIM 0025 H7	25	10.8	62	K25	S25	S35M
8.0	SIM 0025 H8	25	10.8	62	K25	S25	S35M

Tiny Tools Toolholders for Star Swiss machines

CPT has developed a unique external turning holder for the sub-spindle on CNC Swiss type lathes.

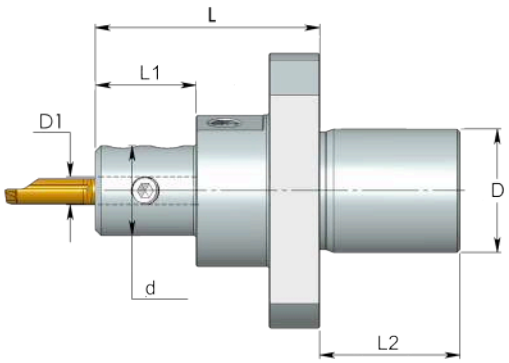

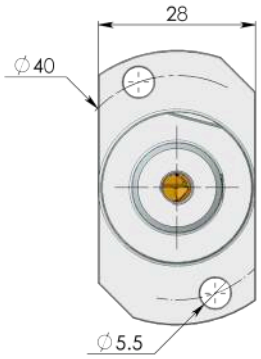



D1	Ordering Code	D	d	L	L1	L2	dp	key	Clamping Screw
3.0	**SIM 22S H3**	22	16	40	18	25	4/6	K16, K25	S24P
3.0	**SIM 22S H3-L**	22	16	50	28	25	4/6	K16, K25	S24P
4.0	**SIM 22S H4**	22	16	40	18	25	4/6	K16, K25	S24P
4.0	**SIM 22S H4-L**	22	16	50	28	25	4/6	K16, K25	S24P
5.0	**SIM 22S H5**	22	16	40	18	25	4/6	K16, K25	S24M
5.0	**SIM 22S H5-L**	22	16	50	28	25	4/6	K16, K25	S24M
6.0	**SIM 22S H6**	22	16	40	18	25	4/6	K16, K25	S24M
6.0	**SIM 22S H6-L**	22	16	50	28	25	4/6	K16, K25	S24M
7.0	**SIM 22S H7**	22	20	40	18	25	4/6	K25	S25
8.0	**SIM 22S H8**	22	20	40	18	25	4/6	K25	S25
8.0	**SIM 22S H8-L**	22	20	50	28	25	4/6	K25	S25
10.0	**SIM 22S H10**	22	20	40	18	25	4/6	K25	S25S
10.0	**SIM 22S H10-L**	22	20	50	28	25	4/6	K25	S25S

The Tiny tool can be gripped in two directions, allows a turning operation on X and Y axis.

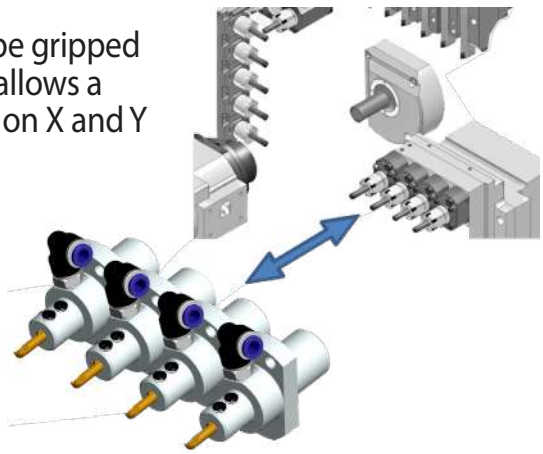

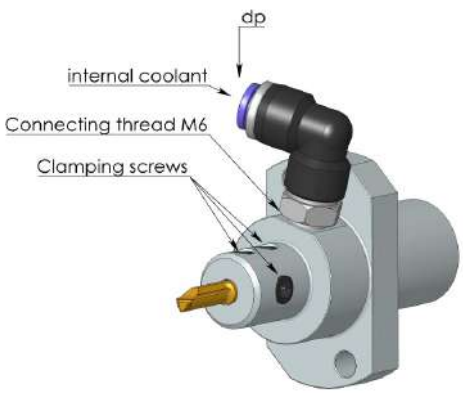

CIM-Fast Clamping System



The new innovative *CIM* clamping system provides high precision and repeatability of the Tiny Tools cutting edge, as well as fast and easy tool exchange without removing the holder.
The *CIM* system includes an internal tool indexing mechanism which index the tool in the correct orientation, as well as strong and rigid collet clamping for high stability.

- No screws required
- Enable fast and accurate exchange of the Tiny Tool inside the machine without removing the *CIM* holder from the machine, or additional tool setup.
- Holders with three clamping flats on the shank for maximum flexibility.
- Fits standard and special CPT Tiny Tools
- Internal coolant through the *CIM* holder and the Tiny Tool pointing to the cutting edge.

Product Identification - Ordering Codes

CIM – *Toolholder*

CIM	0016	H4
Clamping System C = Collet	Shank Cross Section **Metric Version** 16 = Ø16 mm 20 = Ø20 mm **Inch Version** 0625 = Ø.625" 0750 = Ø.75"	Tiny Tools, Bar Diameter 4 = 4.0 mm 5 = 5.0 mm 6 = 6.0 mm

PATENT PENDING

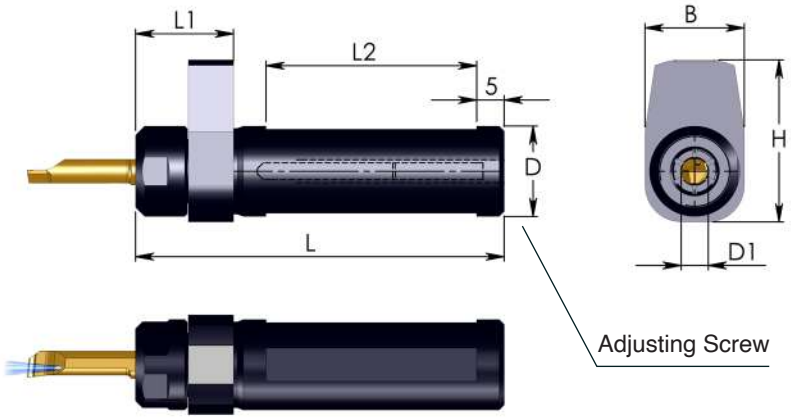



Metric Version

D1	Ordering Code	D	L	L1	L2	B	H
4.0	**CIM 0016 H4**	16	88	22	58	22	36
	CIM 0020 H4	20	88	22	58	22	36
5.0	**CIM 0016 H5**	16	88	22	58	22	36
	CIM 0020 H5	20	88	22	58	22	36
6.0	**CIM 0016 H6**	16	88	22	58	22	36
	CIM 0020 H6	20	88	22	58	22	36

Inch Version

D1 mm	Ordering Code	D"	L"	L1"	L2"	B"	H"
4.0	**CIM 0625 H4**	5/8	3.5	.87	2.3	.87	1.4
	CIM 0750 H4	3/4	3.5	.87	2.3	.87	1.4
5.0	**CIM 0625 H5**	5/8	3.5	.87	2.3	.87	1.4
	CIM 0750 H5	3/4	3.5	.87	2.3	.87	1.4
6.0	**CIM 0625 H6**	5/8	3.5	.87	2.3	.87	1.4
	CIM 0750 H6	3/4	3.5	.87	2.3	.87	1.4

Spare parts

Clamping nut	Wrench key	Adjusting screw	Adjusting screw key	Coolant supply connector
				
CN19	WK19	S35	K25	P-M6-4

* P-M6-6 also available

CIM – *clamping system details*

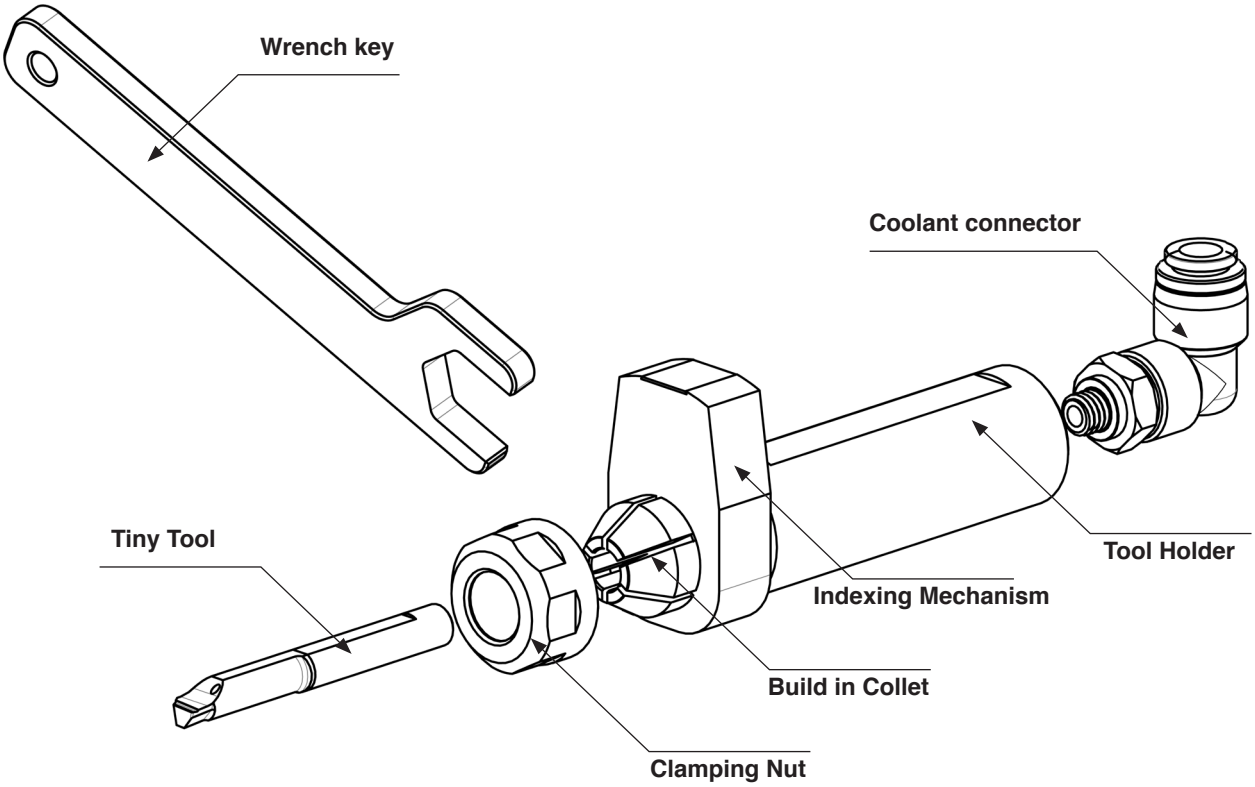

General instructions for use

The CIM toolholder system is designed for a fast and simple way of achieving correct indexing of Tiny Tools inside the machine.

Following is a recommended procedure for the first use:

1. Adjust the rear stopper screw according the tool required over-hang.
   Insert the Tiny Tool into the collet and push it gently until it passes the internal indexing mechanism.
   Adjust the rear stopper screw according the required overhang (do not set the final tool orientation).
   That procedure should be done only once and outside the machine.

2. Remove the Tiny Tool from the CIM toolholder and mount the holder on the machine.
   Clamp it well and it is ready to use. At that point the clamping nut should be screwed on the toolholder collet by hand and remain open.

3. Insert the Tiny Tool into the CIM collet and push it inside gently until you will hear a click.
   Rotate the tool by hand clock wise and counter clock wise until you hear a click and the indexing mechanism set the tool to center.

4. Close the nut by the wrench key.

In that point the tool is ready to use.

For a tool replacement, open the collet with the wrench key, replace the tool, close the collet and continue working.

Tiny Tools Toolholders - Square Shank

for internal machining

Product Identification - Ordering Codes

S	E	M	V	1212	H5
Clamping Method S = Screw	E = External Square Shank	M = Tiny	Vertical	Shank Cross Section 1010 = 10x10 mm 1212 = 12x12 mm	Bar Diameter H3 = 3.0 mm H4 = 4.0 mm H5 = 5.0 mm H6 = 6.0 mm

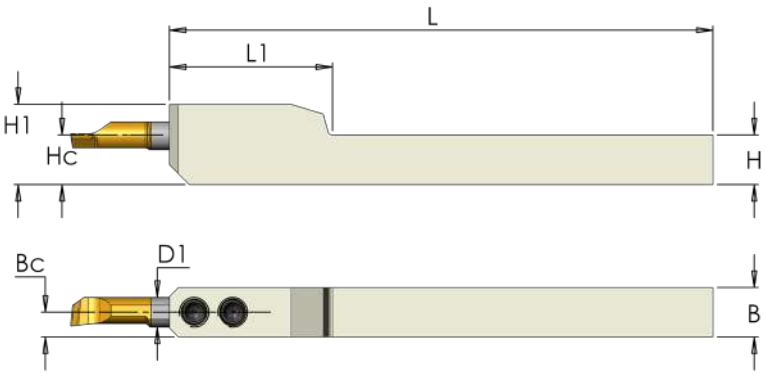



D1	Ordering Code	H	B	L1	L	Hc	Bc	H1	Key	Clamping Screw
3.0	**SEMV 1010 H3**	10	10	24	110	10	5	14.7	K16	S24
	SEMV 1212 H3	12	12	24	110	12	6	16.7	K16	S24
4.0	**SEMV 1010 H4**	10	10	36	110	10	5	15.2	K16	S24
	SEMV 1212 H4	12	12	36	110	12	6	17.2	K16	S24
5.0	**SEMV 1010 H5**	10	10	36	110	10	5	15.7	K16	S24
	SEMV 1212 H5	12	12	36	110	12	6	17.7	K16	S24
6.0	**SEMV 1010 H6**	10	10	33	110	10	5	16.2	K16	S24
	SEMV 1212 H6	12	12	33	110	12	6	18.2	K16	S24

Product Identification - Ordering Codes

S	E	M	R	1616	H5
Clamping Method S = Screw	E = External Square Shank	M = Tiny Bars / Tools	Right Hand	Shank Cross Section 1212 = 12x12 mm 1616 = 16x16 mm	Bar Diameter 3 = 3.0 mm 4 = 4.0 mm 5 = 5.0 mm 6 = 6.0 mm

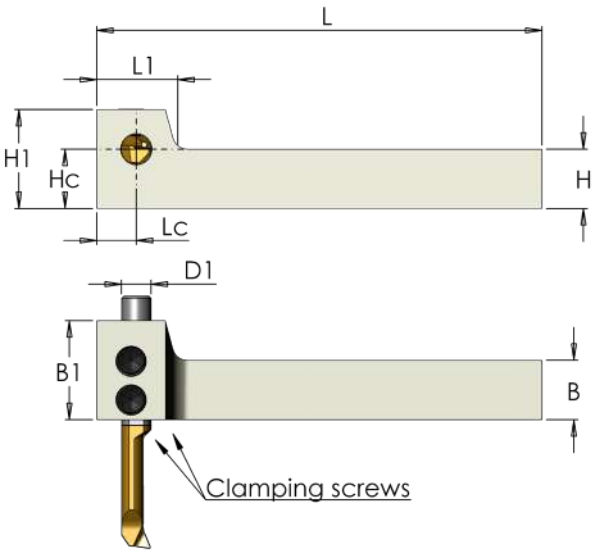

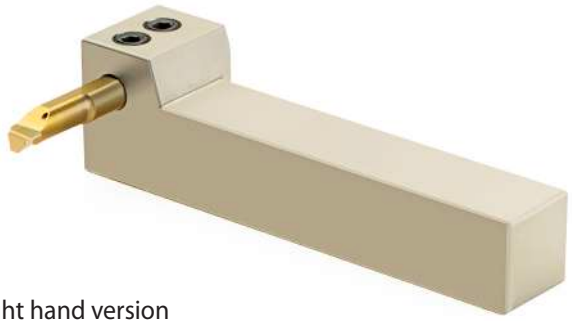

Right hand version

D1	Ordering Code	H	B	B1	L	L1	Hc	Lc	H1	Key	Clamping Screw
3.0	**SEM R 1212 H3**	12	12	20	88	16	12	7	20	K25	S25
	SEM R 1616 H3	16	16	24	120	16	16	7	24	K25	S25
4.0	**SEM R 1212 H4**	12	12	20	88	16	12	7	20	K25	S25
	SEM R 1616 H4	16	16	24	120	16	16	7	24	K25	S25
5.0	**SEM R 1212 H5**	12	12	20	88	16	12	7	20	K25	S25
	SEM R 1616 H5	16	16	24	120	16	16	7	24	K25	S25
6.0	**SEM R 1212 H6**	12	12	20	88	16	12	7	20	K25	S25S
	SEM R 1616 H6	16	16	24	120	16	16	7	24	K25	S25S

Product Identification - Ordering Codes

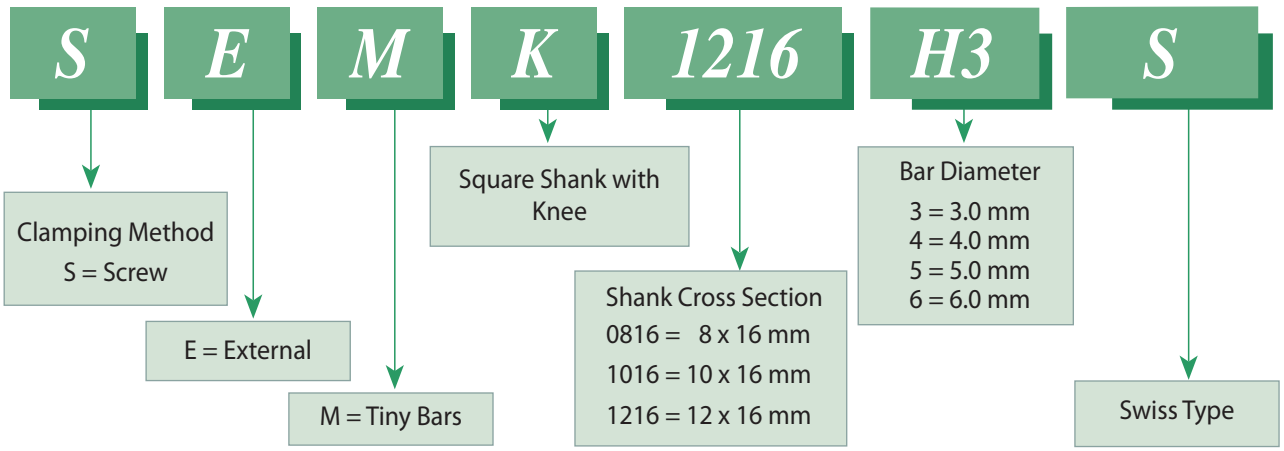



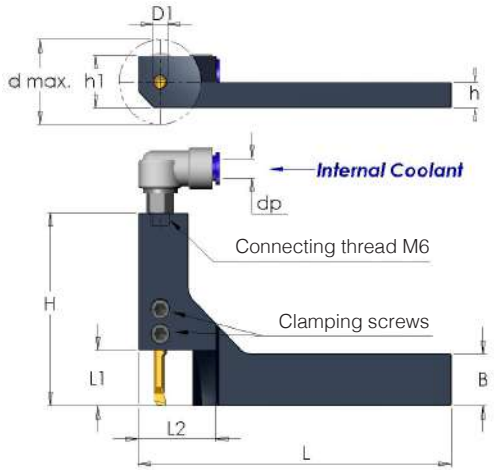

D1	Ordering Code	B	L	L1	L2	H	h	h1	d max.	*dp	Key	Clamping Screw
3.0	**SEMK 0816 H3S**	16	100	17	25	46	8	16	26	4/6	K25	S25
	SEMK 1016 H3S	16	100	17	25	46	10	18	26	4/6	K25	
	SEMK 1216 H3S	16	100	17	25	46	12	20	26	4/6	K25	
4.0	**SEMK 0816 H4S**	16	100	17	25	58	8	16	26	4/6	K25	S25
	SEMK 1016 H4S	16	100	17	25	58	10	18	26	4/6	K25	
	SEMK 1216 H4S	16	100	17	25	58	12	20	26	4/6	K25	
5.0	**SEMK 0816 H5S**	16	100	17	25	58	8	16	26	4/6	K25	S25
	SEMK 1016 H5S	16	100	17	25	58	10	18	26	4/6	K25	
	SEMK 1216 H5S	16	100	17	25	58	12	20	26	4/6	K25	
6.0	**SEMK 0816 H6S**	16	100	17	25	58	8	16	26	4/6	K25	S25
	SEMK 1016 H6S	16	100	17	25	58	10	18	26	4/6	K25	
	SEMK 1216 H6S	16	100	17	25	58	12	20	26	4/6	K25	

* Optional

Tiny Tools Kits

Boring

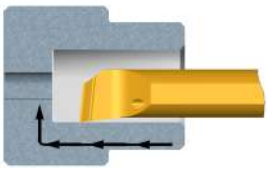

Profiling & Boring

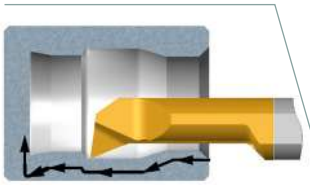

Threading

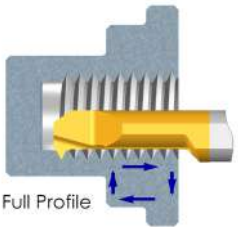

Chamfering & Boring

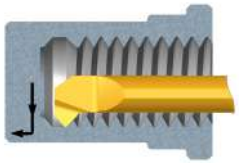

Grooving

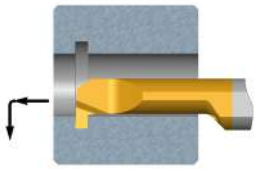

Face Grooving

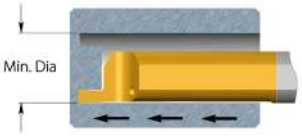



KT4-20	*KT5-20*	
MTR 4 R0.2 L10	MTR 5 R0.2 L15	Boring
MPR 4 R0.2 L10	MPR 5 R0.2 L15	Profiling
MIR 4 L15 A60	MIR 5 L15 A60	Threading
MCR 4 R0.2 L15	MCR 5 R0.2 L15	Chamfering
MGR4 B1.5 L10	MGR 5 B1.5 L15	Grooving
MFR 4 B1.0 L15	MFR 5 B1.0 L22	Face Grooving
SIM 0020 H4	SIM 0020 H5	Holder
K25	K25	Key

Order example: KT4-20

Also available are kits with a
16 mm or 22 mm shank diameter bar holder.
Order example: KT4-16

Technical Section

Carbide Grades:

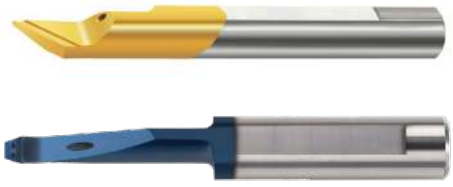

BXC (P30 - P50, K25 - K40)
PVD TiN coated grade for low cutting speed.
Works well with a wide range of stainless steels.

BMK (K10 - K20)
Sub-micron grade with advanced PVD triple coating. Extremely high heat resistant and smooth cutting operation, for high performance, and normal machining conditions. General purpose for all materials.



K20 (K10 - K30)
Uncoated Carbide grade for non ferrous metals, aluminum and cast iron.

TNX
New advanced carbide grade TN***X*** for higher feeds and high performance, at medium to high cutting speed. Extra fine grain size with high hardness and toughness combined with triple layer reddish coating, provides high edge stability and better chip flow. Available only for CBR bars.

Cutting speed for Tiny Tools

ISO Stan-dard	Material		Condition	Cutting Speed m/min			
				BXC	BMK	K20	TN***X***
P	Non-Alloy steel and cast steel, free cutting steel	<%0.25C	Annealed	25 - 70	30 - 80		36 - 80
		≥%0.25C	Annealed				
		< %0.55C	Quenched and tempered				
		≥%0.55C	Annealed				
		≥%0.55C	Quenched and tempered				
	Low alloy steel and cast steel (less than %5 alloying elements)		Annealed	20 - 40	25 - 50		30 - 50
			Quenched and tempered				
	High alloy steel, cast steel, and tool steel		Annealed	20 - 40	25 - 50		30 - 50
			Quenched and tempered				
M	Stainless steel and cast steel		Ferritic/martensitic	25 - 40	30 - 60		36 - 60
			Martensitic				
			Austenitic				
K	Cast iron nodular (GGG)		Ferritic/pearlitic	25 - 60	30 - 80		36 - 80
			Pearlitic				
	Grey cast iron (GG)		Ferritic	30 - 70	30 - 80		36 - 80
			Pearlitic				
	Malleable cast iron		Ferritic	20 - 40	20 - 50		24 - 50
			Pearlitic				
N	Aluminum-wrought alloy		Not cureable	50 - 100	60 - 120	30 - 50	72 - 120
			Cured				
	Aluminum- cast, alloyed	≤%12 Si	Not cureable	40 - 80	50 - 90	20 - 40	60 - 90
			Cured				
		>%12 Si	High temperature				
	Copper alloys	>%1 Pb	Free cutting	30 - 60	30 - 70	20 - 40	36 - 70
			Brass				
			Electrolytic copper				
	Non metalic		Duroplastics, fiber plastics	40 - 80		20 - 40	
			Hard rubber				
S	High temp. alloys, Super alloys	Fe based	Annealed	15 - 30	15 - 40		18 - 40
			Cured				
		Ni or Co based	Annealed				
			Cured				
			Cast				
	Titanium, Titanium alloys		Alpha+beta alloys cured	10 - 30	10 - 30		12 - 30
H	Hardened steel		Hardened 45-50 HRc	10 - 30	14 - 40		18 - 40
			Hardened 51-55 HRc				
			Hardened 56-62 HRc				
	Chilled cast iron		Cast	10 - 30	10 - 30		12 - 30
	Cast iron		Hardened	10 - 20	10 - 20		12 - 20

Recommended Feed Rate: 0.01 - 0.03 mm/rev

For CMR Tiny Tools see page A06-45

Threading Passes

Pitch:	mm TPI	0.5 48	0.7 36	0.8 32	1.0 24	1.25 20	1.5 16	2-5 14-5
Number of Passes		6 - 12	7 - 14	7 - 16	8 - 18	8 - 20	10 - 22	20 - 38

CMR CPT Multi-Task Tiny Tools

- CPT is introducing a new and innovative Multi-Task Tiny Tool **CMR** for Boring, Turning, Facing and Chamfering with a single tool.
- The unique design enables machining of the material without the need for a pilot hole.
- The new tool shortens the machining cycle time and the number of tools required - providing **High Productivity**.
- Effective through coolant hole with a spiral flute, evacuates the chips out of the hole uninterruptedly.
- Unique chip breaker and flute design.
- To use with standard SIM toolholders on Swiss Type or CNC lathe machines.
- Available in **BMK** Grade only.

Working Method

- The tool penetrates the work piece and produces the hole compliant with the minimum diameter the tool allows.
- The tool can penetrate the material in one pass or several passes depending on the work piece material, coolant pressure, machine power etc.
- The hole can be enlarged by multi radial passes.

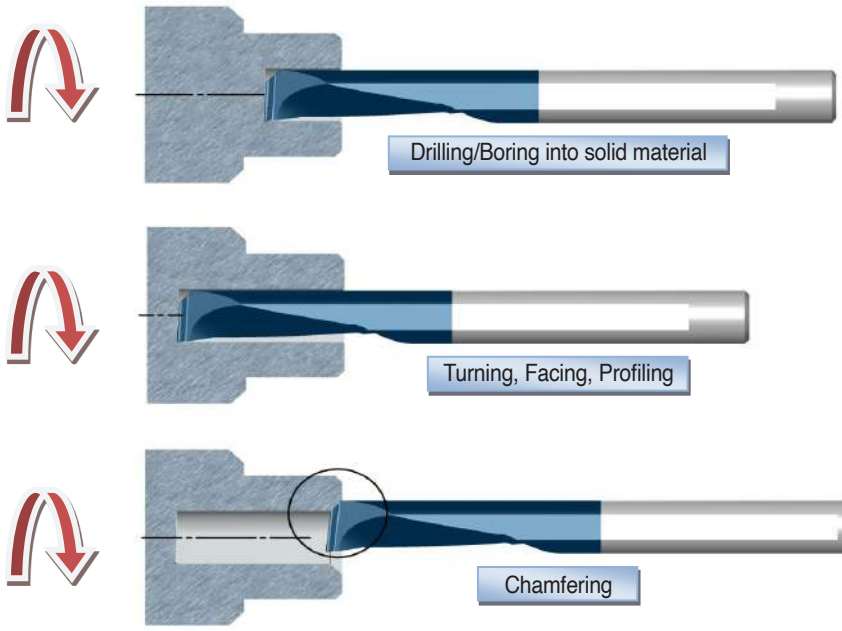

Rear view of the cutting chamfer



The tool is equipped with an additional cutting edge, which is located across the main front edge. This allows production of an additional 45° chamfer on the work piece without the need to stop the spindle or processing operation.

CMR General Recommendations

Coolant fluid

Dry machining should not be performed under any circumstances.
It is necessary to use an internal coolant in all applications.
Oil or Emulsion lubricants are recommended for best performance.
In the event of low coolant pressure, adding an external coolant can improve the tool operation.

The cooling stream is designed to provide three benefits:
1. Cooling the cutting edge of the tool, and the contact area.
2. Pushing the chip away from the tool quickly, thereby reducing wear of the edge.
3. Helping to break the chip into smaller pieces and evacuating them from the cutting area.

Cutting Data

ISO Standard	Material	Cutting Speed m/min
P	Low and Medium Carbon Steels <0.55%C	20 - 75
	High Carbon Steels ≥0.55%C	20 - 75
	Alloy Steels, Treated Steels	20 - 60
M	Stainless Steels - Free Cutting	20 - 60
	Stainless Steels - Austenitic	20 - 50
	Cast Steels	20 - 70
K	Cast Iron	20 - 90
N	Aluminum ≤12%Si, Copper	40 - 150
	Aluminum >12% Si	20 - 100
	Synthetics, Duroplastics, Thermoplastics	40 - 150
S	Nickel Alloys, Titanium Alloys	15 - 60
H	Hardened Steels	60 - 70

Recommended Feed Rate: 0.01 - 0.03 mm/rev

HK Broaching Tools for Hexagon Keys

The HK broaching system have been developed to machine internal keyways inside blind or through holes, using CNC machines.

- To use with CPT standard SIM Bar Holders
- The holder can be located directly in the turret or the machine spindle
- Holder with rear clamping screw for full support during operation
- Available in **BMK** Grade only.

Working Demo

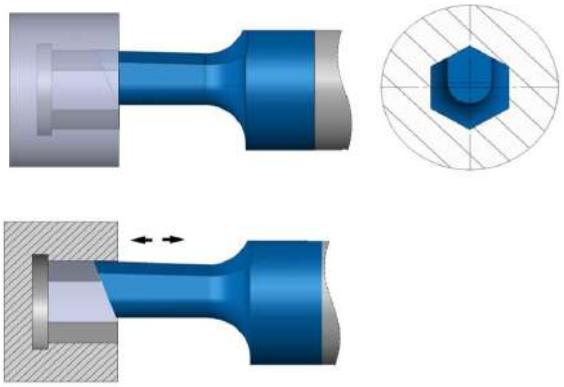

Cutting Data

Material Tensile Strength (N/mm²)	Feed rate (mm/min)	In-feed per stroke (mm)
400-650	7000-9000	0.06-0.09
700-850	5000-6500	0.04-0.07
900-1000	4000-5500	0.03-0.05
1100-1200	3000-4500	0.02-0.04

The cutting data above is an initial recommendation and depends on the machine condition, workpiece profile and the application clamping

- A relief groove is highly recommended, if not possible a gradual volume decrease should be made at the end of the broaching groove
- The HK tool must be positioned outside of the hole/groove before each stroke
- After setup and first stroke, we recommend to observe the tool and the application to make sure no collision occurred

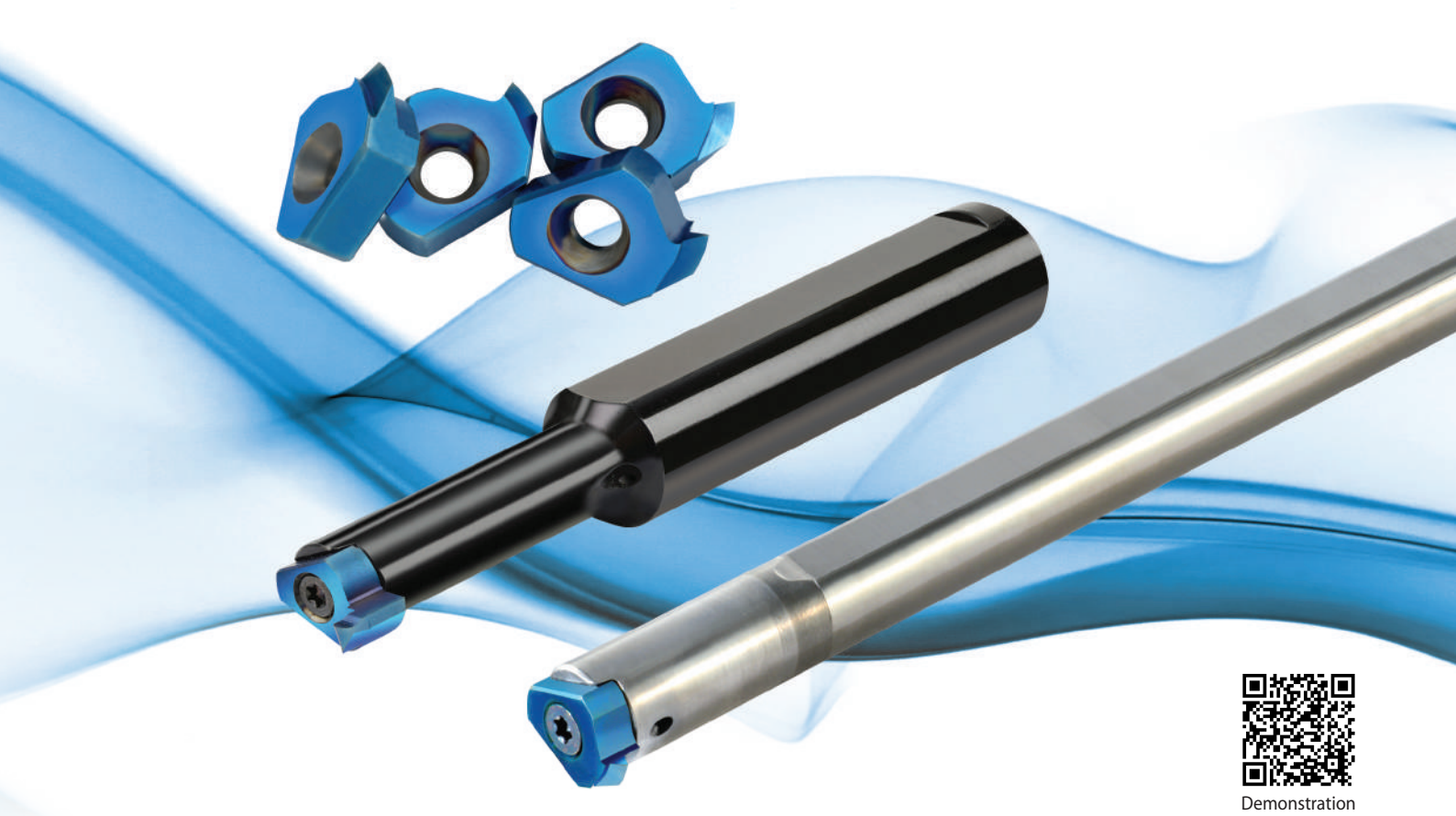

Demonstration

Vertical Inserts and Toolholders for threading, chamfering, grooving and turning

Advantages

Carbide grade: BLU-Sub-Micron grade with advanced PVD triple layer coating delivering high heat resistance and smooth cutting operation.

- Carbide shank toolholder provides excellent vibration resistance.
- Long reach.
- Through coolant.
- For threading, grooving, boring and chamfering.
- Quick indexing.

Typical Applications:

- Long threads or applications requiring over-hang.
- Enables production of threads with large pitch/profile.
- Threading, grooving, boring, profiling and chamfering - It's possible to offer most of the Tiny Tools profiles on the insert.

Contents:	Page:	Contents:	Page:
Product Identification	2	Full Radius Grooving	8
Partial Profile 60°	3	Back Turning	9
Partial Profile 55°	3	Boring and Profiling	9
Full Profile - ISO	4	Boring, Profiling and Facing	10
Full Profile - UN	4	Face grooving	11
Acme	5	Face grooving, Full radius	12
Trapez - DIN 103	5	Carbide Shank Toolholders	13
Chamfering	6	Steel Toolholders	14
Grooving	7	Technical Section	14
Grooving, Circlip Ring Grooves DIN 471/472	8		

Product Identification - Ordering Codes

Inserts

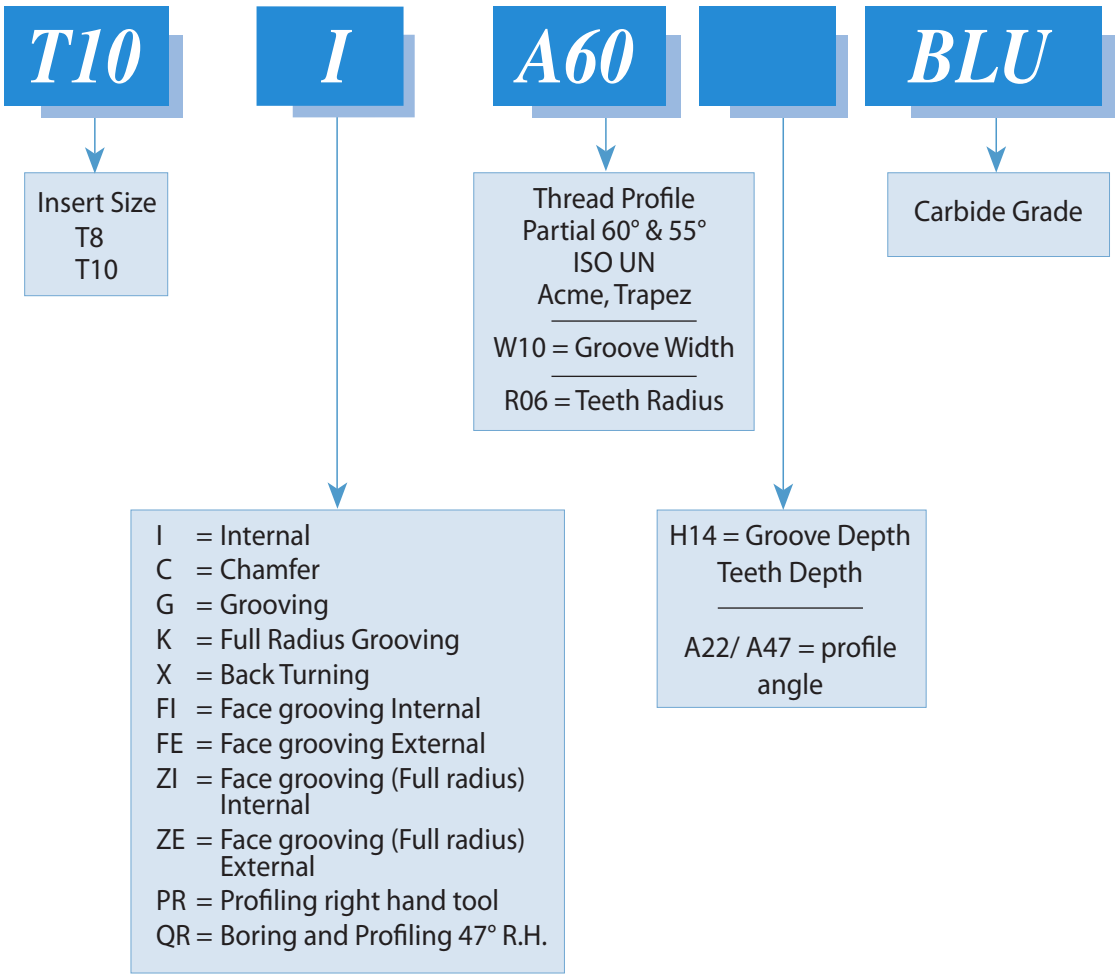

Toolholders

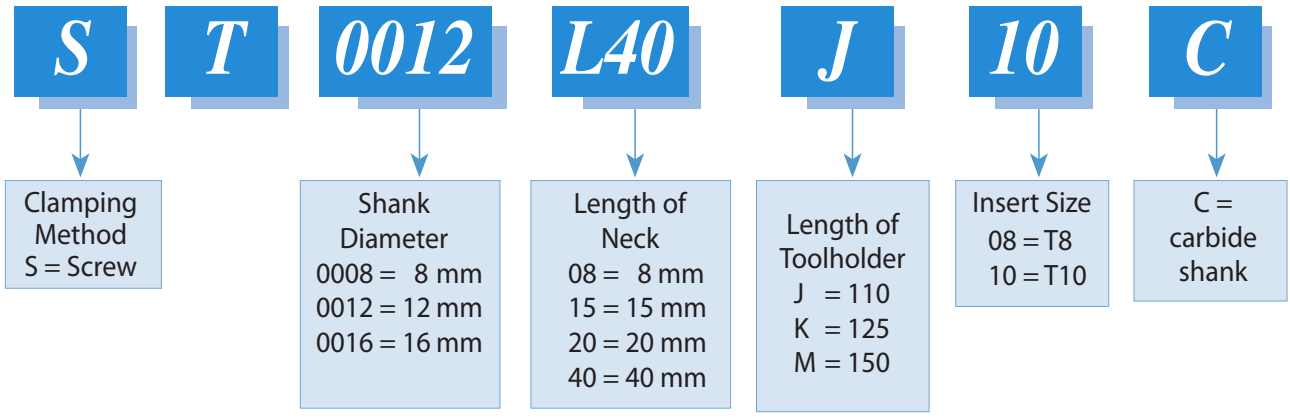

Partial Profile 60°

Same insert for internal and external thread

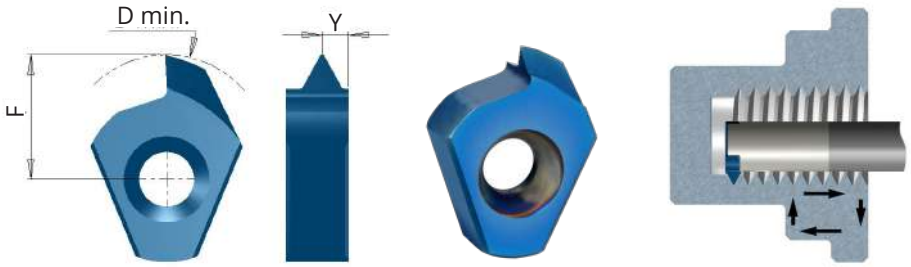

Insert Type	Ordering Code	Pitch Range mm	Pitch Range TPI	D min	F	Y
T8	**T8 A60**	Int 0.5-0.75 Ex 0.4- 0.75	56-32 64-32	8.0	3.7	0.6
	T8 G60	Int 1.0-1.25 Ex 0.8- 1.0	28-20 32-28	8.4	4.1	0.8
T10	**T10 A60**	Int 0.5-0.8 Ex 0.4-0.8	56-28 64-32	11.6	6.4	0.6
	T10 G60	Int 1.0-2.0 Ex 0.8-1.75	28-13 32-15	12.3	7.1	1.3
	T10 D60	Int 2.0-3.0 Ex 1.75-2.5	13-8 15-10	13.1	7.9	1.5

Order example: T8 G60 BLU

Partial Profile 55°

Same insert for internal and external thread

Insert Type	Ordering Code	Pitch Range mm	Pitch Range TPI	D min	F	Y
T8	**T8 G55**	1.25-1.5	19-18	9.1	4.8	1.0
	T8 U55	1.75-2.0	16-14	8.7	4.4	1.2
T10	**T10 G55**	1.25-2.0	19-14	12.4	7.2	1.2

Full Profile

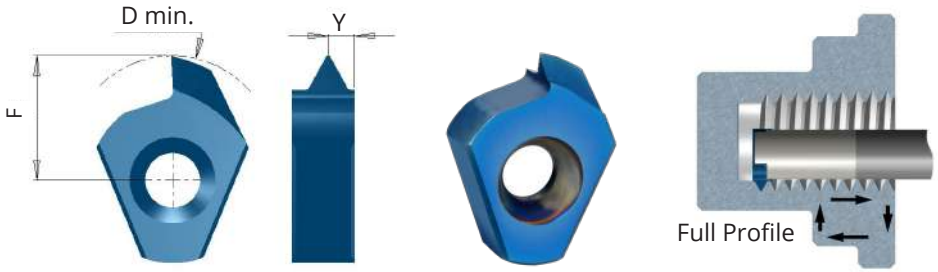

ISO

Inserts for internal thread

Insert Type	Ordering Code	Pitch mm	M coarse	M fine	D min	F	Y
T8	**T8 I 0.5 ISO**	0.5		M8.5	8.0	3.6	0.5
	T8 I 0.75 ISO	0.75		M9	8.1	3.8	0.6
	T8 I 1.0 ISO	1.0		M9	8.0	3.7	0.7
	T8 I 1.25 ISO	1.25		M10	8.2	3.9	0.8
	T8 I 1.5 ISO	1.5	M10	M12	8.4	4.1	1.0
	T8 I 1.75 ISO	1.75	M12	-	8.6	4.3	1.1
	T8 I 2.0 ISO	2.0	M14	M17	8.8	4.5	1.3
T10	**T10 I 0.5 ISO**	0.5		M12	11.3	6.1	0.5
	T10 I 0.75 ISO	0.75		M12	11.3	6.1	0.6
	T10 I 1.0 ISO	1.0		M13	11.7	6.5	0.7
	T10 I 1.5 ISO	1.5		M14	11.7	6.5	1.0
	T10 I 2.0 ISO	2.0	M16	M17	12.0	6.8	1.3
	T10 I 2.5 ISO	2.5	M18, M20	-	12.6	7.4	1.4
	T10 I 3.0 ISO	3.0	M24	M28	12.6	7.4	1.6

Order example: T10 I 0.5 ISO BLU

UN

Inserts for internal thread

Insert Type	Ordering Code	Pitch TPI	Nominal size	UNC	UNF	UNEF	D min	F	Y
T8	**T8 I 32UN**	32	7/16, 1/2			3/8	8.3	4.0	0.6
	T8 I 28UN	28	3/8			7/16, 1/2	8.3	4.0	0.7
	T8 I 24UN	24			3/8		8.3	4.0	0.7
	T8 I 20UN	20	3/8		7/16, 1/2		8.2	3.9	0.9
	T8 I 16UN	16	7/16, 1/2				8.7	4.4	1.0
	T8 I 14UN	14		7/16			8.8	4.5	1.2
	T8 I 13UN	13		1/2			8.8	4.5	1.3
T10	**T10 I 20UN**	20	9/16, 5/8, 11/16			3/4	12.0	6.8	0.9
	T10 I 18UN	18			9/16, 5/8		12.0	6.8	1.0
	T10 I 16UN	16	9/16, 5/8, 11/16		3/4		12.0	6.8	1.1
	T10 I 14UN	14			7/8		12.1	6.9	1.2
	T10 I 12UN	12	5/8, 11/16, 3/4	9/16			12.1	6.9	1.4
	T10 I 11UN	11		5/8			12.5	7.3	1.5
	T10 I 10UN	10		3/4			12.6	7.4	1.5

Acme

Inserts for internal thread

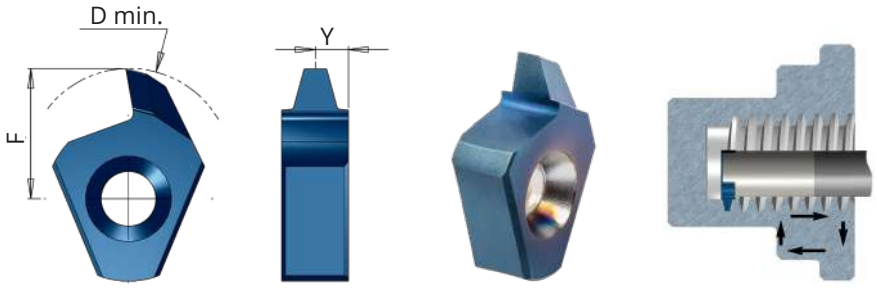

Insert Type	Ordering Code	Pitch TPI	Thread size	D min	F	Y
T8	**T8 I 10 ACME**	10	1/2-10	10.1	5.5	1.3
T10	**T10 I 8 ACME**	8	5/8-8	12.7	7.3	1.6
	T10 I 6 ACME	6	3/4-6	14.8	7.9	2.0

Order example: T10 I 6 ACME BLU

Trapez - DIN103

Inserts for internal thread

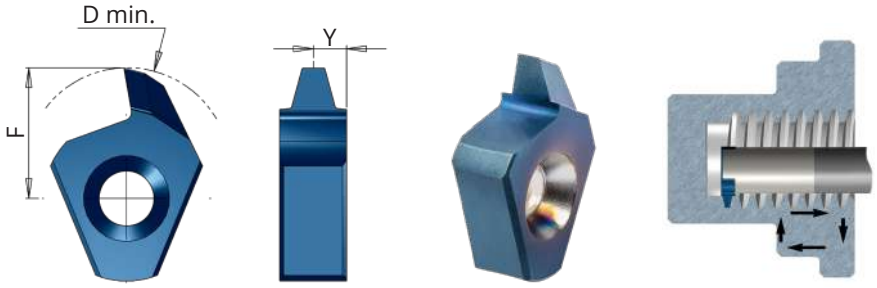

Insert Type	Ordering Code	Pitch mm	Thread size	D min	F	Y
T8	**T8 I 2 TR**	2	Tr12x2, Tr14x2	10.0	4.8	1.0
	T8 I 3 TR	3	Tr14x3	11.0	5.8	1.5
T10	**T10 I 2 TR**	2	Tr16x2, Tr18x2, Tr20x2	14.0	7.0	1.0
	T10 I 3 TR	3	Tr22x3	19.0	7.9	1.5
	***T10 I 4 TR**	4	Tr16x4, Tr18x4	12.0	6.7	2.0

*To use with T10 toolholders version B

Chamfering

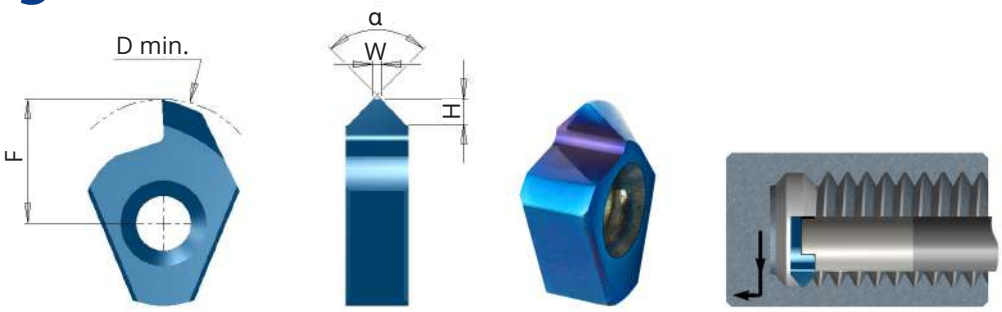

Insert Type	Ordering Code	W	H max	α	D min	F
T8	**T8 C90**	0.2	1.4	90°	8.8	4.5
T10	**T10 C90**	0.2	1.8	90°	12.7	7.5

Same insert for right and left hand chamfers

Order example: T8 C90 BLU

Grooving

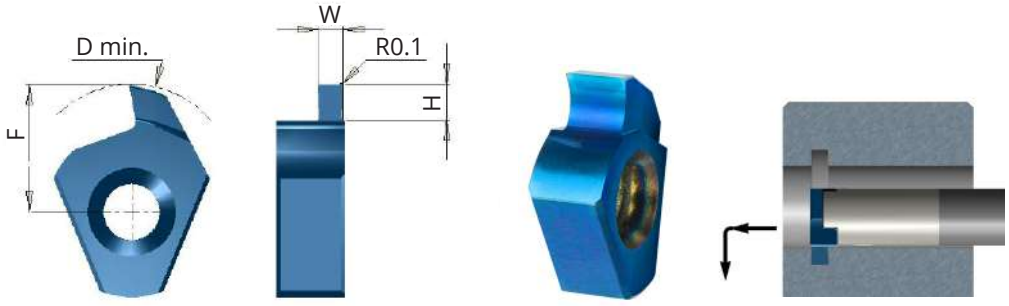

Insert Type	Ordering Code	W mm	W inch	R	H max	D min	F
T8	**T8 G W08 H20**	0.79	.031	0.1	2.0	9.4	5.1
	T8 G W10 H20	1.0	.039	0.1	2.0	9.4	5.1
	T8 G W12 H20	1.19	.047	0.1	2.0	9.4	5.1
	T8 G W15 H20	1.5	.059	0.1	2.0	9.4	5.1
	T8 G W16 H20	1.59	.063	0.1	2.0	9.4	5.1
	T8 G W20 H20	2.0	.079	0.1	2.0	9.4	5.1
	T8 G W24 H20	2.38	.094	0.1	2.0	9.4	5.1
	T8 G W25 H20	2.5	.098	0.1	2.0	9.4	5.1
	T8 G W30 H20	3.0	.118	0.1	2.0	9.4	5.1
T10	**T10 G W08 H28**	0.79	.031	0.1	2.8	13.4	7.9
	T10 G W10 H14	1.0	.039	0.1	1.4	12.3	7.1
	T10 G W10 H23	1.0	.039	0.1	2.3	13.1	7.9
	T10 G W12 H28	1.19	.047	0.1	2.8	13.4	7.9
	T10 G W15 H14	1.5	.059	0.1	1.4	12.3	7.1
	T10 G W15 H23	1.5	.059	0.1	2.3	13.1	7.9
	***T10 G W15 H40**	1.5	.059	0.1	4.0	13.5	7.9
	T10 G W16 H28	1.59	.063	0.1	2.8	13.4	7.9
	T10 G W20 H14	2.0	.079	0.1	1.4	12.3	7.1
	T10 G W20 H23	2.0	.079	0.1	2.3	13.1	7.9
	***T10 G W20 H40**	2.0	.079	0.1	4.0	13.5	7.9
	T10 G W24 H28	2.38	.094	0.1	2.8	13.4	7.9
	T10 G W25 H23	2.5	.098	0.1	2.3	13.1	7.9
	***T10 G W25 H40**	2.5	.098	0.1	4.0	13.5	7.9
	T10 G W30 H23	3.0	.118	0.1	2.3	13.1	7.9
	***T10 G W30 H40**	3.0	.118	0.1	4.0	13.5	7.9

*To use with T10 toolholders version B

Tolerance: W±0.02 mm/.001"

Order example: T10 G W08 H28 BLU

Grooving, Circlip Ring Grooves DIN 471/472

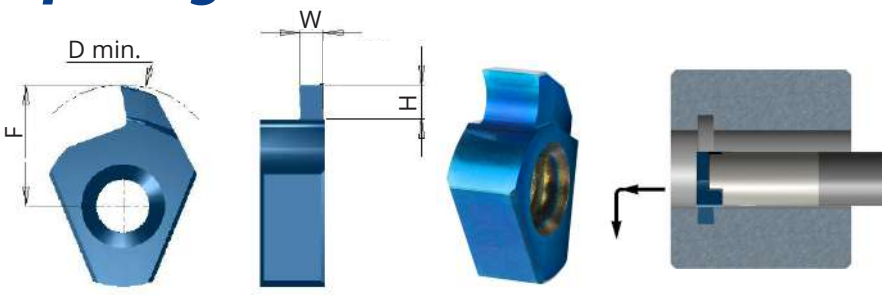

Insert Type	Ordering Code	Nom` groove width	W +0.03	R	H max	D min	F
T8	**TD8 G W07 H12**	0.7	0.73	0	1.2	8.8	4.3
	TD8 G W08 H13	0.8	0.83	0	1.3	8.9	4.4
	TD8 G W09 H18	0.9	0.93	0	1.8	9.4	4.9
	TD8 G W12 H18	1.1	1.20	0	1.8	9.4	4.9
	TD8 G W14 H18	1.3	1.40	0	1.8	9.4	4.9
	TD8 G W17 H18	1.6	1.70	0	1.8	9.4	4.9
T10	**TD10 G W07 H12**	0.7	0.73	0	1.2	11.9	6.4
	TD10 G W08 H13	0.8	0.83	0	1.3	12.0	6.5
	TD10 G W09 H15	0.9	0.93	0	1.5	12.2	6.7
	TD10 G W12 H28	1.1	1.20	0	2.8	13.4	7.9
	TD10 G W14 H28	1.3	1.40	0	2.8	13.4	7.9
	TD10 G W17 H28	1.6	1.70	0	2.8	13.4	7.9

Order example: TD10 G W17 H28 BLU

Full Radius Grooving

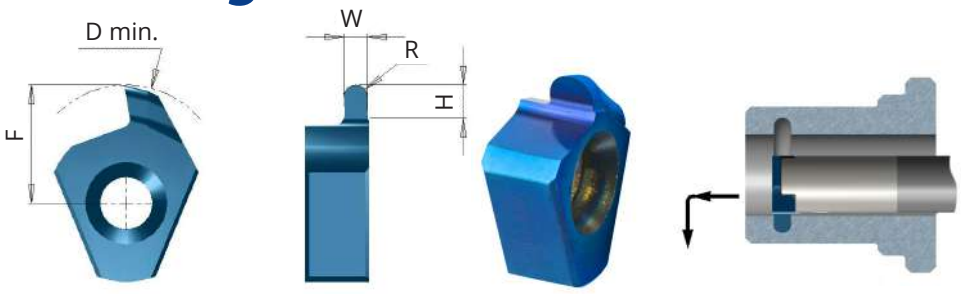

Insert Type	Ordering Code	W ± 0.02	R	H max	D min	F
T8	**T8 K R04 H10**	0.8	0.4	1.0	8.4	4.1
	T8 K R06 H10	1.2	0.6	1.0	8.4	4.1
	T8 K R09 H10	1.8	0.9	1.0	8.4	4.1
T10	**T10 K R04 H22**	0.8	0.4	2.2	13.1	7.9
	***T10 K R04 H40**	0.8	0.4	4.0	13.5	7.9
	T10 K R06 H22	1.2	0.6	2.2	13.1	7.9
	***T10 K R06 H40**	1.2	0.6	4.0	13.5	7.9
	T10 K R09 H22	1.8	0.9	2.2	13.1	7.9
	***T10 K R09 H40**	1.8	0.9	4.0	13.5	7.9
	T10 K R10 H22	2.0	1.0	2.2	13.1	7.9
	***T10 K R10 H40**	2.0	1.0	4.0	13.5	7.9

*To use with T10 toolholders version B

Back Turning

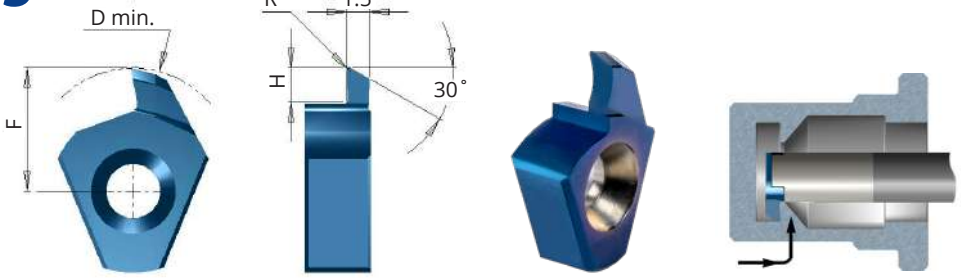

Insert Type	Ordering Code	R	H max	D min	F
T8	**T8 X R02 H20**	0.2	2.0	9.4	5.1
T10	**T10 X R02 H23**	0.2	2.3	13.1	7.9
	***T10 X R02 H35**	0.2	3.5	13.5	7.9
	T10 X R04 H23	0.4	2.3	13.1	7.9

*To use with T10 toolholders version B

Boring and Profiling

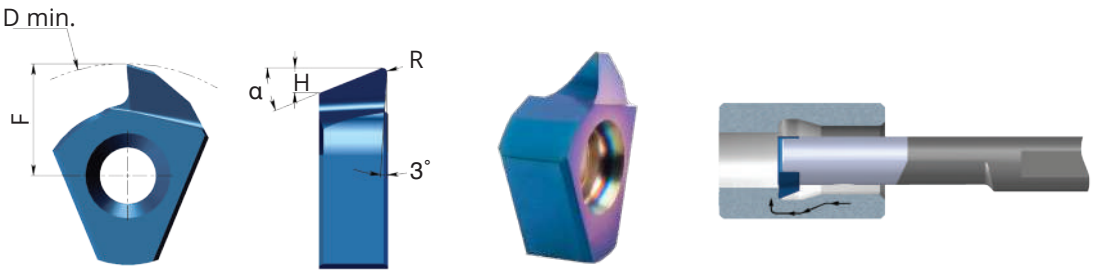

Insert Type	Ordering Code	α	R	H	D min	F
T8	**T8 PR R01 A22**	22°	0.1	1.0	9.2	5.0
	T8 PR R02 A22	22°	0.2	1.0	9.2	5.0
	T8 QR R01 A47	47°	0.1	1.9	9.2	5.0
	T8 QR R02 A47	47°	0.2	1.9	9.2	5.0

Order example: T8 PR R01 A22 BLU

Boring, Profiling and Facing

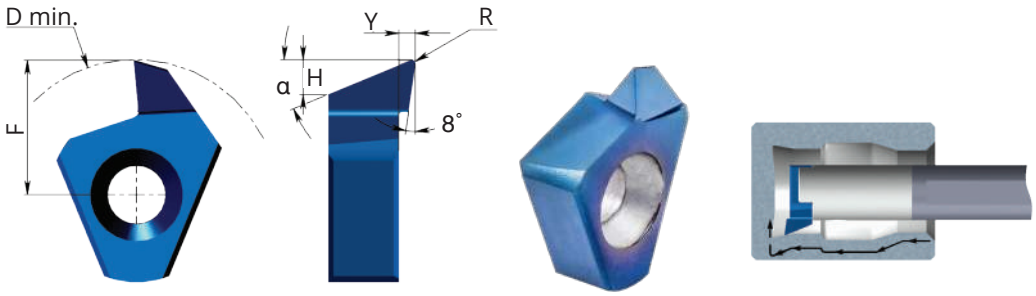

Insert Type	Ordering Code	α	β	R	H	Y	D min	F
T10	**T10 PR R01 A22**	22°	8°	0.1	1.9	0.9	12.9	7.7
	T10 PR R02 A22	22°	8°	0.2	1.9	0.9	12.9	7.7
	T10 QR R01 A47	47°	3°	0.1	2.6	0.4	12.9	7.7
	T10 QR R02 A47	47°	3°	0.2	2.6	0.4	12.9	7.7

Order example: T10 PR R01 A22 BLU

Face grooving

Internal

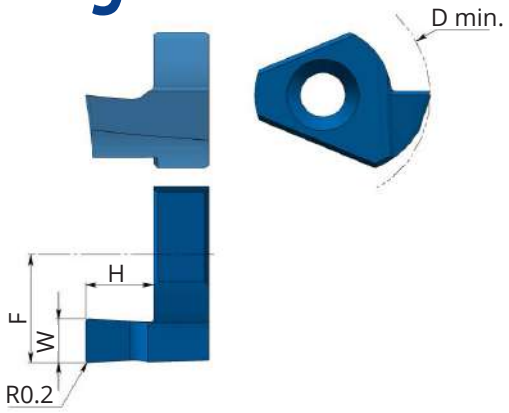

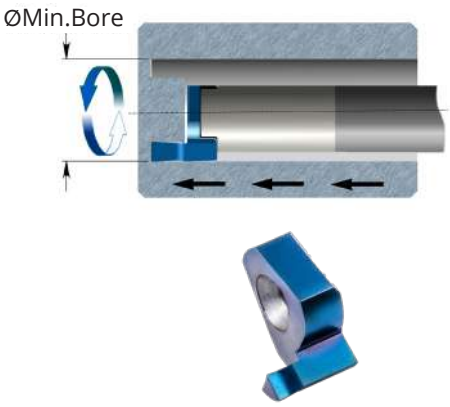

Insert Type	Ordering Code	W ±0.02	H max	D min	F
T10	**T10 FI W10 H15**	1.0	1.5	14.0	8.0
	T10 FI W15 H25	1.5	2.5		
	T10 FI W20 H30	2.0	3.0		
	T10 FI W20 H50	2.0	5.0		
	T10 FI W25 H30	2.5	3.0		
	T10 FI W25 H50	2.5	5.0		
	T10 FI W30 H30	3.0	3.0		
	T10 FI W30 H50	3.0	5.0		

Order example: T10 FI W30 H50 BLU

External

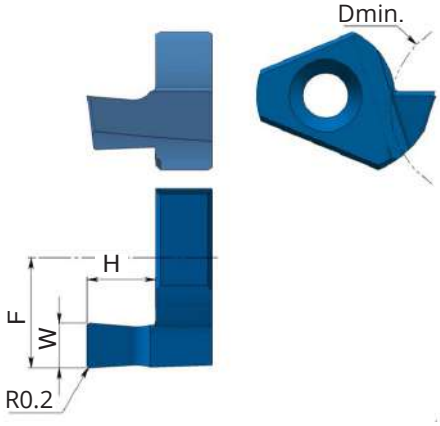

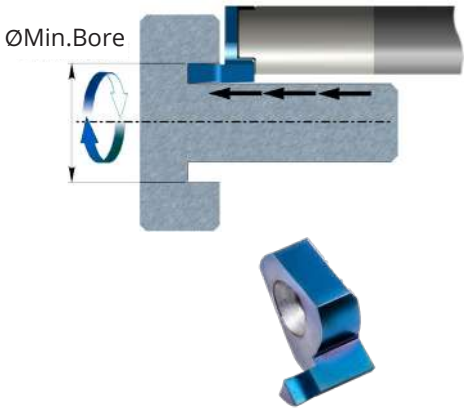

Insert Type	Ordering Code	W ±0.02	H max	D min	F
T10	**T10 FE W10 H15**	1.0	1.5	12.0	8.0
	T10 FE W15 H25	1.5	2.5		
	T10 FE W20 H30	2.0	3.0		
	T10 FE W20 H50	2.0	5.0		
	T10 FE W25 H30	2.5	3.0		
	T10 FE W25 H50	2.5	5.0		
	T10 FE W30 H30	3.0	3.0		
	T10 FE W30 H50	3.0	5.0		

Face grooving, Full radius

Internal

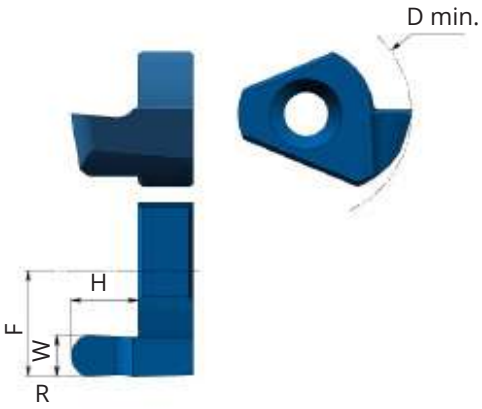

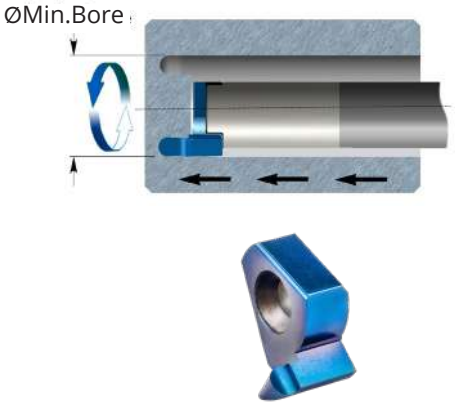

Insert Type	Ordering Code	W ±0.02	R	H max	D min	F
T10	**T10 ZI R05 H15**	1.0	0.5	1.5	14.0	8.0
	T10 ZI R08 H25	1.6	0.8	2.5		
	T10 ZI R10 H30	2.0	1.0	3.0		
	T10 ZI R125 H30	2.5	1.25	3.0		
	T10 ZI R15 H30	3.0	1.5	3.0		

Order example: T10 ZI R05 H15 BLU

External

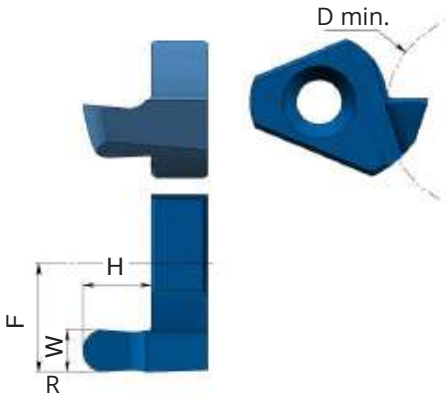

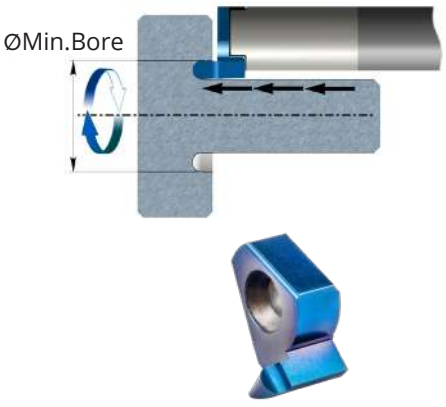

Insert Type	Ordering Code	W ±0.02	R	H max	D min	F
T10	**T10 ZE R05 H15**	1.0	0.5	1.5	12.0	8.0
	T10 ZE R08 H25	1.6	0.8	2.5		
	T10 ZE R10 H30	2.0	1.0	3.0		
	T10 ZE R125 H30	2.5	1.25	3.0		
	T10 ZE R15 H30	3.0	1.5	3.0		

Carbide Shank Toolholders

With through coolant

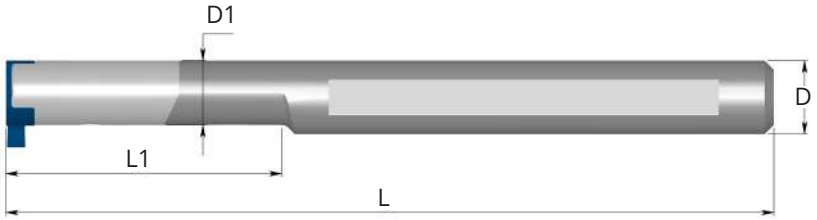

Insert Type	Ordering Code	D	D1	L1	L	Insert Screw	Torx Key
T8	**ST 0008 L20 F08C**	8	7	20	80	S5	K5
	ST 0008 L30 G08C	8	7	30	95	S5	K5
	ST 0008 L40 H08C	8	7	40	105	S5	K5

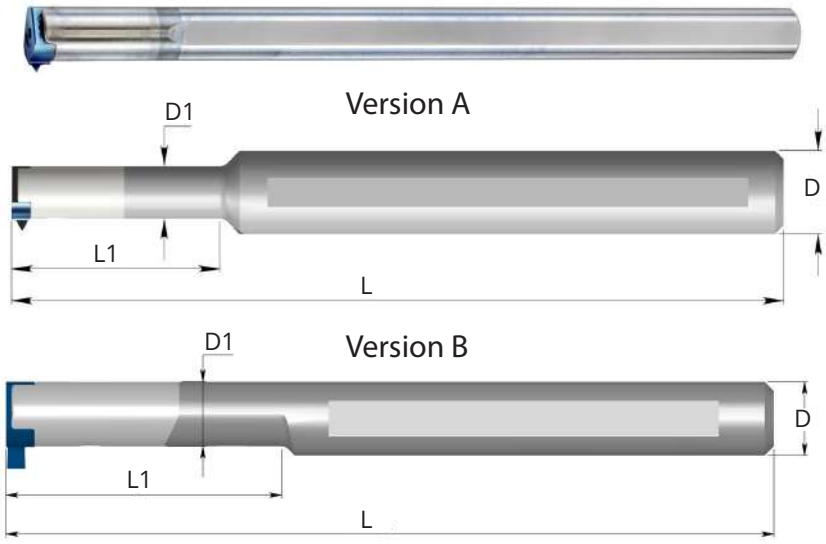

Insert Type	Ordering Code	D	D1	L1	L	Insert Screw	Torx Key	Toolholder Version
T10	**ST 0010 L29 H10C**	10	8.8	29	100	S11	K11	B
	ST 0010 L40 J10C	10	8.8	40	110	S11	K11	B
	ST 0010 M10C	10	10.0	-	150	S11	K11	A
	ST 0012 L37 J10C	12	8.8	37	110	S11	K11	B
	ST 0012 L40 J10C	12	10.0	40	110	S11	K11	A
	ST 0012 L50 K10C	12	8.8	50	125	S11	K11	B
	ST 0012 L55 K10C	12	10.0	55	125	S11	K11	A

Order example: ST 0012 L37 J10C

Steel Toolholders

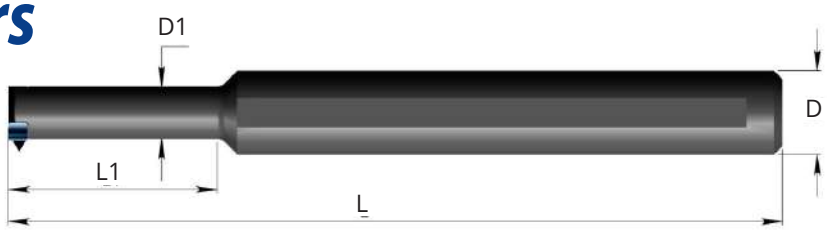

Insert Type	Ordering Code	D	D1	L1	L	Insert Screw	Torx Key
T10	**ST 0012 L25 E10**	12	10	25	70	S11	K11
	ST 0016 L25 G10	16	10	25	90	S11	K11
	ST 0016 L35 H10	16	10	35	100	S11	K11

Technical Section

Carbide Grades

BLU PVD triple layer coated Sub-Micron grade for Steel, Stainless Steels, Titanium and hard materials.

Cutting Data

ISO	Materials	Cutting Speed m/min	Recommended feed rate mm/rev
P	Low and Medium Carbon Steels <0.55%C	25 - 70	Grooving: 0.01-0.03 Back turning: 0.03-0.10 Face grooving: 0.01-0.08 Chamfering: 0.02-0.08
	High Carbon Steels ≥0.55%C	20 - 50	
	Alloy Steels, Treated Steels	15 - 30	
M	Stainless Steels - Free Cutting	25 - 70	
	Stainless Steels - Austenitic	20 - 40	
	Cast Steels	30 - 70	
K	Cast Iron	15 - 30	
N	Aluminum ≤12%Si, Copper	30 - 90	
	Aluminum >12% Si	20 - 70	
	Synthetics, Duroplastics, Thermoplastics	20 - 70	
S	Nickel Alloys, Titanium Alloys	20 - 50	
H	Hardened Steel 45 - 50HRc	10 - 40	

Threading Passes

Pitch:	mm TPI	0.5 48	0.7 36	0.8 32	1.0 24	1.25 20	1.5 16	2-5 14-5
Number of Passes		6-12	7-14	7-16	8-18	8-20	10-22	20-38

Swiss-Line

A08



Contents: Page:

Introduction	2
Polygon Inserts and Toolholders	2-15
Product Identification - Inserts	3
Grooving and Turning	4
Grooving, Circlip Ring Grooves	5
Grooving and Profiling (full radius)	6
Parting Off and Grooving	7-8
Back Turning	9
Front Turning	9
Threading - Partial Profile 60°	10
Threading - Partial Profile 55°	10
Threading - ISO metric 60° Full Profile	11
Threading - UN unified 60° Full Profile	11
External Toolholders	12-13
Product Identification - Toolholders	12
External Toolholders with Internal Coolant	13
Working Method	14
Technical Section - Polygon Swiss Line	15
3 Cutting Edges Swiss Line Inserts and Toolholders	16-30
Product Identification –Inserts	17
16 mm Inserts and Toolholders	18
Grooving	18
Grooving, Circlip Ring Grooves	18
External Toolholders	19
Technical Section -	
3 Cutting Edges Swiss Line Inserts (16 mm)	20
19,20 mm Inserts and Toolholders	21
Grooving and Turning	21
Grooving and Profiling (full radius)	22
Parting Off	23
Back Turning	24
Front Turning	24
Threading - Partial Profile 60°	25
Threading - Partial Profile 55°	25
Threading - ISO metric 60° - Full Profile	26
Threading - UN unified 60° - Full Profile	26
External Toolholders	27-28
Product Identification – Toolholders	27
Slim Holders	28
Working Method: Grooving – Parting Off – Turning – Profiling – Threading	29
Technical Section -	
3 Cutting Edges Swiss Line Inserts (19,20 mm)	30
Swiss-Line G4	**31-40**
Product identification – inserts	32
Grooving	33
Grooving and Profiling (full radius)	34
Parting Off and Grooving	35
Threading-Partial profile 60°	36
Threading-Partial profile 55°	36
Threading - ISO metric 60° Full Profile	37
Threading-UN unified 60° Full Profile	38
External Toolholders	39
Technical Section – G4 Inserts	40
6 Cutting edges G6 Turning Inserts and Toolholders	41-50
Product Identification - Inserts	42
Grooving	43
Grooving, Circlip Ring Grooves	44
Grooving and Profiling (full radius)	44
Parting Off and Grooving	45
Back Turning	46
Front Turning	46
Threading - Partial Profile 60°	47
Threading - Partial Profile 55°	47
Threading - ISO metric 60° Full Profile	48
Threading - UN unified 60° Full Profile	48
External Toolholders	49
Product Identification - Toolholders	49
Technical Section – G6 Inserts	50

Swiss-Line

- Swiss style lathes are becoming a popular alternative to large lathes and machining centers in many companies.
- CPT offers a large and versatile product line of inserts and toolholders, developed for automatic and Swiss style lathes.
- Designed for economic production of parting, grooving, profiling threading and chamfering.

Polygon Inserts and Toolholders

CPT extends the Swiss Line range by offering a new type of polygon inserts and toolholders for external turning, grooving, parting and threading on Swiss-Type machines. Specially designed for small parts machining.



Features

- High precision ground inserts.
- All inserts can be used with same toolholders.
- A combination of the latest carbide and coating technologies guarantees maximum tool life and improved productivity.
- Compatible with a wide range of materials.
- Coated holders provide abrasive resistance.

Carbide grades: BLU, GX7, K20

Product Identification - Ordering Codes

Polygon Inserts

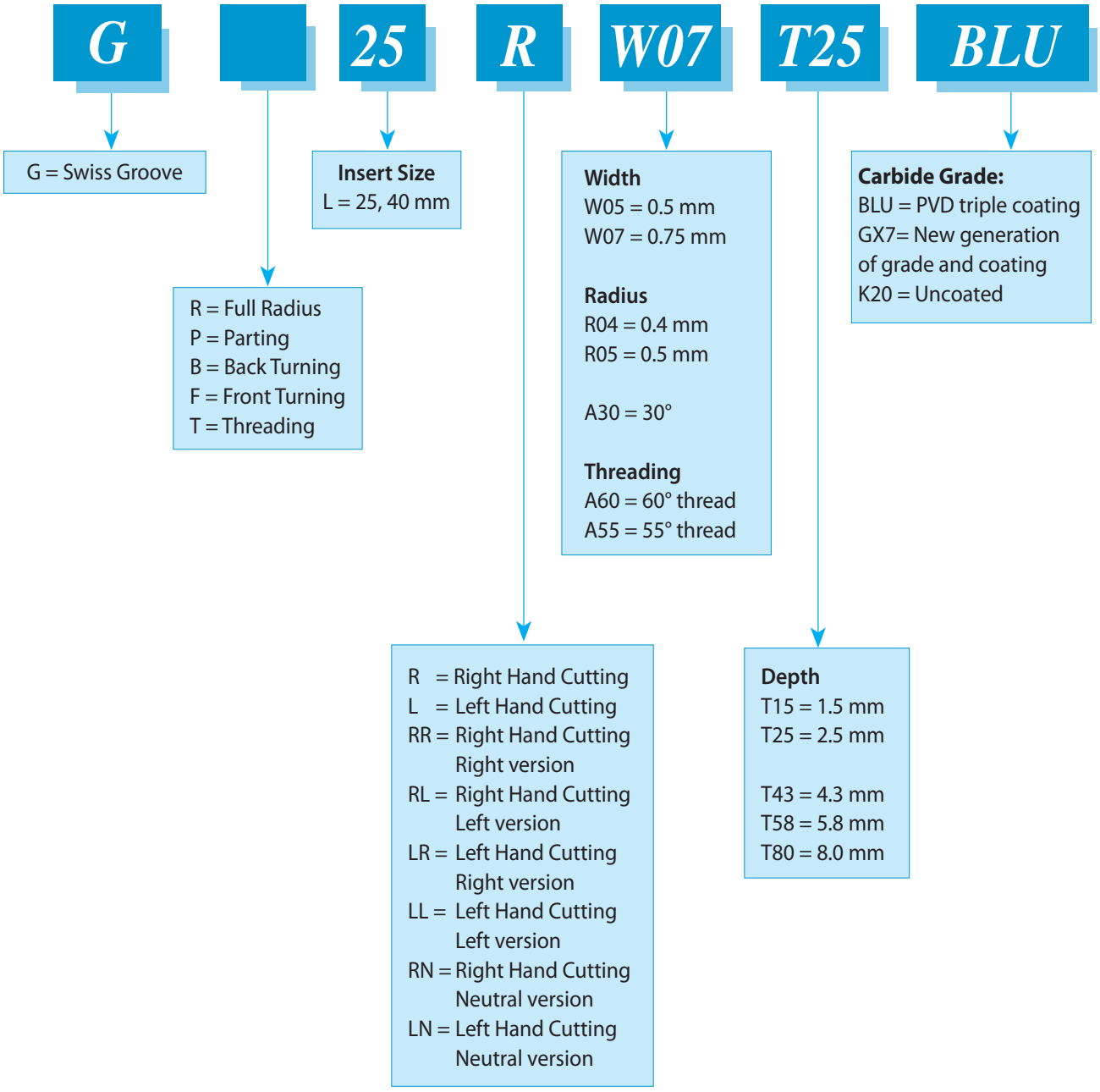

Grooving and Turning

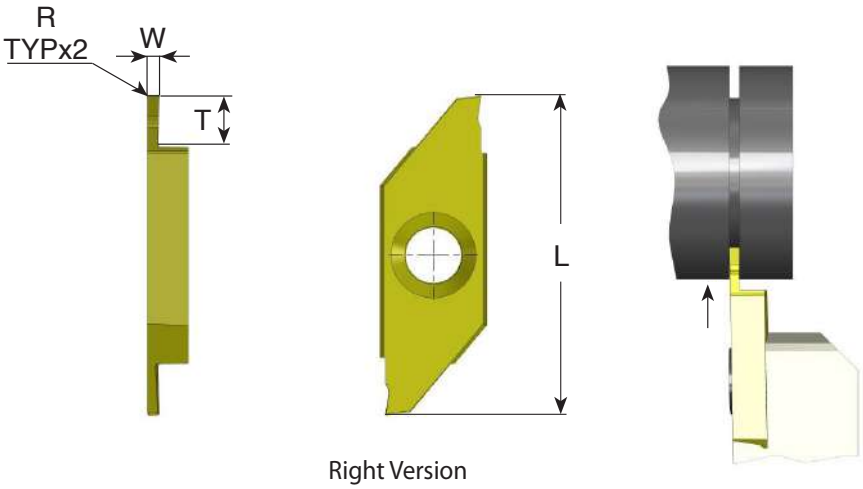

Right Version

Right hand cutting

Insert Size L	Ordering Code	W ± 0.02	T max	R	Feed mm/rev
25	**G25 R W05 T15**	0.5	1.5	0	0.01-0.06
	G25 R W07 T25	0.75	2.5	0	0.02-0.07
	G25 R W10 T27	1.0	2.7	0.05	0.02-0.09
	G25 R W12 T30	1.2	3.0	0.05	0.02-0.10
	G25 R W15 T38	1.5	3.8	0.05	0.02-0.12
	G25 R W20 T38	2.0	3.8	0.05	0.02-0.13
	G25 R W25 T38	2.5	3.8	0.05	0.02-0.14
40	**G40 R W30 T80**	3.0	8.0	0.05	0.02-0.14
	G40 R W40 T80	4.0	8.0	0.05	0.02-0.14

	K20	BLU	GX7*
P		●	●
M	●	●	●
K	●	○	○
N	●		
S	○	○	●
H		≤45 HRc	≤58 HRc

For L.H, specify G25 L instead of G25 R

* Available for insert size G25... only

● First choice ○ Alternative

Grooving, Circlip Ring Grooves

DIN 471/472

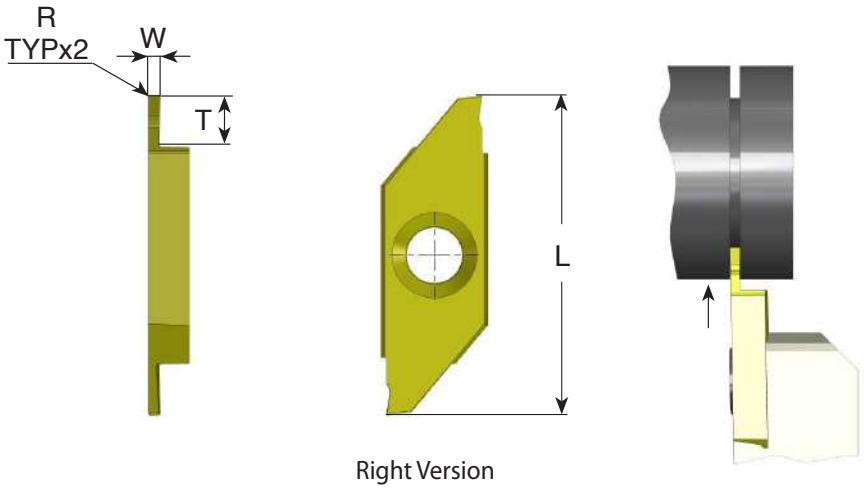

Right Version

Right hand cutting

Insert Size L	Ordering Code	Nom` groove width	W-0.05	T max	R	Feed Inch/rev
25	**GD25 R W05 T16**	0.50	0.57	1.6	0	0.01-0.06
	GD25 R W06 T17	0.60	0.67	1.7	0	0.01-0.06
	GD25 R W07 T19	0.70	0.77	1.9	0	0.02-0.07
	GD25 R W08 T22	0.80	0.87	2.2	0	0.02-0.09
	GD25 R W09 T24	0.90	0.97	2.4	0	0.02-0.09
	GD25 R W12 T31	1.10	1.24	3.1	0.05	0.02-0.10
	GD25 R W14 T33	1.30	1.44	3.3	0.05	0.02-0.12
	GD25 R W17 T33	1.60	1.74	3.3	0.05	0.02-0.13
	GD25 R W19 T39	1.85	1.99	3.9	0.05	0.02-0.13
	GD25 R W22 T45	2.15	2.29	4.5	0.05	0.02-0.14
	GD25 R W27 T55	2.65	2.79	5.5	0.05	0.02-0.14

	K20	BLU	GX7
P		●	●
M	●	●	●
K	●	○	○
N	●		
S	○	○	●
H		≤45 HRc	≤58 HRc

For L.H, specify GD25 L instead of GD25 R
Nom`= nominal

● First choice ○ Alternative

Grooving and Profiling (full radius)

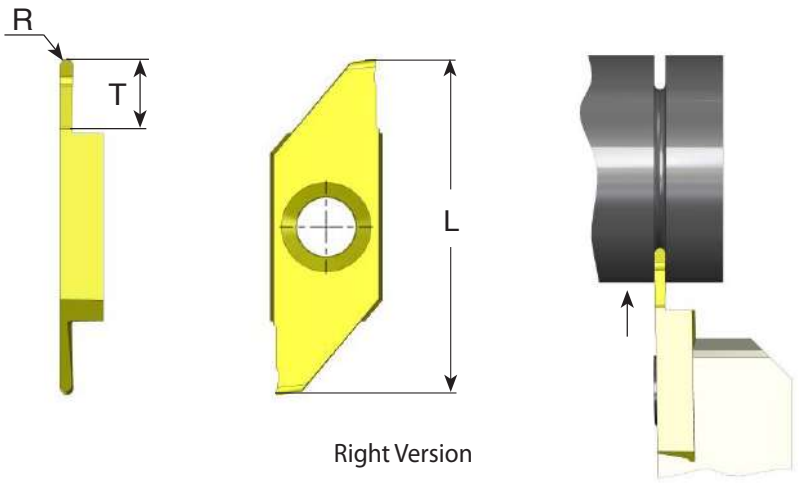

Right Version

Right hand cutting

Insert Size L	Ordering Code	R±0.03	T max	Feed mm/rev
25	**GR25 R R02 T15**	0.25	1.5	0.01-0.06
	GR25 R R04 T25	0.40	2.5	0.02-0.07
	GR25 R R05 T27	0.50	2.7	0.02-0.09

For L.H, specify GR25 L instead of GR25 R

	K20	BLU	GX7
P		●	●
M	●	●	●
K	●	○	○
N	●		
S	○	○	●
H		≤45 HRc	≤58 HRc

● First choice ○ Alternative

Parting Off and Grooving

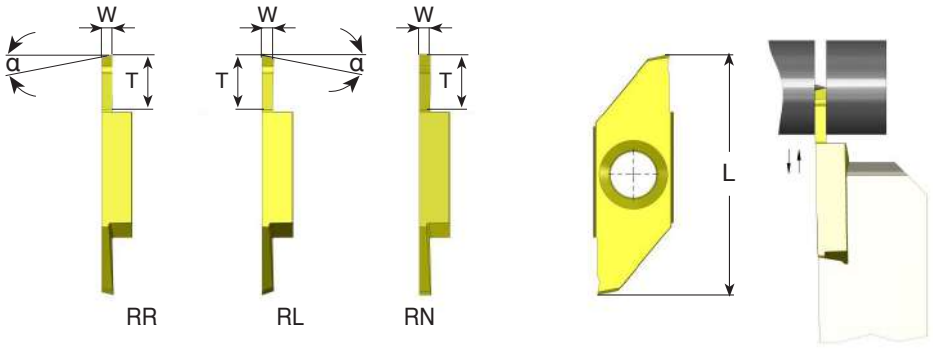

Right Version

Right hand cutting

Insert Size L	Ordering Code	W	α°	T max	Feed mm/rev
25	GP25 RR W05 T30	0.5	15	3.0	0.02-0.06
	GP25 RL W05 T30	0.5	15	3.0	0.02-0.06
	GP25 RN W05 T30	0.5	0	3.0	0.02-0.06
	GP25 RR W07 T43	0.7	15	4.3	0.02-0.08
	GP25 RL W07 T43	0.7	15	4.3	0.02-0.08
	GP25 RN W07 T43	0.7	0	4.3	0.02-0.08
	GP25 RR W08 T50	0.8	15	5.0	0.02-0.08
	GP25 RL W08 T50	0.8	15	5.0	0.02-0.08
	GP25 RN W08 T50	0.8	0	5.0	0.02-0.08
	GP25 RR W10 T58	1.0	15	5.8	0.02-0.13
	GP25 RL W10 T58	1.0	15	5.8	0.02-0.13
	GP25 RN W10 T58	1.0	0	5.8	0.02-0.13
	GP25 RR W12 T58	1.2	15	5.8	0.02-0.13
	GP25 RL W12 T58	1.2	15	5.8	0.02-0.13
	GP25 RN W12 T58	1.2	0	5.8	0.02-0.13
	GP25 RR W15 T58	1.5	15	5.8	0.02-0.13
	GP25 RL W15 T58	1.5	15	5.8	0.02-0.13
	GP25 RN W15 T58	1.5	0	5.8	0.02-0.13
	GP25 RR W18 T58	1.8	15	5.8	0.02-0.13
	GP25 RL W18 T58	1.8	15	5.8	0.02-0.13
	GP25 RN W18 T58	1.8	0	5.8	0.02-0.13
	GP25 RR W20 T58	2.0	15	5.8	0.02-0.13
	GP25 RL W20 T58	2.0	15	5.8	0.02-0.13
	GP25 RN W20 T58	2.0	0	5.8	0.02-0.13
	GP25 RR W20 T75	2.0	15	7.5	0.02-0.10
	GP25 RL W20 T75	2.0	15	7.5	0.02-0.10
	GP25 RN W20 T75	2.0	0	7.5	0.02-0.10
	GP25 RR W25 T58	2.5	15	5.8	0.04-0.13
	GP25 RL W25 T58	2.5	15	5.8	0.04-0.13
	GP25 RN W25 T58	2.5	0	5.8	0.04-0.13

	K20	BLU	GX7
P		●	●
M	●	●	●
K	●	○	○
N	●		
S	○	○	●
H		≤45 HRc	≤58 HRc

For L.H, specify GP25 LR instead of GP25 RR
GP25 LL instead of GP25 RL
GP25 LN instead of GP25 RN

● First choice ○ Alternative

Parting Off and Grooving

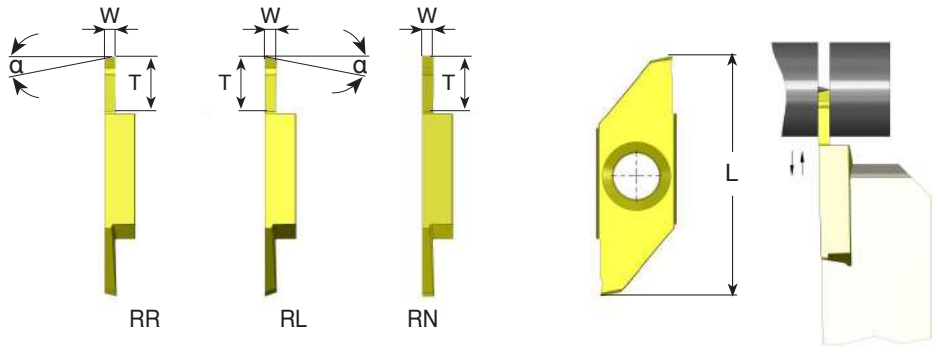

Right Version

Right hand cutting

Insert Size L	Ordering Code	W	α°	T max	Feed mm/rev
40	**GP40 RR W15 T80**	1.5	15	8.0	0.03-0.08
	GP40 RL W15 T80	1.5	15	8.0	0.03-0.08
	GP40 RN W15 T80	1.5	0	8.0	0.03-0.08
	GP40 RR W18 T95	1.8	15	9.5	0.03-0.08
	GP40 RL W18 T95	1.8	15	9.5	0.03-0.08
	GP40 RN W18 T95	1.8	0	9.5	0.03-0.08
	GP40 RR W20 T110	2.0	15	11.0	0.03-0.08
	GP40 RL W20 T110	2.0	15	11.0	0.03-0.08
	GP40 RN W20 T110	2.0	0	11.0	0.03-0.08
	GP40 RR W25 T130	2.5	15	13.0	0.03-0.08
	GP40 RL W25 T130	2.5	15	13.0	0.03-0.08
	GP40 RN W25 T130	2.5	0	13.0	0.03-0.08
	GP40 RR W30 T130	3.0	15	13.0	0.03-0.08
	GP40 RL W30 T130	3.0	15	13.0	0.03-0.08
	GP40 RN W30 T130	3.0	0	13.0	0.03-0.08

	K20	BLU
P		●
M	●	●
K	●	○
N	●	
S	●	●
H		≤45 HRc

For L.H, specify GP40 LR instead of GP40 RR
GP40 LL instead of GP40 RL
GP40 LN instead of GP40 RN

● First choice ○ Alternative

Back Turning

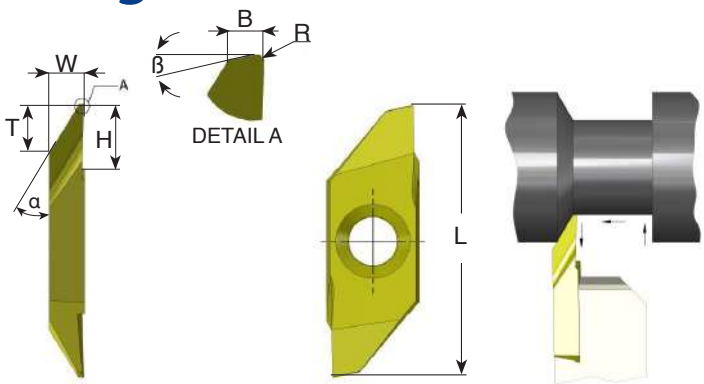

Right Version

Right hand cutting

Insert Size L	Ordering Code	α°	ß°	R	W	T max	B	H	Feed mm/rev
25	**GB25 R A30 R03**	30	15	0.03	3.0	4.0	0.5	8.0	0.05-0.12
	GB25 R A30 R10	30	15	0.10	3.0	4.0	0.5	8.0	0.05-0.12
	GB25 R A30 R20	30	15	0.20	3.0	4.0	0.5	8.0	0.05-0.12

For L.H, specify GB25 L instead of GB25 R

	K20	BLU
P		●
M	●	●
K	●	○
N	●	
S	●	●
H		≤45 HRc

Front Turning

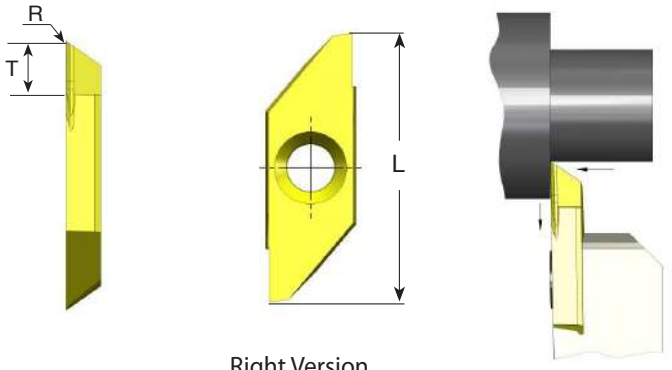

Right Version

Right hand cutting

Insert Size L	Ordering Code	T max	R	Feed mm/rev
25	**GF25 R T40**	4.0	0.05	0.05-0.12
	GF25 R T40 R10	4.0	0.10	0.05-0.12
	GF25 R T70	7.0	0.05	0.05-0.08

For L.H, specify GF25 L instead of GF25 R

	K20	BLU
P		●
M	●	●
K	●	○
N	●	
S	●	●
H		≤45 HRc

● First choice ○ Alternative

Threading - Partial Profile 60°

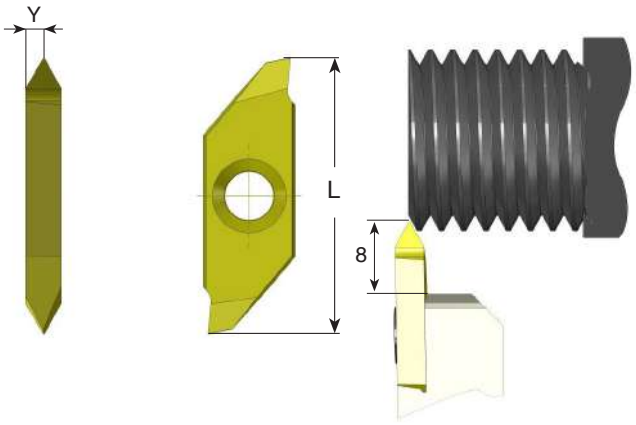

Right Version

Right hand cutting

Insert Size L	Ordering Code	Pitch Range mm	Pitch Range TPI	Y
25	**GT25 R A60**	0.25-0.8	100-32	0.7
	GT25 R G60	1.0-3.0	24-8	1.6

For L.H, specify GT25 L instead of GT25 R

	K20	BLU
P		●
M	●	●
K	●	○
N	●	
S	●	●
H		≤45 HRc

Threading - Partial Profile 55°

Right hand cutting

Insert Size L	Ordering Code	Pitch Range mm	Pitch Range TPI	Y
25	**GT25 R A55**	0.5-1.5	48-16	1.0
	GT25 R G55	1.75-3.0	14-8	1.6

For L.H, specify GT25 L instead of GT25 R

	K20	BLU
P		●
M	●	●
K	●	○
N	●	
S	●	●
H		≤45 HRc

● First choice ○ Alternative

Threading - ISO metric 60° Full Profile

External thread

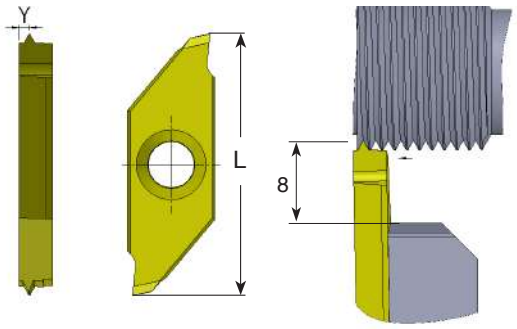

Right Version

Right hand cutting

Insert Size L	Ordering Code	Pitch mm	Y
25	**GT25 R 0.5 ISO**	0.5	0.6
	GT25 R 0.6 ISO	0.6	0.6
	GT25 R 0.7 ISO	0.7	0.7
	GT25 R 0.75 ISO	0.75	0.7
	GT25 R 0.8 ISO	0.8	0.7
	GT25 R 1.0 ISO	1.0	0.8
	GT25 R 1.25 ISO	1.25	1.0
	GT25 R 1.5 ISO	1.5	1.1

	K20	BLU
P		●
M	●	●
K	●	○
N	●	
S	●	●
H		≤45 HRc

For L.H, specify GT25 L instead of GT25 R

Threading - UN unified 60° Full Profile

External thread

Right hand cutting

Insert Size L	Ordering Code	Pitch TPI	Y
25	**GT25 R 56 UN**	56	0.6
	GT25 R 40 UN	40	0.7
	GT25 R 32 UN	32	0.7
	GT25 R 24 UN	24	0.8

	K20	BLU
P		●
M	●	●
K	●	○
N	●	
S	●	●
H		≤45 HRc

For L.H, specify GT25 L instead of GT25 R

● First choice ○ Alternative

External Toolholders

Product Identification - Ordering Codes

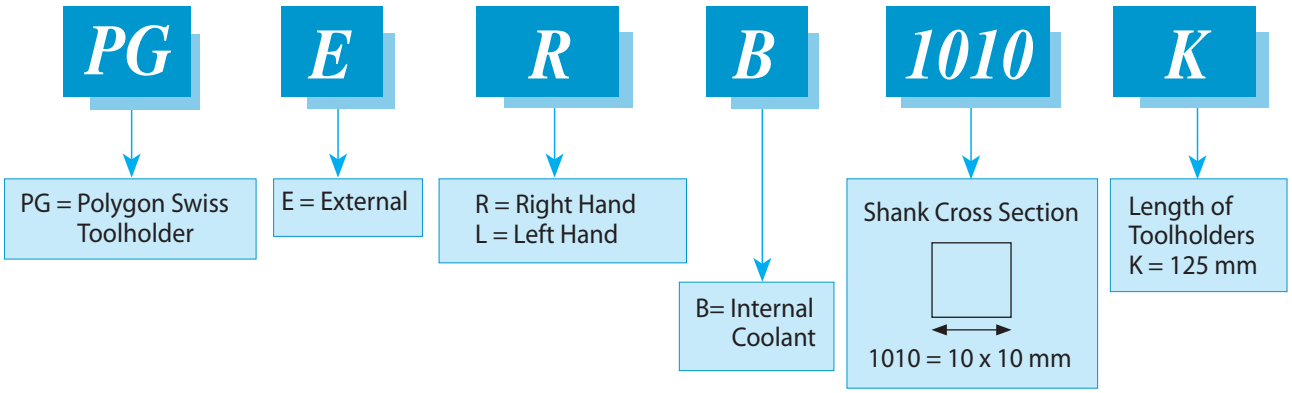

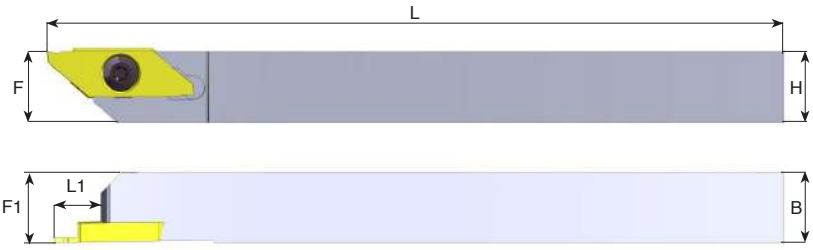

Right Version



Right hand cutting

Insert Size	Ordering Code	B	H	L1	L	F	F1	Insert Screw Torx+	Key Torx+
25	**PGER 0808 K**	8	8	8	125	10	10	S26PD	K11P
	PGER 1010 K	10	10	8	125	10	10	S26PD	K11P
	PGER 1212 K	12	12	8	125	12	12	S26PD	K11P
	PGER 1616 K	16	16	8	125	16	16	S26PD	K11P
	PGER 2020 K	20	20	8	125	20	20	S26PD	K11P
40	**PGER 1010 K40**	10	10	13	125	10	10	S26PD	K11P
	PGER 1212 K40	12	12	13	125	12	12	S26PD	K11P
	PGER 1616 K40	16	16	13	125	16	16	S26PD	K11P
	PGER 2020 K40	20	20	13	125	20	20	S26PD	K11P
	PGER 2525 M40	25	25	13	150	25	25	S26PD	K11P

For L.H, specify PGE L instead of PGE R

External Toolholders
with internal coolant

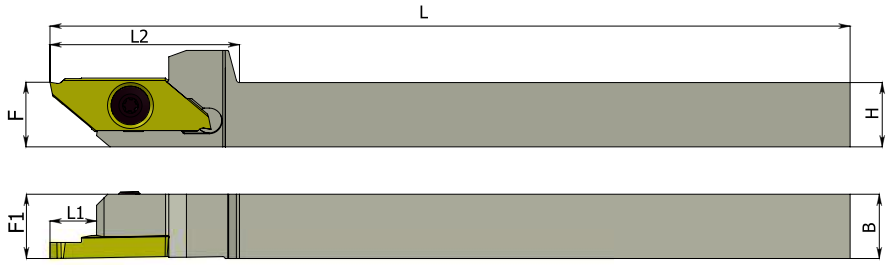

Right Version

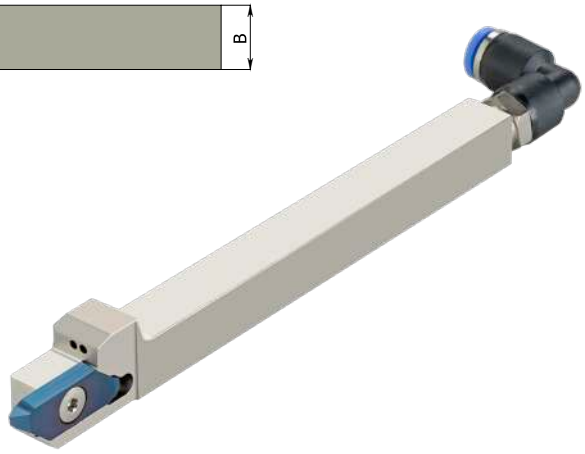

Right hand cutting

Insert Size	Ordering Code	B	H	L1	L2	L	F	F1	Insert Screw Torx+	Key Torx+	*Coolant connector
25	**PGERB 1010 K**	10	10	8	30	125	10	10	S26PD	K11P	Ø4 / Ø6
	PGERB 1212 K	12	12	8	30	125	12	12	S26PD	K11P	Ø4 / Ø6
	PGERB 1616 K	16	16	8	30	125	16	16	S26PD	K11P	Ø4 / Ø6

For L.H, specify PGE L B instead of PGE R B

* Coolant pipe diameter

Working Method

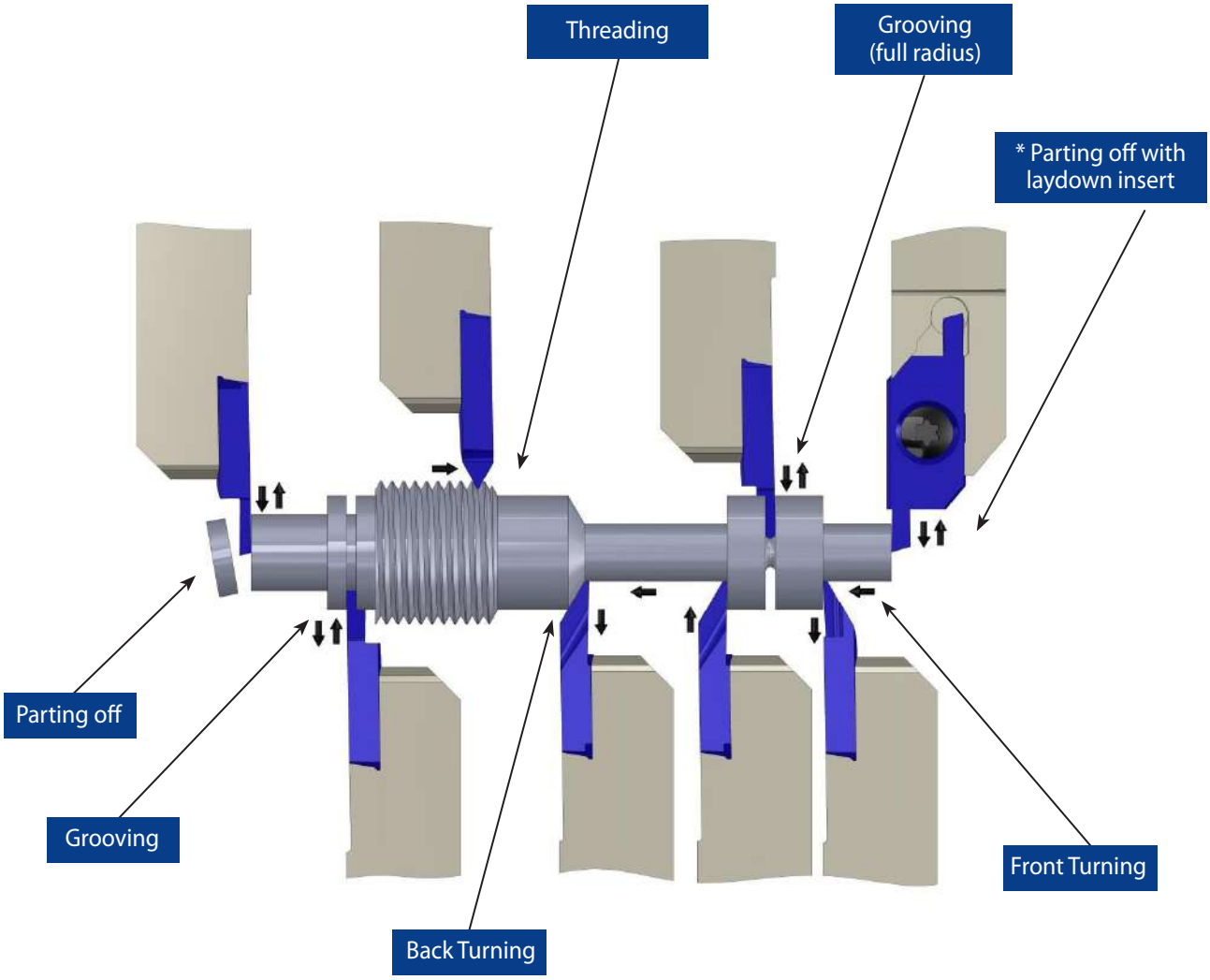

* Available upon request (grooving, parting, threading)

Polygon Swiss Line

Carbide Grades

BLU

PVD triple layer coated Sub-Micron grade for Steel, Stainless Steels, Titanium and hard materials.

GX7

New generation of PVD triple layer coated Sub-Micron grade for wide range of materials as: Steel, Stainless Steels, Titanium and hard materials up to 58 HRc.
With high toughness for optimized performance.

K20

Uncoated Sub-Micron carbide grade for Aluminum and non-ferrous materials, Stainless Steels and Titanium.

Cutting Data

ISO Standard	Materials	Cutting Speed m/min		
		K20	BLU	GX7*
P	Low & Medium Carbon Steels <0.55%C	-	80-150	70-160
	High Carbon Steels ≥0.55%C	-	70-120	60-130
	Alloy Steels, Treated Steels	-	40-80	40-100
M	Stainless Steel-Free Cutting	30-80	60-120	60-140
	Stainless Steel-Austenitic	20-70	30-90	30-120
	Cast Steels	30-80	50-120	50-140
K	Cast Iron	50-120	60-130	60-140
N	Aluminum ≤12%Si, Copper	120-250	-	-
	Aluminum >12%Si	90-200	-	-
	Synthetics, Duroplastics, Thermoplastics	70-150	-	-
S	Nickel Alloys, Titanium Alloys	20-50	30-70	30-90
H	Hardened Steel, 45-50HRc	-	20-50	20-70
	Hardened Steel, 50-58HRc	-	-	20-60

* Available for grooving and parting off, with G25 insert size

3 Cutting Edges Swiss Line Inserts and Toolholders

- **Swiss style lathes are becoming a popular alternative to large lathes and machining centers in many companies**
- **CPT offers a large and versatile product line of inserts and toolholders, developed for automatic and Swiss style lathes**
- **Designed for economic production of parting, grooving, profiling and chamfering**

Advantages

Advanced sub-micron grade (K10-K30) - a combination of strength, toughness, wear resistance and edge sharpness

- Grounded cutting edges
- Advanced and unique PVD triple coating, for high wear and heat resistance
- For most types of material, including Stainless Steels, Titanium and Super Alloys

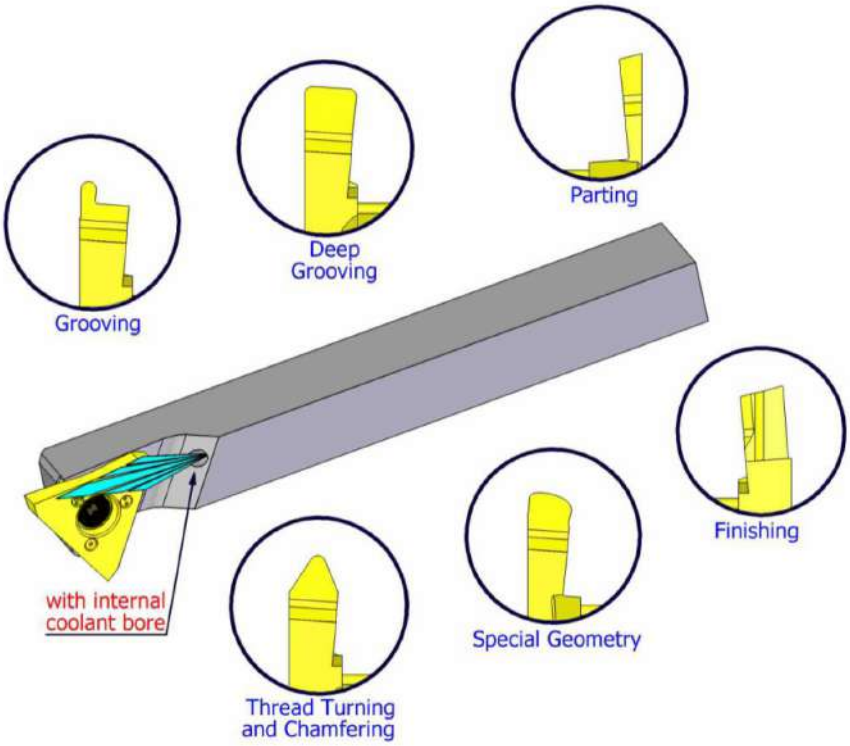

- Three cutting edges
- The insert can be indexed directly on the machine
- Internal coolant to the cutting edge

Product Identification - Ordering Codes

Inserts

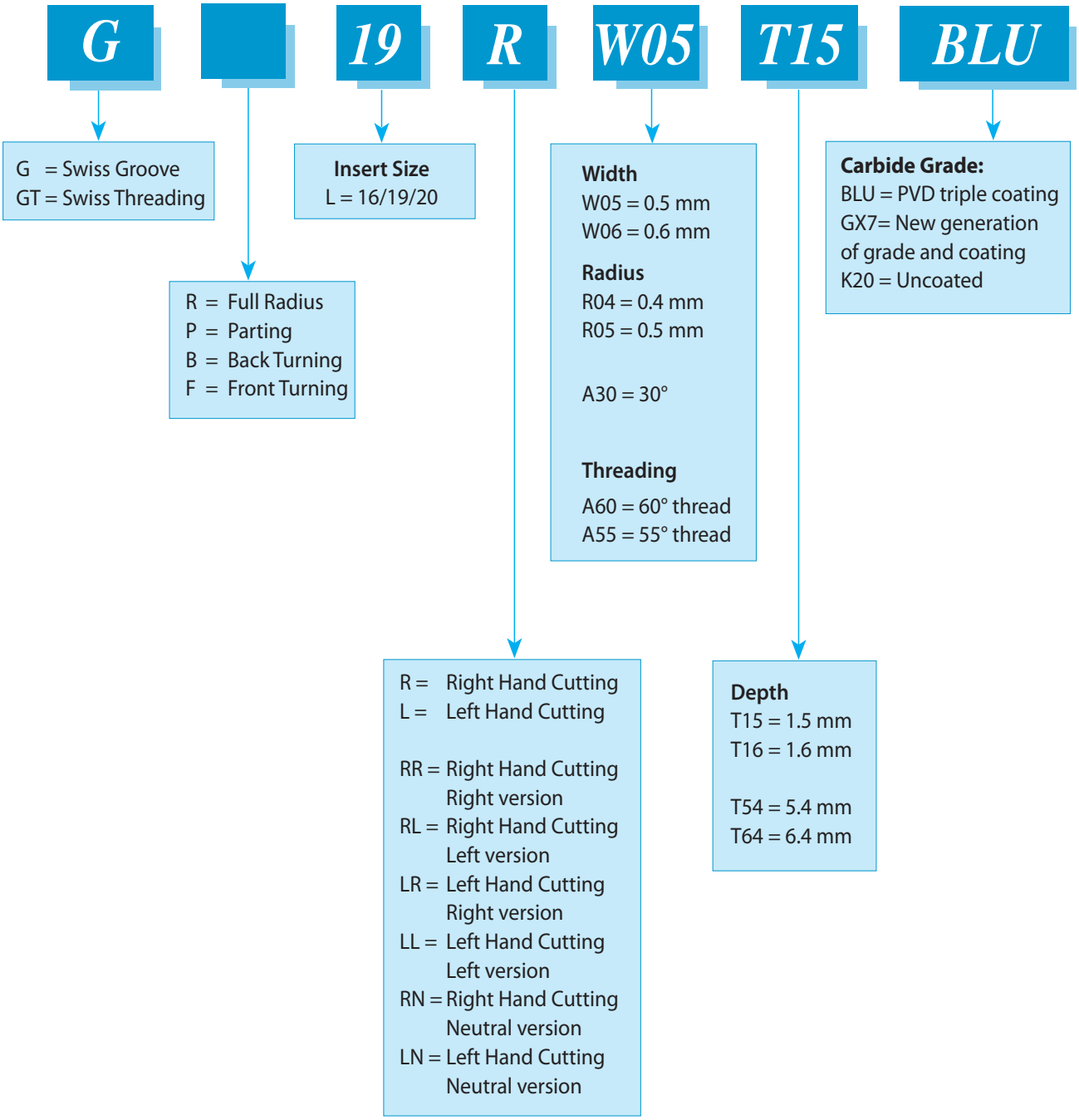

16 mm Inserts and Toolholders

Grooving

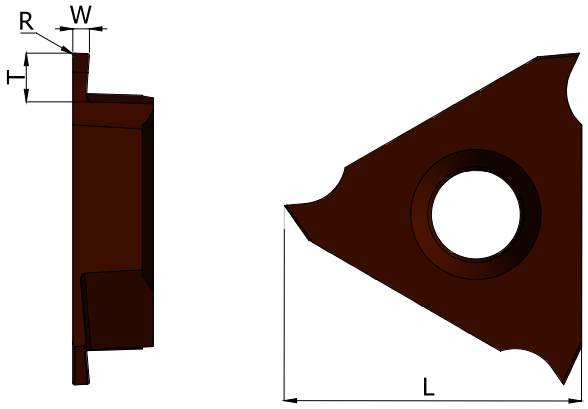

Right Version

Right hand cutting

Insert Size L	Ordering Code	W ±0.02	T max	R	Feed mm/rev	
					Radial	Axial
16	**G16 R W05 T12**	0.5	1.2	0.05	0.01-0.06	0.02-0.08
	G16 R W10 T20	1.0	2.0	0.05	0.02-0.07	0.02-0.10
	G16 R W15 T25	1.5	2.5	0.10	0.03-0.08	0.02-0.10
	G16 R W20 T25	2.0	2.5	0.15	0.05-0.10	0.02-0.15
	G16 R W25 T25	2.5	2.5	0.20	0.05-0.10	0.02-0.15

	K20	GX7
P		●
M	●	●
K	●	○
N	●	
S	●	●
H		≤58 HRc

For L.H, specify G16 L instead of G16 R

Grooving, Circlip Ring Grooves

DIN 471/472

Right hand cutting

Insert Size L	Ordering Code	Nom` groove width	W-0.05	T max	R	Feed mm/rev	
						Radial	Axial
16	**G16 R W07 T20**	0.7	0.77	2.0	0	0.01-0.06	0.02-0.08
	G16 R W08 T20	0.8	0.87	2.0	0	0.01-0.06	0.02-0.08
	G16 R W09 T25	0.9	0.97	2.5	0	0.02-0.07	0.02-0.10
	G16 R W12 T25	1.1	1.24	2.5	0.05	0.02-0.07	0.02-0.10
	G16 R W14 T25	1.3	1.44	2.5	0.05	0.03-0.08	0.02-0.10
	G16 R W17 T25	1.6	1.74	2.5	0.05	0.03-0.08	0.02-0.10

	K20	GX7
P		●
M	●	●
K	●	○
N	●	
S	●	●
H		≤58 HRc

For L.H, specify G16 L instead of G16 R

Nom` = nominal

● First choice ○ Alternative

External Toolholders

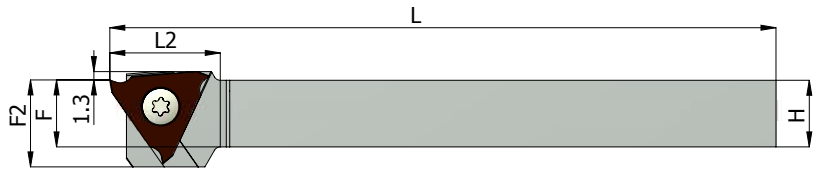



Right Version

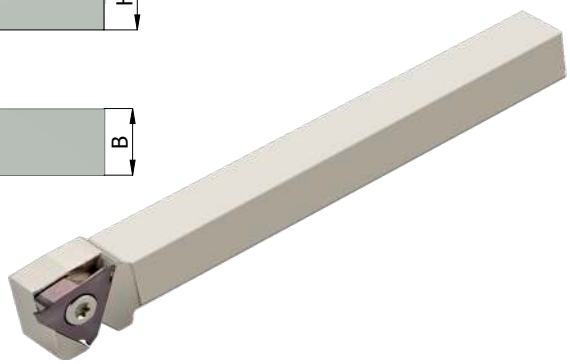

Right hand cutting

Ordering Code	B	H	T	L2	L	F	F1	F2	Insert Screw Torx+	Key Torx+
VGER 0810 K	10	8	2.6	17	125	8	10	13	S16PS	K16P
VGER 1010 K	10	10	2.6	17	125	10	10	13	S16PS	K16P
VGER 1212 K	12	12	2.6	17	125	12	12	13	S16P	K16P
VGER 1616 K	16	16	2.6	17	125	16	16	16	S16P	K16P

For L.H, specify VGE L instead of VGE R

3 Cutting Edges Swiss Line Inserts (16 mm)

Carbide Grades

GX7

New generation of PVD triple layer coated Sub-Micron grade for wide range of materials as: Steel, Stainless Steels, Titanium and hard materials up to 58 HRc.
With high toughness for optimized performance.

K20

Uncoated Sub-Micron carbide grade for Aluminum and non-ferrous materials, Stainless Steels and Titanium.

Cutting Data

ISO Standard	Materials	Cutting Speed m/min	
		K20	GX7
P	Low & Medium Carbon Steels <0.55%C	-	80-150
	High Carbon Steels ≥0.55%C	-	70-120
	Alloy Steels, Treated Steels	-	40-80
M	Stainless Steel-Free Cutting	30-80	60-120
	Stainless Steel-Austenitic	20-70	30-90
	Cast Steels	30-80	50-120
K	Cast Iron	50-120	50-120
N	Aluminum ≤12%Si, Copper	120-250	-
	Aluminum >12%Si	90-200	-
	Synthetics, Duroplastics, Thermoplastics	70-150	-
S	Nickel Alloys, Titanium Alloys	20-50	30-70
H	Hardened Steel, 45-58HRc	-	20-50

19,20 mm Inserts and Toolholders

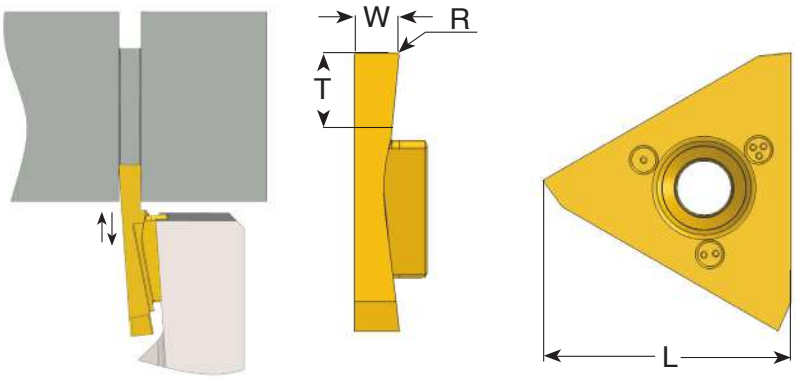

Right Version

Grooving and Turning

Right hand cutting

Insert Size L	Ordering Code	W ±0.02	T max	R	Feed mm/rev	
					Radial	Axial
19	G19 R W05 T15	0.5	1.5	0	0.01-0.06	0.02-0.10
	G19 R W06 T16	0.6	1.6	0	0.01-0.06	0.02-0.10
	G19 R W07 T17	0.75	1.7	0	0.01-0.06	0.02-0.10
	G19 R W08 T18	0.8	2.0	0.05	0.01-0.06	0.02-0.10
	G19 R W10 T22	1.0	2.5	0.05	0.02-0.07	0.02-0.10
	G19 R W12 T24	1.2	3.0	0.05	0.02-0.07	0.02-0.10
	G19 R W14 T28	1.4	3.0	0.05	0.03-0.08	0.02-0.10
	G19 R W15 T30	1.5	3.0	0.05	0.03-0.08	0.02-0.10
	G19 R W17 T34	1.7	4.0	0.05	0.04-0.09	0.02-0.20
20	G20 R W20 T40	2.0	4.0	0.1	0.05-0.10	0.02-0.20
	G20 R W22 T45	2.25	5.0	0.1	0.05-0.10	0.02-0.20
	G20 R W25 T50	2.5	6.0	0.1	0.05-0.10	0.02-0.20
	G20 R W30 T60	3.0	6.0	0.1	0.05-0.10	0.02-0.20

For L.H, specify G19 L instead of G19 R

	K20	BLU
P		●
M	●	●
K	●	○
N	●	
S	●	●
H		≤45 HRc

● First choice ○ Alternative

Grooving and Profiling (full radius)

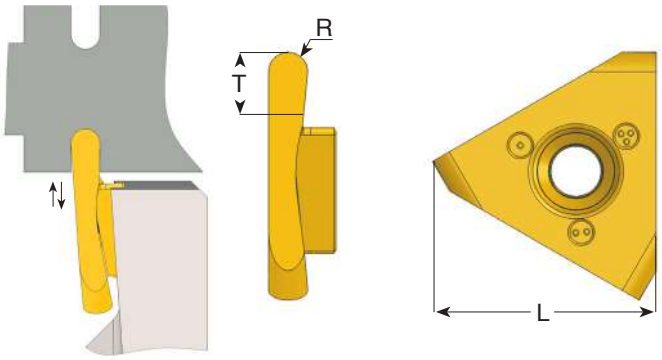

Right Version

Right hand cutting

Insert Size L	Ordering Code	R ±0.03	T max	Feed mm/rev	
				Radial	Axial
19	**GR19 R R02 T15**	0.25	1.5	0.01-0.06	0.02-0.10
	GR19 R R04 T18	0.40	2.0	0.01-0.06	0.02-0.10
	GR19 R R05 T22	0.50	2.5	0.02-0.07	0.02-0.10
	GR19 R R06 T26	0.60	3.0	0.02-0.07	0.02-0.10
	GR19 R R08 T33	0.80	3.5	0.04-0.09	0.02-0.20
	GR19 R R10 T40	1.00	4.0	0.05-0.10	0.02-0.20
20	**GR20 R R12 T50**	1.25	6.0	0.05-0.10	0.02-0.20
	GR20 R R15 T60	1.50	6.0	0.05-0.10	0.02-0.20

	K20	BLU
P		●
M	●	●
K	●	○
N	●	
S	●	●
H		≤45 HRc

For L.H, specify GR19 L instead of GR19 R

● First choice ○ Alternative

Parting Off

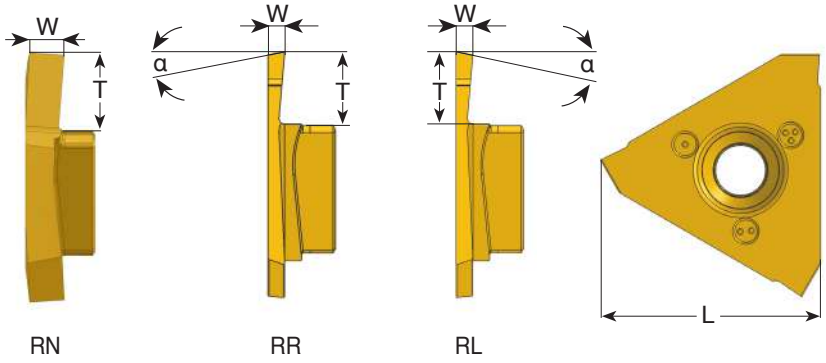

RN RR RL

Right Version

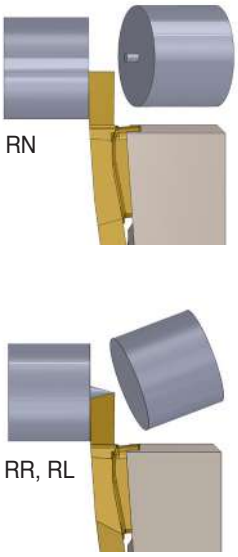

Right hand cutting

Insert Size L	Ordering Code	W	α°	T max	Feed mm/rev Radial
19	GP19 RR W10 T54	1.0	15	5.4	0.02-0.09
	GP19 RL W10 T54	1.0	15	5.4	
	GP19 RN W10 T54	1.0	0	5.4	
	GP19 RR W12 T54	1.2	15	5.4	0.02-0.09
	GP19 RL W12 T54	1.2	15	5.4	
	GP19 RN W12 T54	1.2	0	5.4	
20	GP20 RR W15 T64	1.5	15	6.4	0.04-0.10
	GP20 RL W15 T64	1.5	15	6.4	
	GP20 RN W15 T64	1.5	0	6.4	
	GP20 RR W18 T64	1.8	15	6.4	0.04-0.10
	GP20 RL W18 T64	1.8	15	6.4	
	GP20 RN W18 T64	1.8	0	6.4	
	GP20 RR W20 T64	2.0	15	6.4	0.05-0.12
	GP20 RL W20 T64	2.0	15	6.4	
	GP20 RN W20 T64	2.0	0	6.4	
	GP20 RR W25 T64	2.5	15	6.4	0.05-0.12
	GP20 RL W25 T64	2.5	15	6.4	
	GP20 RN W25 T64	2.5	0	6.4	
	GP20 RR W30 T64	3.0	15	6.4	0.05-0.12
	GP20 RL W30 T64	3.0	15	6.4	
	GP20 RN W30 T64	3.0	0	6.4	

	K20	BLU
P		●
M	●	●
K	●	○
N	●	
S	●	●
H		≤45 HRc

For L.H, specify GP19 LR instead of GP19 RR
GP19 LL instead of GP19 RL
GP19 LN instead of GP19 RN

● First choice ○ Alternative

Back Turning

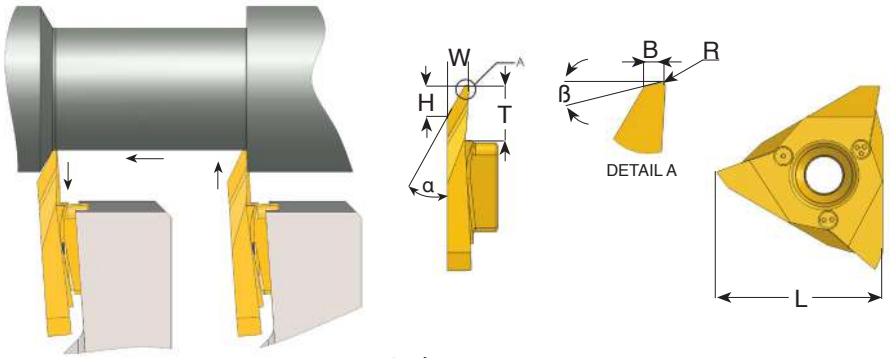

Right Version

Right hand cutting

Insert Size L	Ordering Code	α°	ß°	R	W	H	B	T max	Feed mm/rev
19	**GB19 R A30**	30	12	0.1	3.4	4.3	0.5	5.4	0.05-0.15
20	**GB20 R A30**	30	12	0.1	3.4	4.3	0.5	6.4	0.05-0.15

For L.H, specify GB19 L instead of GB19 R

	K20	BLU
P		●
M	●	●
K	●	○
N	●	
S	●	●
H		≤45 HRc

Front Turning

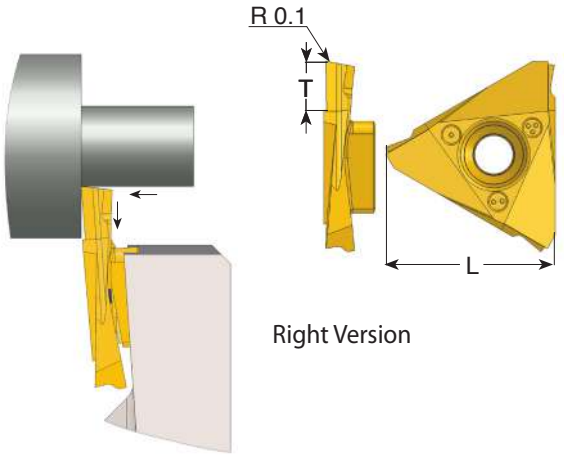

Right Version

Right hand cutting

Insert Size L	Ordering Code	T max	Feed mm/rev
19	**GF19 R T54**	5.4	0.05-0.15
20	**GF20 R T64**	6.4	0.05-0.15

For L.H, specify GF19 L instead of GF19 R

	K20	BLU
P		●
M	●	●
K	●	○
N	●	
S	●	●
H		≤45 HRc

● First choice ○ Alternative

Threading - Partial Profile 60°

External Thread

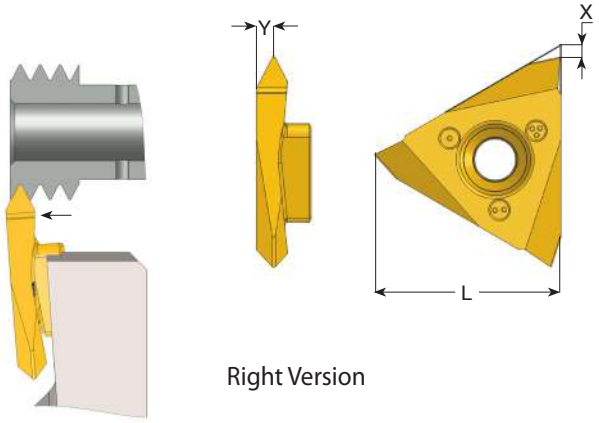

Right Version

Right hand cutting

Insert Size L	mm	TPI	Ordering Code	X	Y
19	0.5-1.5	48-16	**GT19 R A60**	2.8	1.1
	1.75-3.0	14-8	**GT19 R G60**	2.8	1.7
	0.5-3.0	48-8	**GT19 R AG60**	2.8	1.7

For L.H, specify GT19 L instead of GT19 R

	K20	BLU
P		●
M	●	●
K	●	○
N	●	
S	●	●
H		≤45 HRc

Threading - Partial Profile 55°

External Thread

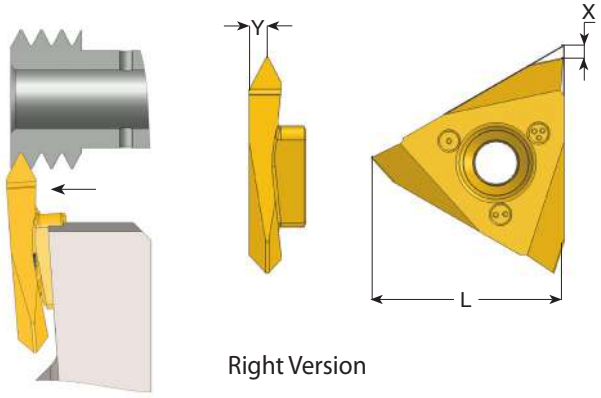

Right Version

Right hand cutting

Insert Size L	mm	TPI	Ordering Code	X	Y
19	0.5-1.5	48-16	**GT19 R A55**	2.8	1.0
	1.75-3.0	14-8	**GT19 R G55**	2.8	1.7
	0.5-3.0	48-8	**GT19 R AG55**	2.8	1.7

For L.H, specify GT19 L instead of GT19 R

	K20	BLU
P		●
M	●	●
K	●	○
N	●	
S	●	●
H		≤45 HRc

● First choice ○ Alternative

Threading - ISO metric 60° Full Profile

External Thread

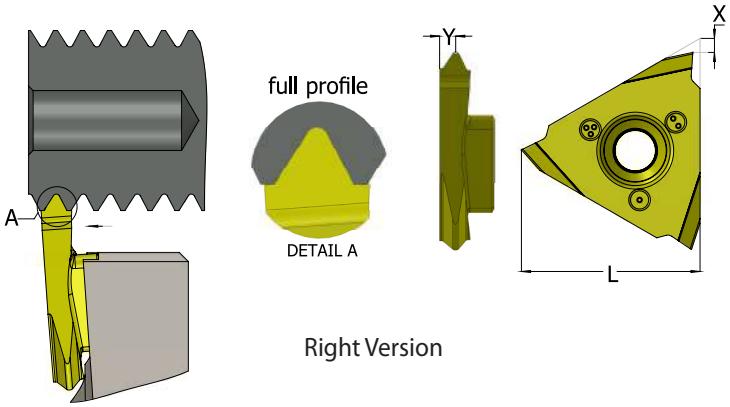

Right Version

Right hand cutting

Insert Size L	mm	Ordering Code	X	Y
19	0.5	**GT19 R 0.5 ISO**	2.8	0.6
	0.7	**GT19 R 0.7 ISO**	2.8	0.7
	0.75	**GT19 R 0.75 ISO**	2.8	0.7
	0.8	**GT19 R 0.8 ISO**	2.8	0.7
	1.0	**GT19 R 1.0 ISO**	2.8	0.8
	1.25	**GT19 R 1.25 ISO**	2.8	1.0
	1.5	**GT19 R 1.5 ISO**	2.8	1.1
	1.75	**GT19 R 1.75 ISO**	2.8	1.3

	K20	BLU
P		●
M	●	●
K	●	○
N	●	
S	●	●
H		≤45 HRc

For L.H, specify GT19 L instead of GT19 R

Threading - UN unified 60° Full Profile

External Thread

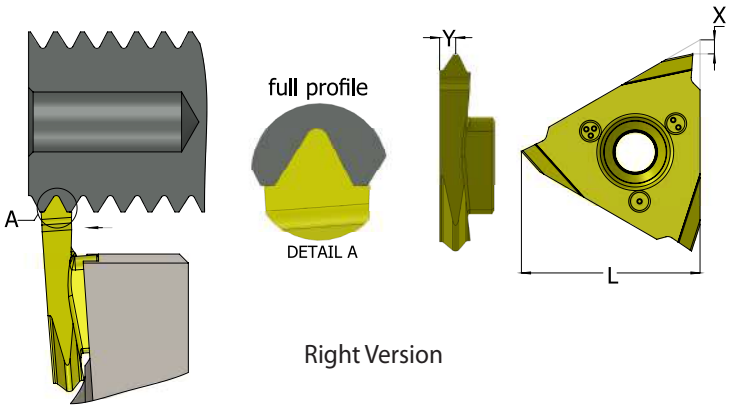

Right Version

Right hand cutting

Insert Size L	TPI	Ordering Code	X	Y
19	72	**GT19 R 72UN**	2.8	0.4
	56	**GT19 R 56UN**	2.8	0.6
	40	**GT19 R 40UN**	2.8	0.7
	32	**GT19 R 32UN**	2.8	0.7
	24	**GT19 R 24UN**	2.8	0.8
	20	**GT19 R 20UN**	2.8	1.0

	K20	BLU
P		●
M	●	●
K	●	○
N	●	
S	●	●
H		≤45 HRc

For L.H, specify GT19 L instead of GT19 R

● First choice ○ Alternative

External Toolholders

Product Identification - Ordering Codes

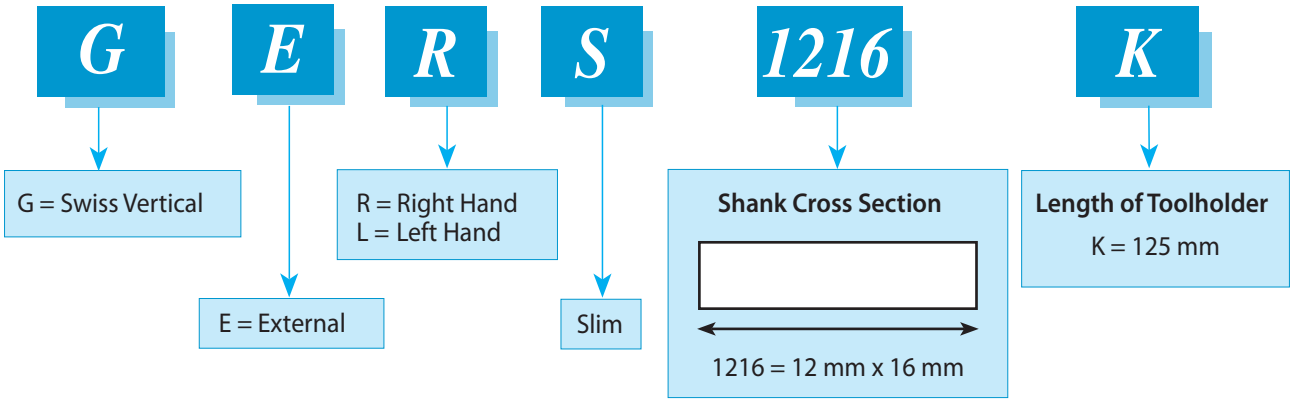

- **Coolant through toolholders, for external turning in Swiss type lathes machines.**
- **The high pressure coolant is directed towards the insert cutting edge, in order to evacuate the chips created and avoid build up edge.**
- **Includes a coolant connector for fast attachment on the machine.**

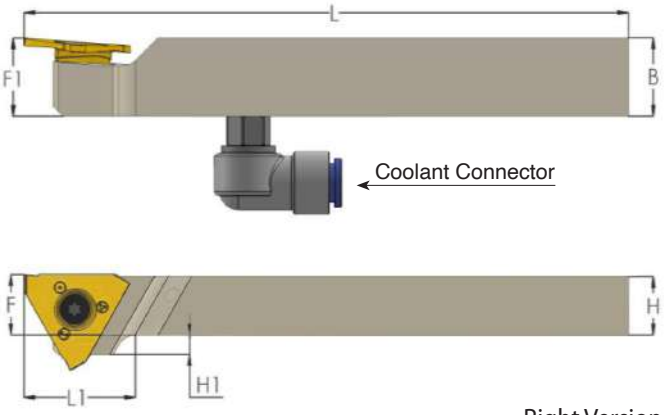



Right Version

Right hand cutting

Ordering Code	B	H	L1	L	F	F1	H1	Insert Screw	Torx Key	*Coolant connector
**GER 0816 K	16	8	17	125	8	16	8	S21	K21	-
GER 1016 K	16	10	17	125	10	16	6	S21	K21	Ø4 / Ø6
GER 1216 K	16	12	17	125	12	16	4	S21	K21	Ø4 / Ø6
GER 1616 K	16	16	-	125	16	16	0	S21	K21	Ø4 / Ø6
GER 2020 K	20	20	-	125	20	20	0	S21	K21	Ø4 / Ø6
GER 2525 M	25	25	-	150	25	25	0	S21	K21	Ø4 / Ø6

For L.H, specify GE L instead of GE R
* Coolant pipe diameter
** Without coolant

Slim Holders

For cut off, when using sub-spindle

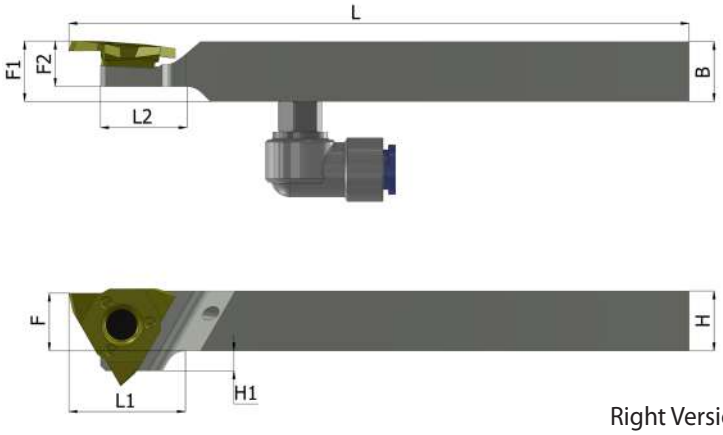



Right Version

Right hand cutting

Ordering Code	B=H	L1	L2	L	F	F1	F2	H1	Insert Screw	Torx Key	*Coolant connector
GERS 1010 K	10	17	11	125	10	10	10.0	6	S21XS	K21	Ø4 / Ø6
GERS 1212 K	12	17	11	125	12	12	9.5	4	S21XS	K21	Ø4 / Ø6
GERS 1616 K	16	-	11	125	16	16	9.5	0	S21XS	K21	Ø4 / Ø6
GERS 2020 K	20	-	11	125	20	20	9.5	0	S21XS	K21	Ø4 / Ø6

For L.H, specify GELS instead of GERS

* Coolant pipe diameter

Working Method

Grooving - Parting Off - Turning - Profiling - Threading

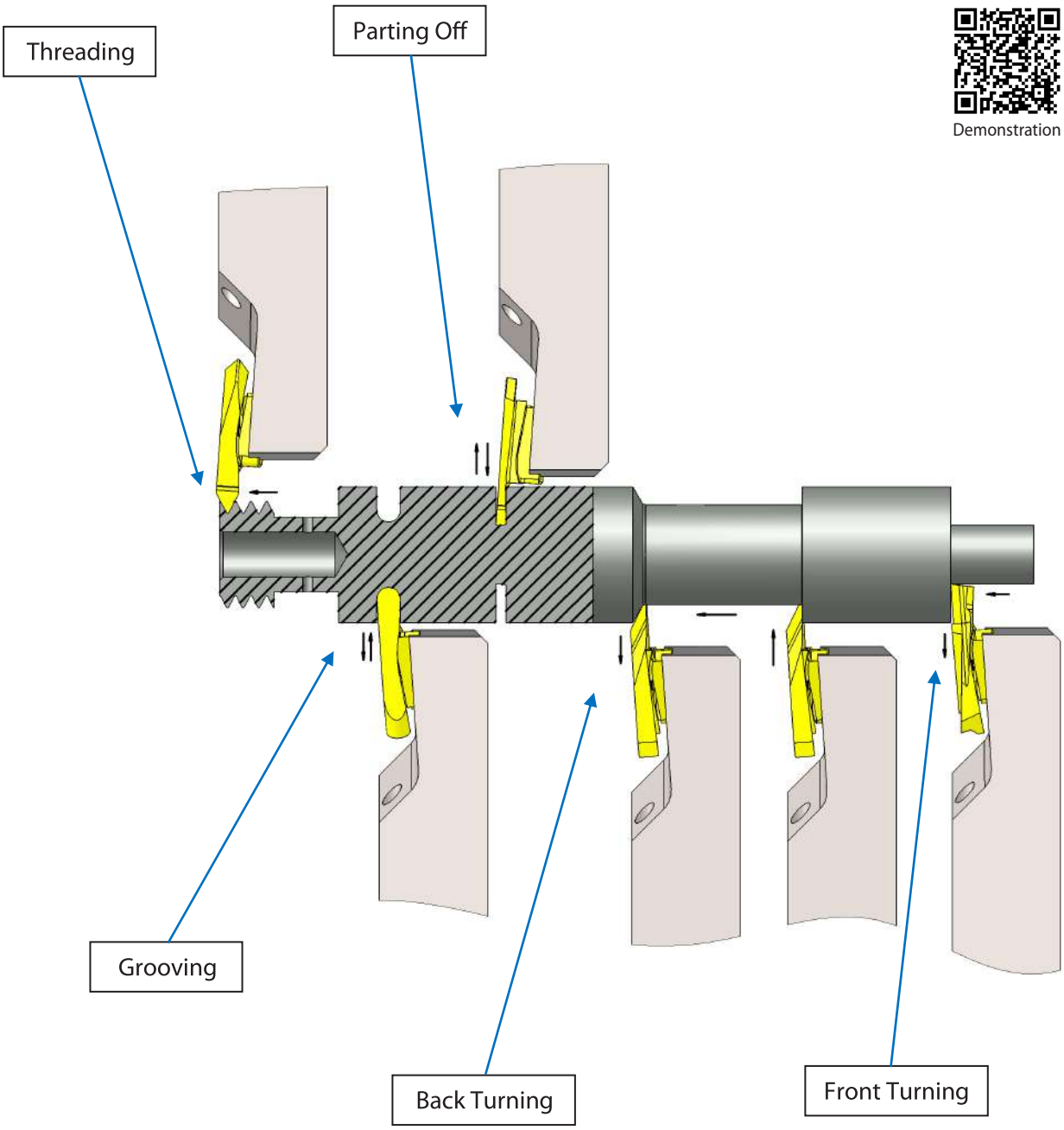

3 Cutting Edges Swiss Line Inserts (19,20 mm)

Carbide Grades

BLU

PVD triple layer coated Sub-Micron grade for Steel, Stainless Steels, Titanium and hard materials.

K20

Uncoated Sub-Micron carbide grade for Aluminum and non-ferrous materials, Stainless Steels and Titanium.

Cutting Data

ISO Standard	Materials	Cutting Speed m/min	
		K20	BLU
P	Low & Medium Carbon Steels <0.55%C	-	80-150
	High Carbon Steels ≥0.55%C	-	70-120
	Alloy Steels, Treated Steels	-	40-80
M	Stainless Steel-Free Cutting	30-80	60-120
	Stainless Steel-Austenitic	20-70	30-90
	Cast Steels	30-80	50-120
K	Cast Iron	50-120	-
N	Aluminum ≤12%Si, Copper	120-250	-
	Aluminum >12%Si	90-200	-
	Synthetics, Duroplastics, Thermoplastics	70-150	-
S	Nickel Alloys, Titanium Alloys	20-50	30-70
H	Hardened Steel, 45-50HRc	-	20-50

4 Cutting Edges G4 Turning Insert and Toolholders

For grooving, parting-off and threading applications

Benefits

- High productivity and cost efficient due to four cutting edges
- High precision thanks to the fully ground profile

Features

- Strong and stable clamping due to unique insert shape and holder pocket.
- High repeatability.
- Maximum versatility - a single holder for large range of inserts.
- Can be used with high machining parameters, and provides high surface finish.
- Internal coolant provides the coolant liquid towards the cutting edge.

Application

- Multi-function inserts for grooving, parting, turning and threading.
- Fits to a large range of diameters, from very small applications with a thin wall up to 100 mm diameter.

Carbide grades: BLU, K20

Product Identification - Ordering Codes

G4 Inserts

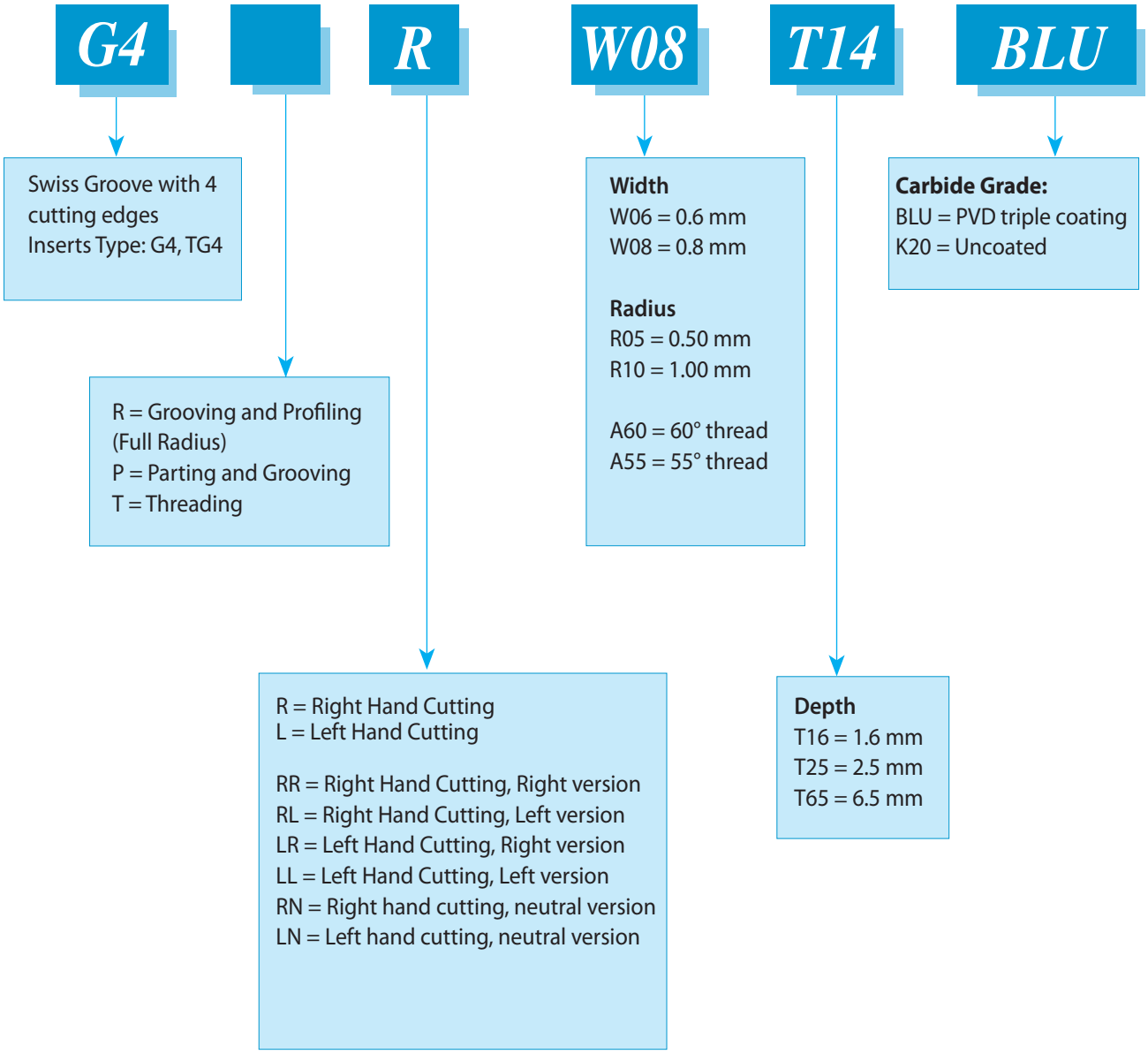

Grooving

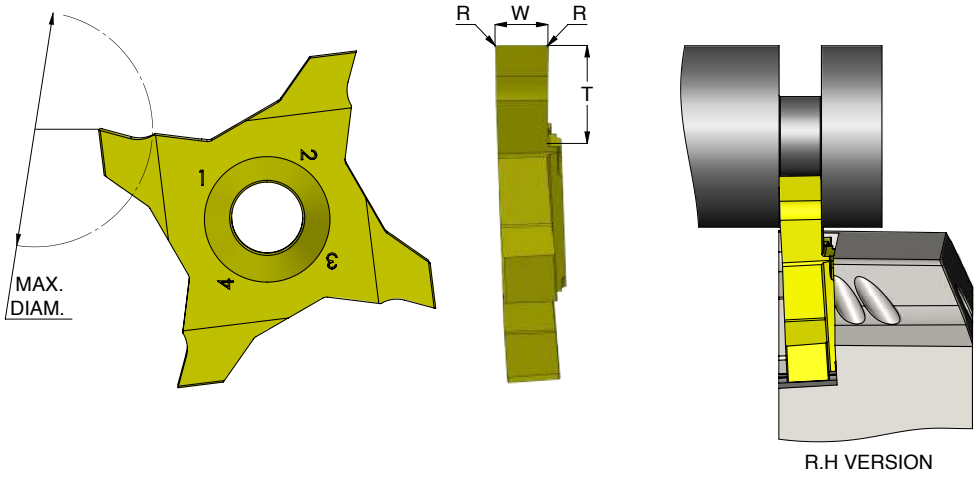

Insert Type	Ordering Code	W±0.02	T max	R	max DIAM.	Feed mm/rev
G4	**G4 R W05 T16**	0.5	1.6	0	100	0.01-0.06
	G4 R W06 T16	0.6	1.6	0	100	0.01-0.06
	G4 R W07 T18	0.7	1.8	0	100	0.01-0.06
	G4 R W08 T20	0.8	2.0	0	100	0.02-0.07
	G4 R W10 T25	1.0	2.5	0.05	100	0.02-0.09
	G4 R W12 T30	1.2	3.0	0.05	100	0.02-0.09
	G4 R W14 T30	1.4	3.0	0.05	100	0.02-0.12
	G4 R W15 T30	1.5	3.0	0.05	100	0.02-0.12
	G4 R W16 T35	1.6	3.5	0.05	100	0.02-0.12
	G4 R W17 T40	1.7	4.0	0.05	100	0.02-0.12
	G4 R W20 T40	2.0	4.0	0.05	100	0.02-0.13
TG4	**TG4 R W22 T50**	2.25	5.0	0.05	100	0.02-0.14
	TG4 R W25 T50	2.5	5.0	0.05	100	0.02-0.14
	TG4 R W27 T55	2.75	5.5	0.05	100	0.02-0.12
	TG4 R W30 T65	3.0	6.5	0.10	100	0.02-0.12
	TG4 R W32 T65	3.18	6.5	0.10	100	0.02-0.12
	TG4 R W35 T65	3.5	6.5	0.10	100	0.02-0.12

	K20	BLU
P		●
M	●	●
K	●	○
N	●	
S	●	●
H		≤45 HRc

For L.H, specify G4 L instead of G4 R

Grooving and Profiling (full radius)

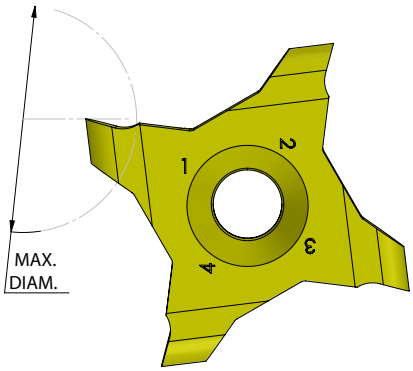

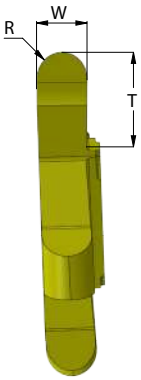

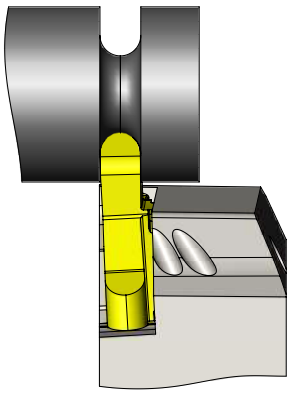

R.H VERSION

Insert Type	Ordering Code	R±0.03	W	T max	max DIAM.	Feed mm/rev
G4	**G4R R R02 T15**	0.25	0.5	1.5	100	0.01-0.06
	G4R R R04 T20	0.40	0.8	2.0	100	0.01-0.06
	G4R R R05 T25	0.50	1.0	2.5	100	0.02-0.09
	G4R R R07 T38	0.75	1.5	3.8	100	0.02-0.09
	G4R R R10 T45	1.00	2.0	4.5	100	0.02-0.13
TG4	**TG4R R R12 T50**	1.25	2.5	5.0	100	0.02-0.13
	TG4R R R15 T65	1.50	3.0	6.5	100	0.02-0.12

	K20	BLU
P		●
M	●	●
K	●	○
N	●	
S	●	●
H		≤45 HRc

For L.H, specify TG4R L instead of TG4R R

Parting Off and Grooving

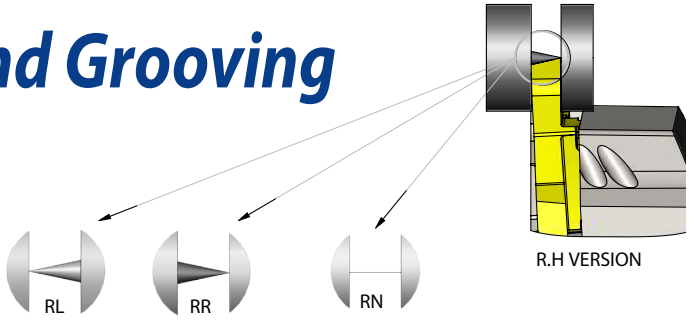

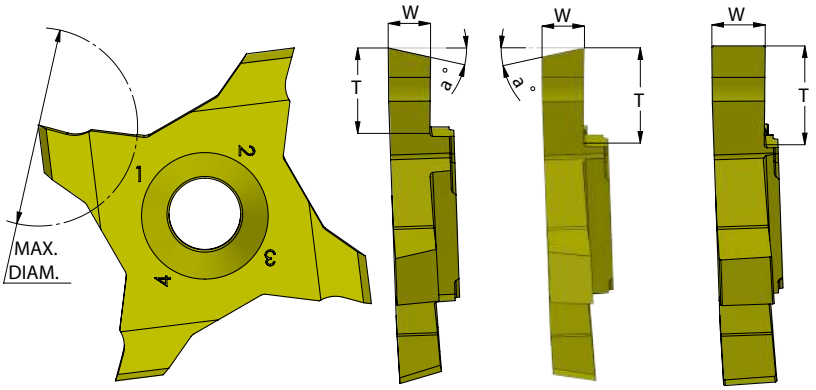

Insert Type	Ordering Code	W	α°	T max	max DIAM. Parting off	max DIAM. Grooving	Feed mm/rev
G4	G4P RR W05 T30	0.5	15	3.0	6.0	100	0.02-0.06
	G4P RL W05 T30	0.5	15	3.0	6.0	100	0.02-0.06
	G4P RN W05 T30	0.5	0	3.0	6.0	100	0.02-0.06
	G4P RR W07 T43	0.7	15	4.3	8.0	100	0.02-0.09
	G4P RL W07 T43	0.7	15	4.3	8.0	100	0.02-0.09
	G4P RN W07 T43	0.7	0	4.3	8.0	100	0.02-0.09
	G4P RR W08 T45	0.8	15	4.5	9.0	100	0.02-0.09
	G4P RL W08 T45	0.8	15	4.5	9.0	100	0.02-0.09
	G4P RN W08 T45	0.8	0	4.5	9.0	100	0.02-0.09
TG4	TG4P RR W10 T58	1.0	15	5.8	11.6	100	0.02-0.09
	TG4P RL W10 T58	1.0	15	5.8	11.6	100	0.02-0.09
	TG4P RN W10 T58	1.0	0	5.8	11.6	100	0.02-0.09
	TG4P RR W15 T65	1.5	15	6.5	13.0	100	0.02-0.13
	TG4P RL W15 T65	1.5	15	6.5	13.0	100	0.02-0.13
	TG4P RN W15 T65	1.5	0	6.5	13.0	100	0.02-0.13
	TG4P RR W20 T65	2.0	15	6.5	13.0	100	0.02-0.13
	TG4P RL W20 T65	2.0	15	6.5	13.0	100	0.02-0.13
	TG4P RN W20 T65	2.0	0	6.5	13.0	100	0.02-0.13
	TG4P RR W25 T65	2.5	15	6.5	13.0	100	0.02-0.13
	TG4P RL W25 T65	2.5	15	6.5	13.0	100	0.02-0.13
	TG4P RN W25 T65	2.5	0	6.5	13.0	100	0.02-0.13

	K20	BLU
P		●
M	●	●
K	●	○
N	●	
S	●	●
H		≤45 HRc

For L.H, specify G4P LR instead of G4P RR
For L.H, specify G4P LL instead of G4P RL
For L.H, specify G4P LN instead of G4P RN

Threading-Partial profile 60°

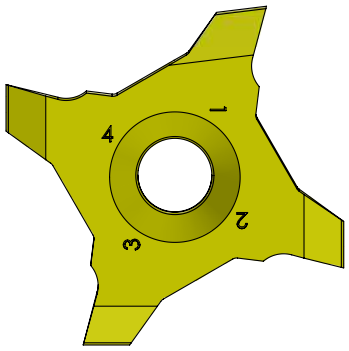



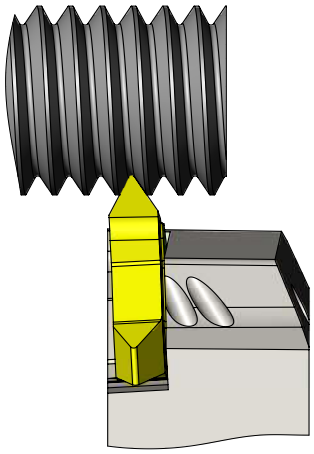

R.H VERSION

Insert Type	Ordering Code	Pitch		Y
		mm	TPI	
G4	**G4T R AF60**	0.25-0.8	100-32	0.7
	G4T R A60	0.5-1.5	46-16	1.1
	G4T R G60	1.75-3.0	14-8	1.8
	G4T R AG60	0.5-3.0	48-8	1.8

	K20	BLU
P		●
M	●	●
K	●	○
N	●	
S	●	●
H		≤45 HRc

For L.H, specify G4T L instead of G4T R

Threading-Partial profile 55°

Insert Type	Ordering Code	Pitch		Y
		mm	TPI	
G4	**G4T R A55**	0.5-1.5	46-16	1.1
	G4T R G55	1.75-3.0	14-8	1.8
	G4T R AG55	0.5-3.0	48-8	1.8

For L.H, specify G4T L instead of G4T R

Threading - ISO metric 60° Full Profile

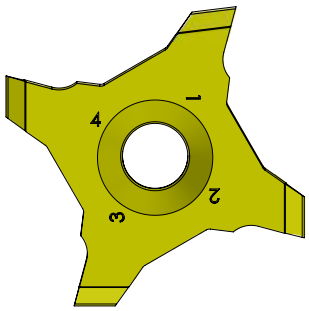



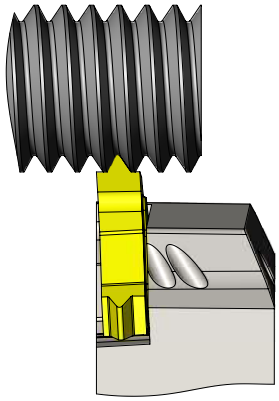

R.H VERSION

Insert Type	Ordering Code	Pitch mm	Y
G4	G4T R 0.5 ISO	0.5	0.6
	G4T R 0.6 ISO	0.6	0.6
	G4T R 0.7 ISO	0.7	0.7
	G4T R 0.75 ISO	0.75	0.7
	G4T R 0.8 ISO	0.8	0.7
	G4T R 1.0 ISO	1.0	0.8
	G4T R 1.25 ISO	1.25	1.0
	G4T R 1.5 ISO	1.5	1.1
TG4	TG4T R 1.75 ISO	1.75	1.2
	TG4T R 2.0 ISO	2.0	1.3
	TG4T R 3.0 ISO	3.0	1.7

	K20	BLU
P		●
M	●	●
K	●	○
N	●	
S	●	●
H		≤45 HRc

For L.H, specify G4T L instead of G4T R

Threading-UN unified 60° Full Profile

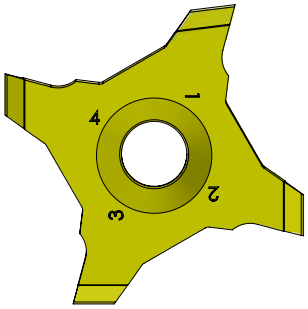



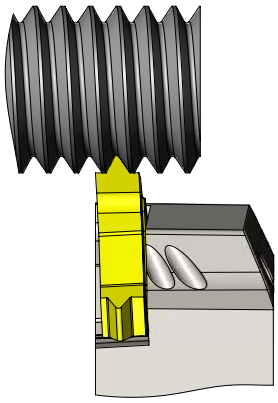
R.H VERSION

Insert Type	Ordering Code	Pitch TPI	Y
G4	G4T R 72 UN	72	0.3
	G4T R 64 UN	64	0.4
	G4T R 56 UN	56	0.6
	G4T R 40 UN	40	0.7
	G4T R 32 UN	32	0.7
	G4T R 28 UN	28	0.8
	G4T R 24 UN	24	0.8
	G4T R 20 UN	20	0.9
	G4T R 18 UN	18	1.0
TG4	TG4T R 16 UN	16	1.1
	TG4T R 14 UN	14	1.2
	TG4T R 13 UN	13	1.3
	TG4T R 12 UN	12	1.4

	K20	BLU
P		●
M	●	●
K	●	○
N	●	
S	●	●
H		≤45 HRc

For L.H, specify G4T L instead of G4T R

External Toolholders

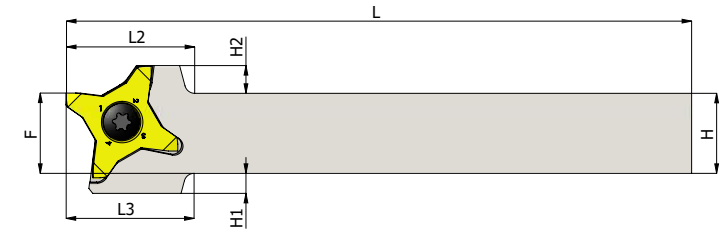





Insert Type	Ordering Code	B	H	L1	L2	L3	L	F	F1	H1	H2	Insert Screw Torx+	Key Torx+	** Coolant Connector mm
G4	***G4ER 1212 K**	12	12	4.5	18	18	125	12	12	4	4	S16P	IP10	---
	G4ER 1616 K	16	16	4.5	18	---	125	16	16	---	4	S16P	IP10	Ø4/Ø6
	G4ER 2020 K	20	20	4.5	18	---	125	20	20	---	4	S16P	IP10	Ø4/Ø6
	G4ER 2525 M	25	25	4.5	18	---	150	25	25	---	4	S16P	IP10	Ø4/Ø6
TG4	**TG4ER 1616 K**	16	16	6.5	26	26	125	16	16	4	6	S22P	IP20	Ø4/Ø6
	TG4ER 2020 K	20	20	6.5	26	---	125	20	20	---	6	S22P	IP20	Ø4/Ø6
	TG4ER 2525 M	25	25	6.5	26	---	150	25	25	---	6	S22P	IP20	Ø4/Ø6

* Without internal coolant
** Diameter of coolant pipe (Default Ø4)
For L.H, specify G4EL… instead of G4ER…
specify TG4EL… instead of TG4ER…
Coated holders provide a high abrasive resistance

Carbide Grades

BLU PVD triple layer coated Sub-Micron grade for Steel, Stainless Steels, Super Alloys and hard materials up to 45 HRc.

K20 Uncoated Sub-Micron carbide grade for Aluminum and non-ferrous materials, Stainless Steels and Titanium.

Cutting Data

ISO Standard	Materials	Cutting Speed m/min	
		K20	BLU
P	Low & Medium Carbon Steels <0.55%C	-	80-150
	High Carbon Steels ≥0.55%C	-	70-120
	Alloy Steels, Treated Steels	-	40-80
M	Stainless Steel-Free Cutting	30-80	60-120
	Stainless Steel-Austenitic	20-70	30-90
	Cast Steels	30-80	50-120
K	Cast Iron	50-120	60-130
N	Aluminum ≤12%Si, Copper	120-250	-
	Aluminum >12%Si	90-200	-
	Synthetics, Duroplastics, Thermoplastics	70-150	-
S	Nickel Alloys, Titanium Alloys	20-50	30-70
H	Hardened Steel, ≤45HRc	-	20-50

6 Cutting Edges G6 Turning Inserts and Toolholders

For grooving, parting-off and threading

Benefits

- High productivity and cost efficiency due to six cutting edges
- One holder for all insert types - Maximum versatility
- High precision thanks to the fully ground profile



Features

- Strong and stable clamping due to the unique insert shape
- Can be used with high machining parameters, and provides high surface finish
- Internal coolant provides the coolant liquid towards the cutting edge

Application

- Multi-function inserts for grooving, parting, turning and threading
- Fits a large range of diameters from very small applications with a thin wall up to 60 mm diameter

Carbide grades: BLU, K20

Demonstration

Product Identification - Ordering Codes

G6 Inserts

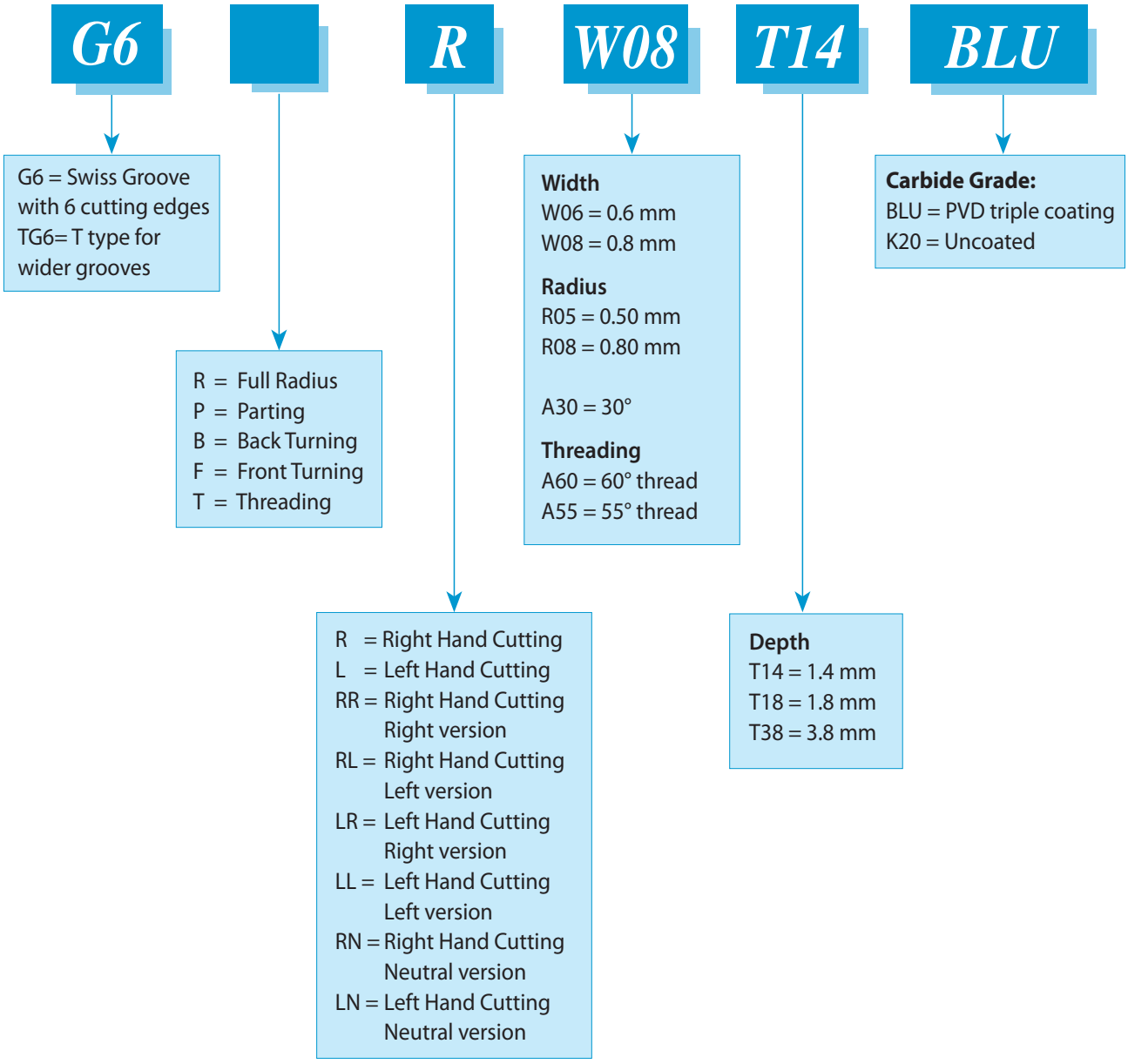

Grooving

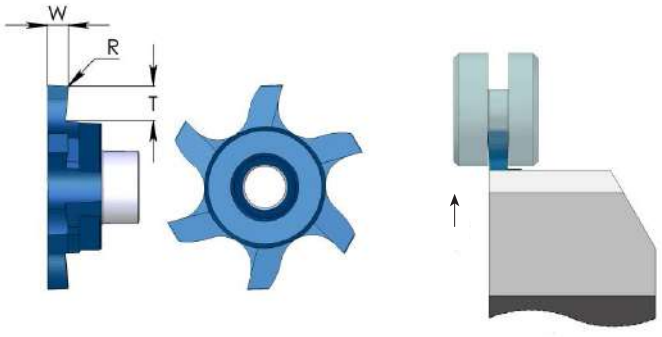

Right Version

Right hand cutting

Insert Type	Ordering Code	W±0.02	T max	R	Feed mm/rev
G6	**G6 R W06 T11**	0.6	1.1	0	0.01-0.06
	G6 R W08 T14	0.8	1.4	0	0.02-0.07
	G6 R W10 T18	1.0	1.8	0.05	0.02-0.09
	G6 R W15 T33	1.5	3.3	0.05	0.02-0.12
	G6 R W20 T38	2.0	3.8	0.10	0.02-0.13
	G6 R W25 T38	2.5	3.8	0.10	0.02-0.14
TG6	**TG6 R W30 T38**	3.0	3.8	0.10	0.02-0.12
	TG6 R W40 T38	4.0	3.8	0.10	0.02-0.12

	K20	BLU
P		●
M	●	●
K	●	○
N	●	
S	●	●
H		≤45 HRc

For L.H, specify G6 L instead of G6 R

● First choice ○ Alternative

Grooving, Circlip Ring Grooves
DIN 471/472

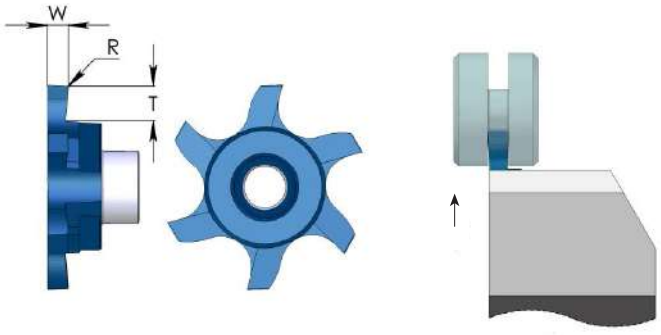

Right Version

Right hand cutting

Insert Type	Ordering Code	Nom` groove width	W-0.05	T max	R	Feed mm/rev
G6	**G6D R W12 T31**	1.10	1.24	3.1	0.05	0.02-0.09
	G6D R W14 T33	1.30	1.44	3.3	0.05	0.02-0.12
	G6D R W17 T33	1.60	1.74	3.3	0.05	0.02-0.12

	K20	BLU
P		●
M	●	●
K	●	○
N	●	
S	●	●
H		≤45 HRc

For L.H, specify G6D L instead of G6D R

Nom`= nominal

Grooving and Profiling (full radius)

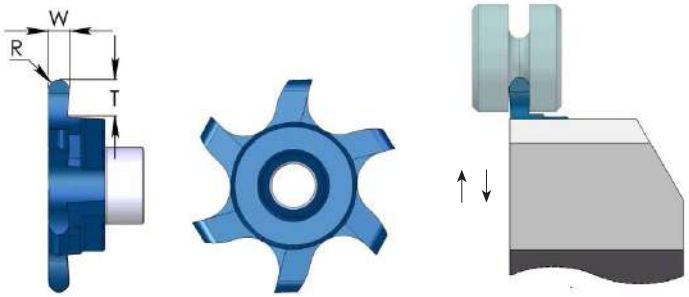

Right Version

Right hand cutting

Insert Type	Ordering Code	R±0.03	W	T max	Feed mm/rev
G6	**G6R R R05 T25**	0.50	1.0	2.5	0.02-0.09
	G6R R R08 T30	0.80	1.6	3.0	0.02-0.09
	G6R R R10 T38	1.00	2.0	3.8	0.02-0.13
	G6R R R12 T38	1.25	2.5	3.8	0.02-0.14
TG6	**TG6R R R15 T38**	1.5	3.0	3.8	0.02-0.12
	TG6R R R20 T38	2.0	4.0	3.8	0.02-0.12

	K20	BLU
P		●
M	●	●
K	●	○
N	●	
S	●	●
H		≤45 HRc

For L.H, specify G6R L instead of G6R R

● First choice ○ Alternative

Parting Off and Grooving

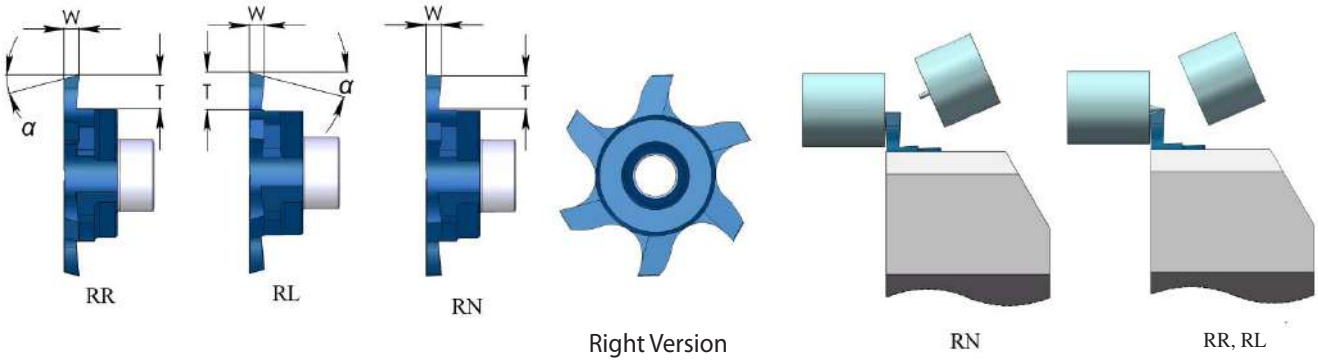

Right hand cutting

Insert Type	Ordering Code	W	α°	T max	Feed mm/rev
G6	**G6P RR W08 T38**	0.8	15	3.8	0.02-0.09
	G6P RL W08 T38	0.8	15	3.8	0.02-0.09
	G6P RN W08 T38	0.8	0	3.8	0.02-0.09
	G6P RR W10 T38	1.0	15	3.8	0.02-0.09
	G6P RL W10 T38	1.0	15	3.8	0.02-0.09
	G6P RN W10 T38	1.0	0	3.8	0.02-0.09
	G6P RR W15 T38	1.5	15	3.8	0.02-0.13
	G6P RL W15 T38	1.5	15	3.8	0.02-0.13
	G6P RN W15 T38	1.5	0	3.8	0.02-0.13
	G6P RR W20 T38	2.0	15	3.8	0.02-0.13
	G6P RL W20 T38	2.0	15	3.8	0.02-0.13
	G6P RN W20 T38	2.0	0	3.8	0.02-0.13

	K20	BLU
P		●
M	●	●
K	●	○
N	●	
S	●	●
H		≤45 HRc

For L.H, specify G6P LR instead of G6P RR
G6P LL instead of G6P RL
G6P LN instead of G6P RN

● First choice ○ Alternative

Back Turning

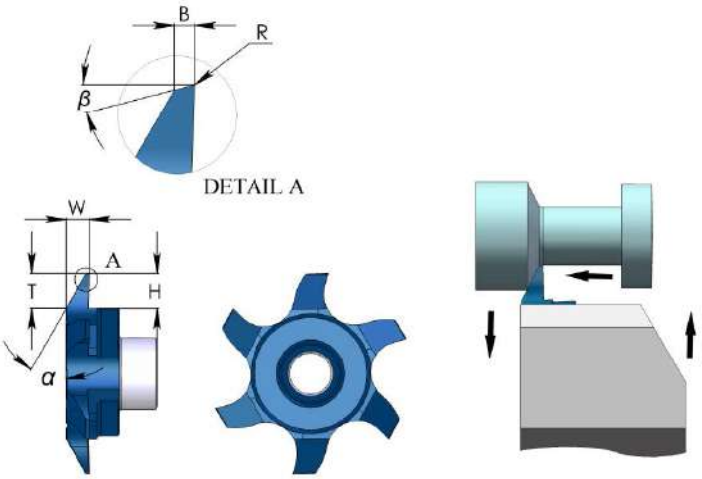

Right Version

Right hand cutting

Insert Type	Ordering Code	α°	ß°	R	W	H	B	T max	Feed mm/rev
G6	**G6B R A30**	30	12	0.1	2.6	3.8	0.5	3.8	0.05-0.12

For L.H, specify G6B L instead of G6B R

	K20	BLU
P		●
M	●	●
K	●	○
N	●	
S	●	●
H		≤45 HRc

Front Turning

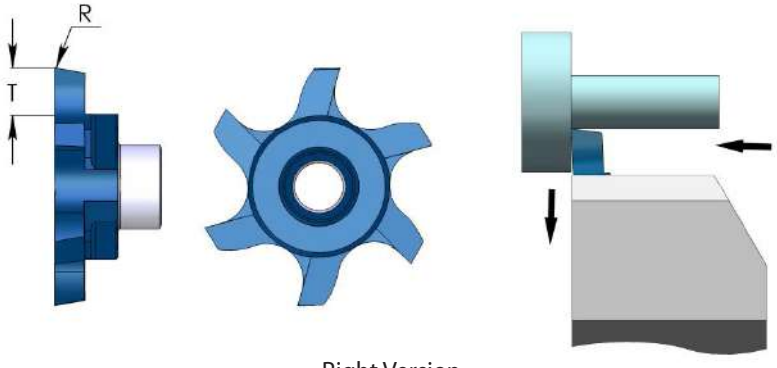

Right Version

Right hand cutting

Insert Type	Ordering Code	T max	R	Feed mm/rev
G6	**G6F R T38**	3.8	0.1	0.05-0.12

For L.H, specify G6F L instead of G6F R

	K20	BLU
P		●
M	●	●
K	●	○
N	●	
S	●	●
H		≤45 HRc

● First choice ○ Alternative

Threading - Partial Profile 60°

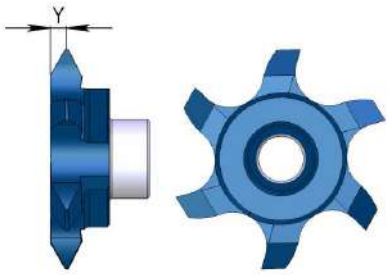

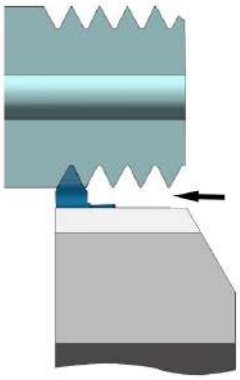

Right Version

Right hand cutting

Insert Type	Ordering Code	Pitch Range mm	Pitch Range TPI	Y
G6	**G6T R A60**	0.5-1.5	48-16	0.8
	G6T R G60	1.75-3.0	14-8	1.5
	G6T R AG60	0.5-3.0	48-8	1.5

For L.H, specify G6T L instead of G6T R

	K20	BLU
P		●
M	●	●
K	●	○
N	●	
S	●	●
H		≤45 HRc

Threading - Partial Profile 55°

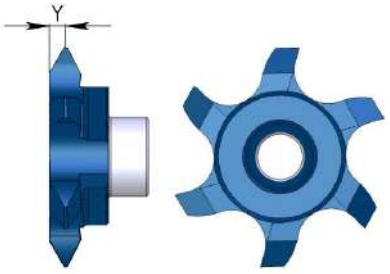

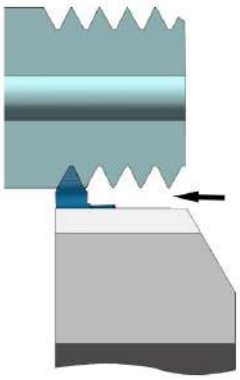

Right Version

Right hand cutting

Insert Type	Ordering Code	Pitch Range mm	Pitch Range TPI	Y
G6	**G6T R A55**	0.5-1.5	48-16	0.8
	G6T R G55	1.75-3.0	14-8	1.5
	G6T R AG55	0.5-3.0	48-8	1.5

For L.H, specify G6T L instead of G6T R

	K20	BLU
P		●
M	●	●
K	●	○
N	●	
S	●	●
H		≤45 HRc

● First choice ○ Alternative

Threading - ISO metric 60° Full Profile

External thread

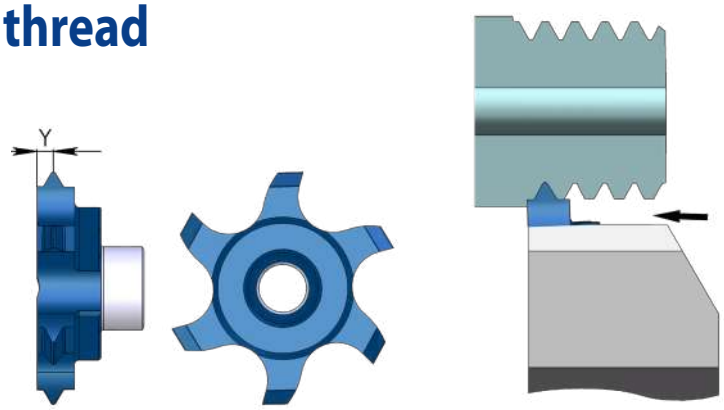

Right Version

Right hand cutting

Insert Type	Ordering Code	Pitch mm	Y
G6	**G6T R 1.0 ISO**	1.0	0.7
	G6T R 1.5 ISO	1.5	1.0
	G6T R 2.0 ISO	2.0	1.3

For L.H, specify G6T L instead of G6T R

	K20	BLU
P		●
M	●	●
K	●	○
N	●	
S	●	●
H		≤45 HRc

Threading - UN unified 60° Full Profile

External thread

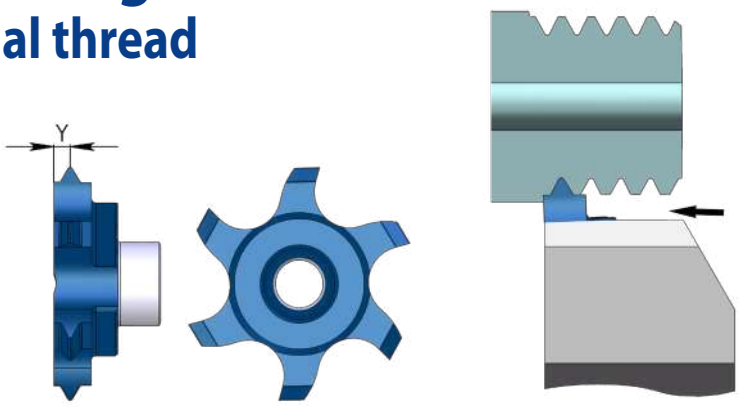

Right Version

Right hand cutting

Insert Type	Ordering Code	Pitch TPI	Y
G6	**G6T R 56 UN**	56	0.6
	G6T R 40 UN	40	0.7
	G6T R 32 UN	32	0.7
	G6T R 24 UN	24	0.7

For L.H, specify G6T L instead of G6T R

	K20	BLU
P		●
M	●	●
K	●	○
N	●	
S	●	●
H		≤45 HRc

● First choice ○ Alternative

External Toolholders - For G6 Inserts

Coolant through toolholders, for external turning in Swiss type lathes machines. The high pressure coolant is directed towards the insert cutting edge in order to evacuate the chips created and avoid build up edge.
Includes a coolant connector for fast attachment on the machine.

Product Identification - Ordering Codes

G6	T	E	R	1212	K
G6 = Swiss toolholder	T =Type	E = External	R = Right Hand L = Left Hand	Shank Cross Section 1212 = 12x12 mm	Length of Toolholders K = 125 mm M = 150 mm

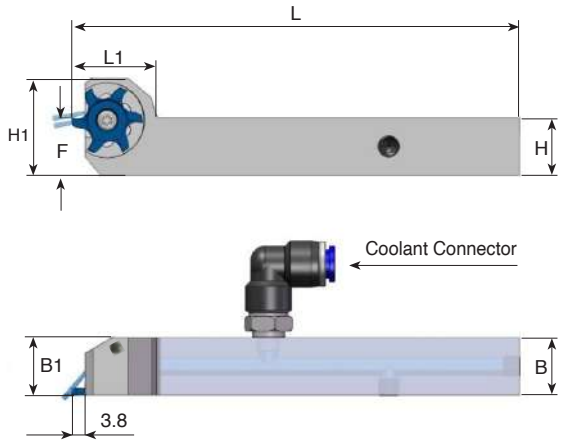



Right Version

Right hand cutting

Insert Type	Ordering Code	B	H	L1	L	H1	F	B1	Insert Screw Torx +	Torx + Key	**Coolant connector (mm)
G6	*G6ER 1212 K	12	12	20	125	23	12	16	S16LP	K16P	---
	G6ER 1616 K	16	16	20	125	27	16	16	S16LP	K16P	Ø4 / Ø6
	G6ER 2020 K	20	20	20	125	31	20	20	S16LP	K16P	Ø4 / Ø6
	G6ER 2525 M	25	25	20	150	36	25	25	S16LP	K16P	Ø4 / Ø6
TG6	*TG6ER 1212 K	12	12	20	125	23	12	18	S16LP	K16P	---
	TG6ER 1616 K	16	16	20	125	27	16	18	S16LP	K16P	Ø4 / Ø6
	TG6ER 2020 K	20	20	20	125	31	20	20	S16LP	K16P	Ø4 / Ø6
	TG6ER 2525 M	25	25	20	150	36	25	25	S16LP	K16P	Ø4 / Ø6

* Without internal coolant
** Coolant pipe diameter, standard packing with Ø4 mm
For L.H, specify G6EL instead of G6ER
Coated holders provide high abrasive resistance

G6 Inserts

Carbide Grades

BLU PVD triple layer coated Sub-Micron grade for Steel, Stainless Steels, Titanium and hard materials.

K20 Uncoated Sub-Micron carbide grade for Aluminum and non-ferrous materials, Stainless Steels and Titanium.

Cutting Data

ISO Standard	Material	Cutting Speed m/min	
		K20	BLU
P	Low and Medium Carbon Steels <0.55%C	-	80-150
	High Carbon Steels ≥0.55%C	-	70-120
	Alloy Steels,Treated Steels	-	40-80
M	Stainless Steel-Free Cutting	30-80	60-120
	Stainless Steel-Austenitic	20-70	30-90
	Cast Steels	30-80	50-120
K	Cast Iron	50-120	60-130
N	Aluminum ≤12%Si, Copper	120-250	-
	Aluminum >12%Si	90-200	-
	Synthetics, Duroplastics, Thermoplastics	70-150	-
S	Nickel Alloys, Titanium Alloys.	20-50	30-70
H	Hardened Steel, ≤45 HRc	-	20-50

Carbide Shank Turning Toolholders and Inserts

A09

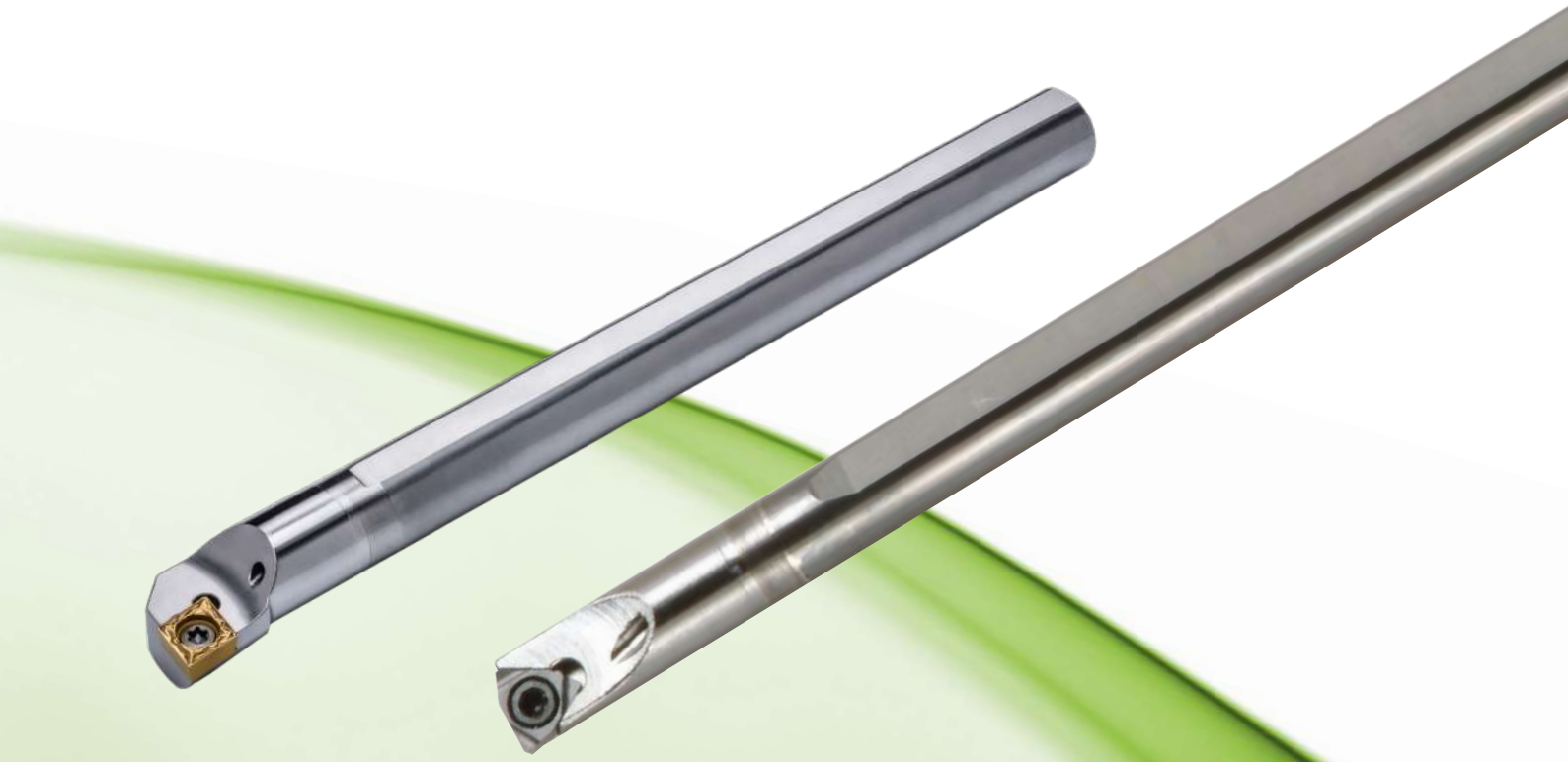

Contents:	Page:
Carbide Shank Turning Toolholder	2
Boring bar, SWUBR/L type Lead angle k= 3˚ and Inserts	2
Boring bar, SCLCR/L type Lead angle k= 5˚	3

Contents:	Page:
Boring bar, SDUCR/L type Lead angle k= 3˚	4
Boring bar, STFPR/L type Lead angle k= 1˚	5

Carbide Shank Turning Toolholder

High performance Carbide Shank turning toolholders for internal machining from 6 mm (.236”) minimum diameter and larger.

- Unique Carbide type for high rigidity
- Cylindrical shank
- Internal coolant supply to the cutting edge
- Screw clamping design

Boring bar, SWUBR/L type *Lead angle k= 3˚* and Inserts

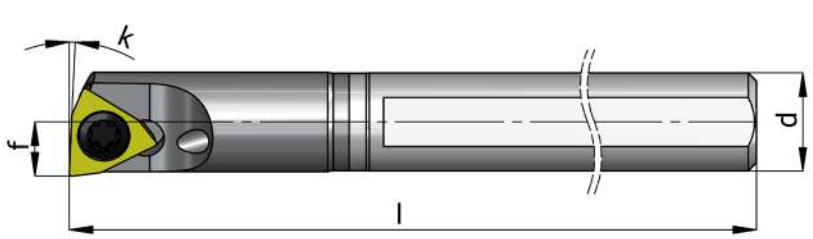

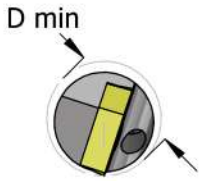

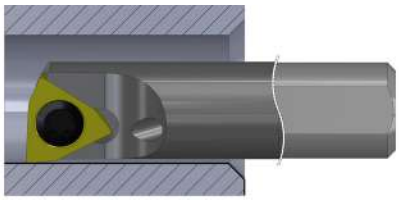

Ordering Code	R. Hand L. Hand	d	Min Bore Dia	l	f	k	Insert Screw	Torx Key	Insert
E06H SWUBR-06 *(SIR 0006 H06CT)	R	6	6.5	100	3.2	3˚	S06	K06	WBMT 06 01 02L *(06 IR TURN BMA)
E06H SWUBL-06	L	6	6.5	100	3.2	3˚	S06	K06	WBMT 06 01 02R *(06 IL TURN BMA)
E08K SWUBR-06 *(SIR 0008 K06CT)	R	8	8.6	125	4.2	3˚	S06	K06	WBMT 06 01 02L *(06 IR TURN BMA)
E08K SWUBL-06	L	8	8.6	125	4.2	3˚	S06	K06	WBMT 06 01 02R *(06 IL TURN BMA)
E10M SWUBR-06 *(SIR 0010 M06CT)	R	10	11.0	150	5.5	3˚	S06	K06	WBMT 06 01 02L *(06 IR TURN BMA)
E10M SWUBL-06	L	10	11.0	150	5.5	3˚	S06	K06	WBMT 06 01 02R *(06 IL TURN BMA)

*Old item description

Boring bar, SCLCR/L type Lead angle k= 5°

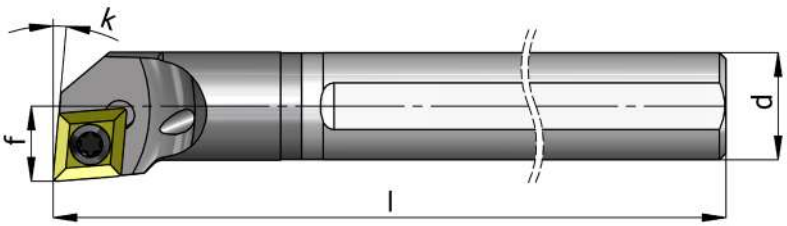

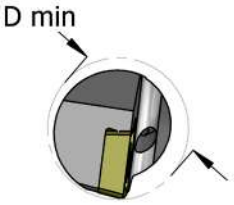

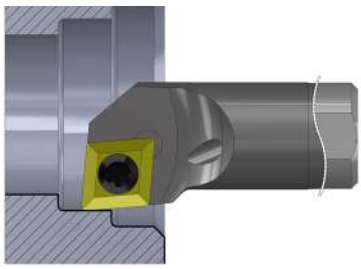

Ordering Code	R. Hand L. Hand	d	Min Bore Dia	l	f	k	Insert Screw	Torx Key	Insert*
E08K SCLCR-06	R	8	10.0	125	4.9	5°	S09	K07	CCMT 06 02 04
E08K SCLCL-06	L	8	10.0	125	4.9	5°	S09	K07	CCMT 06 02 04
E10M SCLCR-06	R	10	14.0	150	6.9	5°	S09	K07	CCMT 06 02 04
E10M SCLCL-06	L	10	14.0	150	6.9	5°	S09	K07	CCMT 06 02 04
E12P SCLCR-06	R	12	16.0	170	8.9	5°	S09	K07	CCMT 06 02 04
E12P SCLCL-06	L	12	16.0	170	8.9	5°	S09	K07	CCMT 06 02 04
E16R SCLCR-06	R	16	20.0	200	10.9	5°	S09	K07	CCMT 06 02 04
E16R SCLCL-06	L	16	20.0	200	10.9	5°	S09	K07	CCMT 06 02 04
E16R SCLCR-09	R	16	20.0	200	10.9	5°	S20	K22	CCMT 09 T3 08
E16R SCLCL-09	L	16	20.0	200	10.9	5°	S20	K22	CCMT 09 T3 08

*CPT doesn't offer the inserts

Boring bar, SDUCR/L type *Lead angle k= 3°*

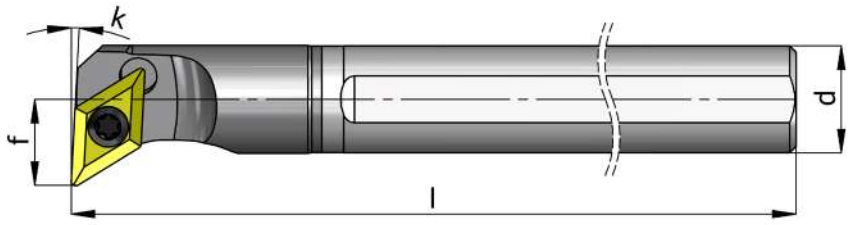

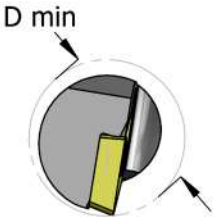

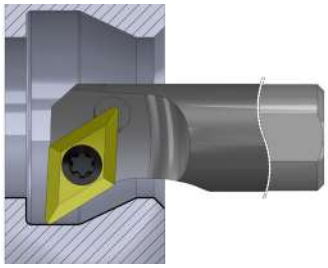

Ordering Code	R. Hand L. Hand	d	Min Bore Dia	l	f	k	Insert Screw	Torx Key	Insert*
E10M SDUCR-07	R	10	14.0	150	7.9	3°	S09	K07	DCMT 07 02 04
E10M SDUCL-07	L	10	14.0	150	7.9	3°	S09	K07	DCMT 07 02 04
E12P SDUCR-07	R	12	16.0	170	8.9	3°	S09	K07	DCMT 07 02 04
E12P SDUCL-07	L	12	16.0	170	8.9	3°	S09	K07	DCMT 07 02 04
E16R SDUCR-07	R	16	20.0	200	10.9	3°	S09	K07	DCMT 07 02 04
E16R SDUCL-07	L	16	20.0	200	10.9	3°	S09	K07	DCMT 07 02 04

*CPT doesn't offer the inserts

Boring bar, STFPR/L type *Lead angle k= 1°*

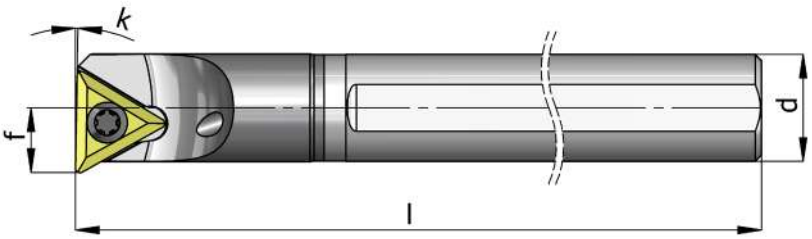

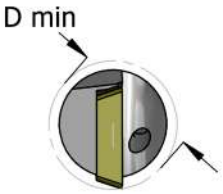

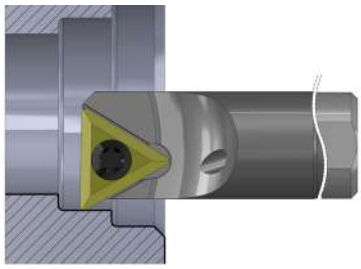

Ordering Code	R. Hand L. Hand	d	Min Bore Dia	l	f	k	Insert Screw	Torx Key	Insert*
E10M STFPR-11	R	10	11.0	150	5.9	1°	S18	K07	TPGB 11 03 04
E10M STFPL-11	L	10	11.0	150	5.9	1°	S18	K07	TPGB 11 03 04
E12P STFPR-11	R	12	14.0	170	6.9	1°	S18	K07	TPGB 11 03 04
E12P STFPL-11	L	12	14.0	170	6.9	1°	S18	K07	TPGB 11 03 04

*CPT doesn't offer the inserts



Demonstration

For Perfect Long Threads on Swiss Type Machines

- Single pass working ability reduces machining time and increases productivity
- A high accuracy Holder-Insert system along with special cutting edge geometry leads to a high quality surface finish
- Multi-Insert holders reduce cycle time and increase tool life
- Whirling toolholders consist of 6 to 8 inserts
- Whirling inserts consist of three cutting edges with high indexability
- Whirling inserts can produce single or double start threads in one pass

Contents:	Page:	Contents:	Page:
Thread Whirling Advantages	2	Case Study	4
Applications	2	Specials	4
Product Identification	3		

Thread Whirling Tools

Thread Whirling is a fast and an accurate way to thread long, small diameter parts in exotic materials such as titanium, stainless steel and inconel.
Cutting is the result of the whirling ring rotating eccentrically at high speed about the slowly rotating workpiece. The advancement of the workpiece rotationally and the advancement of the tool head longitudinally correspond to the thread pitch required.

Advantages

Thread Whirling offers several advantages over single point threading:
Enables production of small diameter long threads when used on Swiss type machines. The thread whirling spindle works close to the guide bushing for increased support and rigidity.

Increased Productivity

Thread Whirling is performed in a single pass, resulting in a shorter machining time.
This eliminates multiple passes required for a single point threading.
Thread whirling allows working at high feed rates and consequently results in short cycle times.

Very high surface quality and accurate geometry

The use of 6 to 8 cutting edges, higher concentricity, special cutting edge geometry and ideal chip removal, enable top quality surfaces to be produced without burrs.

Long tool life

Whirling inserts have a stronger cutting edge than single point tools, since cutter side clearance is achieved by rotating the whirling spindle, not by relieving material under the cutting edge.

Faster Setup

Thread whirling eliminates special support devices and expensive startup development costs.

Compensation of large helix angles

Large helix angles can be compensated by adjusting the whirling unit.

Short Delivery Time

Up to 3 weeks.

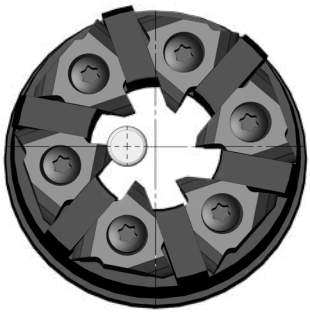

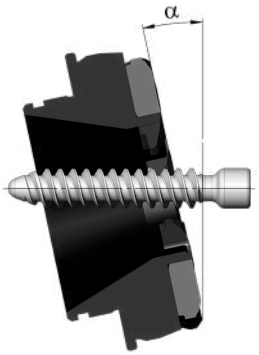

Applications

CPT supports and offers high quality Thread Whirling tools for a wide range of applications, such as: Bone screws, Dental implants, Orthopedic screws, automotive parts, semiconductor small parts, etc.

CPT holds in stock thread whirling holders that are compatible with all

Swiss Type machines such as STAR, Citizen, Tornos, Hanwha, Tsugami, Nexturn, and **Whirling units** as PCM, WTO, H&F, MADAULA, etc.

Machine details and **Whirling unit** details are needed in order to offer a suitable toolholder.

Machine		Whirling Unit	Whirling Holder Ordering Code	Z	D	d1	Insert Size
Type	Model						
Star	SR20 / ECAS20	Star	SRW4012 730 - 6	6	12	40	18W
			SRW4012 425 - 8	8			11W
	SR20 / ECAS20	WTO	SRW4295 557 - 6	6	9.5	42	18W
			SRW4212 717 - 8	8	12	42	11W
Citizen	M20 / M32	PCM	SRW4512 719 - 6	6	12	45	18W
			SRW4512 427 - 8	8			11W

* The above table serves as an example.



Product Identification - Ordering Codes

Toolholders

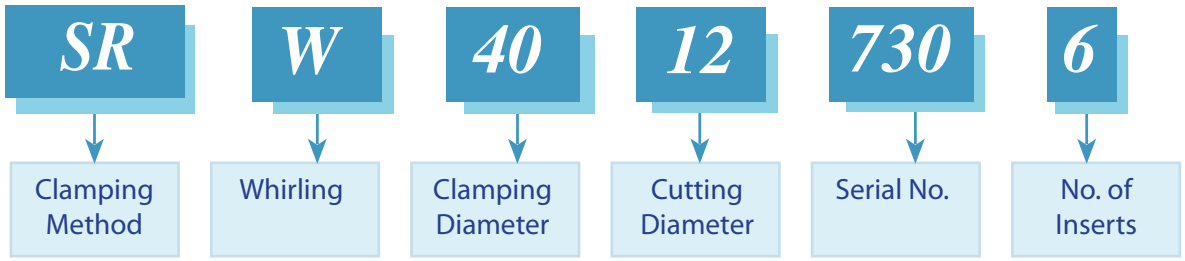

Inserts

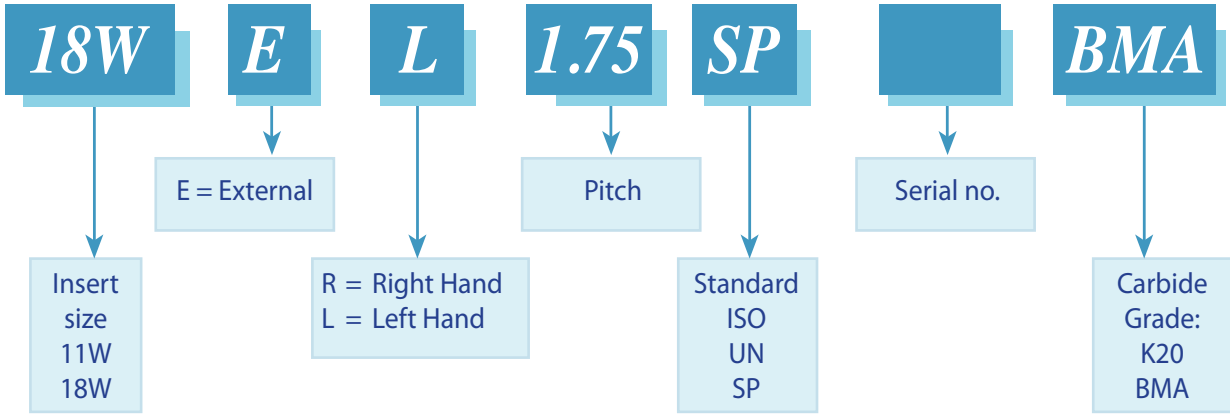



Case Study

Machine:	STAR SR20
Whirling unit:	STAR
Application:	Dental Implant
Material:	Ti-6Al-4V ELI
CPT holder:	SRW4012 730-6
Vc [m/min]:	65
Tooth load [mm/tooth]:	0.03
No. of parts:	25,000 +



SPECIALS ARE OUR SPECIALTY

CPT produce special tools in accordance with the customer's requirements



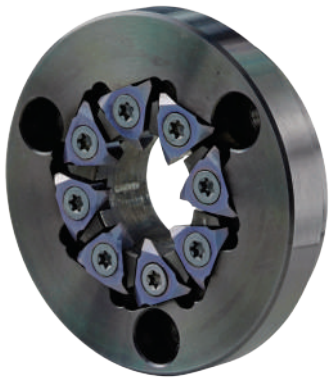



C.P.T. Precision Tools Ltd.

Milling Tools

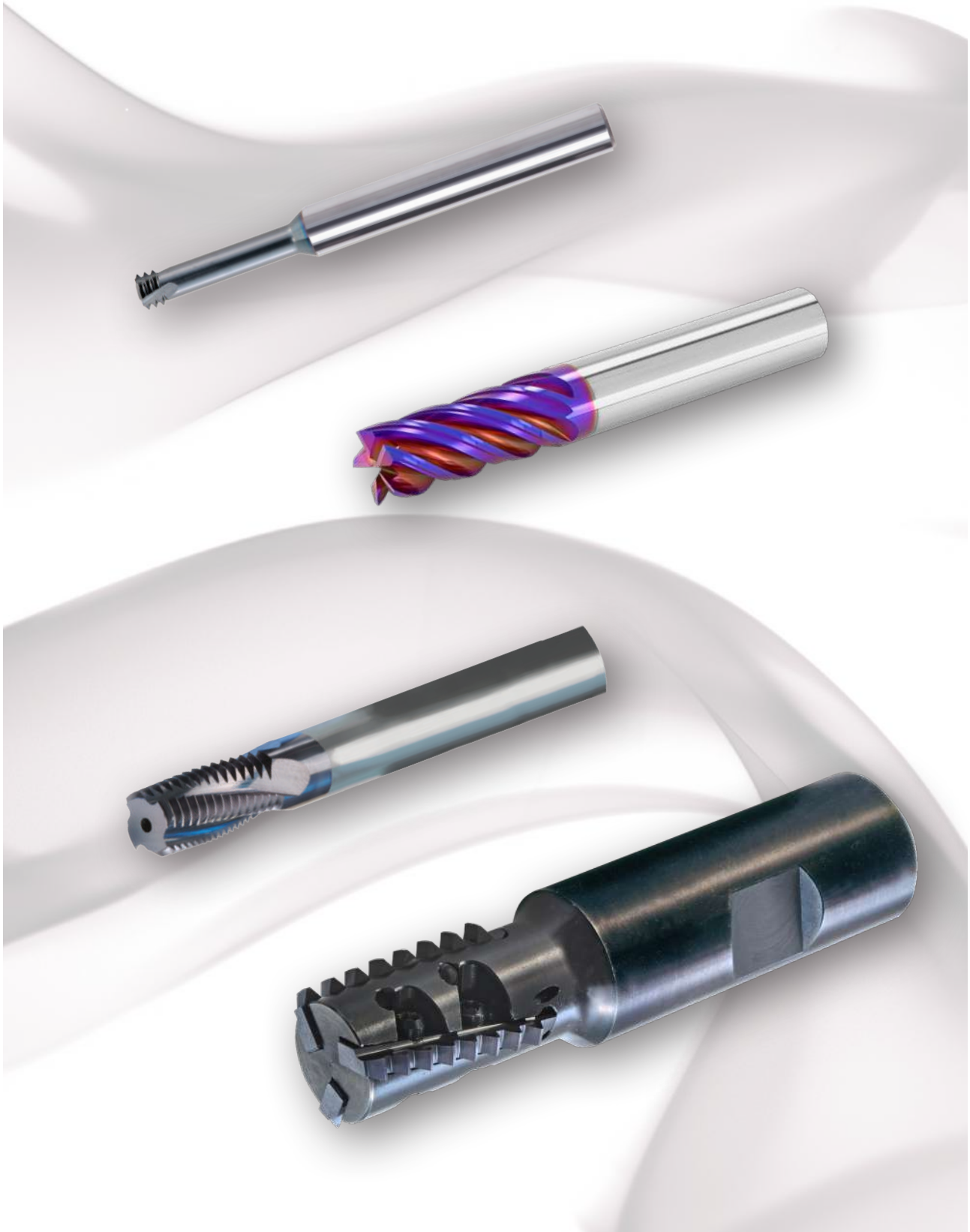

CONTENTS:

		Page:	
B01	Mill-Thread Inserts and Kits	1-12	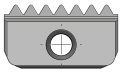
B02	Mill-Thread Toolholders	1-6	
B03	Slim MT	1-10	
B04	Spiral Mill-Thread	1-12	
B05	D-Thread	1-4	
B06	Deep Reach Mill-Thread	1-4	
B07	CMT	1-30	
B08	Mill-Thread Solid Carbide	1-28	
B09	Mini Mill-Thread	1-18	
B10	Multi - Function Thread Mills 3 in 1 Operations	1-10	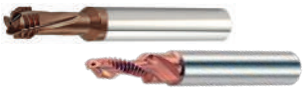
B11	HARDCUT	1-8	
B12	Mill-Thread Technical Section	1-22	
B13	Solid Carbide Grooving Tools	1-6	
B14	Supercut Solid Carbide Mills	1-40	
B15	Mini Chamfer and Countersink	1-10	
B16	Gear Milling	1-4	

Mill - Thread Inserts and Kits | B01

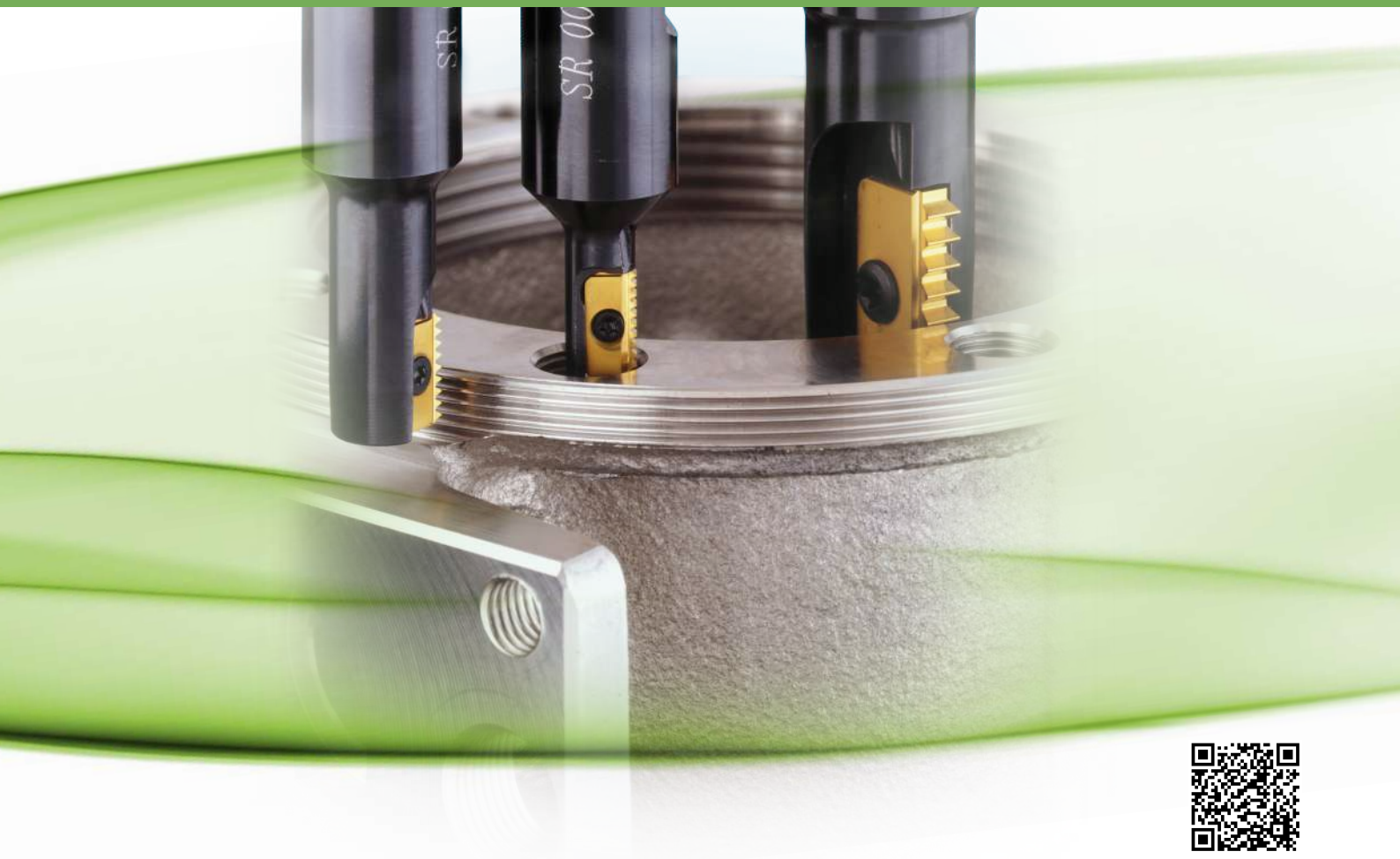

Demonstration

Mill-Thread tools for threading on CNC milling machines by using helical interpolation programs

Advantages of Mill-Thread Tools

- Same toolholder and insert can produce both right-hand and left-hand threads.
- A single insert & toolholder can produce a given thread on many diameters (External & Internal).
- Prismatic shape of insert's tail ensures exact and reliable clamping in the toolholder.
- Most inserts are double sided, having two cutting edges.
- Thread is produced in one tool pass.
- MT tools can produce tapered threads.
- Improved productivity thanks to increased cutting speeds and multitooth type carbide inserts.
- Threading to one pitch of a shoulder in a blind hole.
- Longer tool life thanks to a special multilayer coating process.
- Lower tooling costs, considerably less expensive than using taps and dies.
- Since lower machine power is required, a smaller machine can produce larger threads in a single operation with less idle time and tool changes.

Contents: Page:

Product Identification	2
ISO	3
UN	4
WHIT	5
BSPT	5
NPT	6
NPTF	6
NPS	7
NPSF	7
NPSM	8
PG - DIN 40430	8
UNJ	9
American Buttress	9
ACME	10
API RD	10
Internal ISO Kits	11
Special Tools	12

Product Identification

Mill-Thread Inserts Ordering Codes

30	E	12	UN	MT7
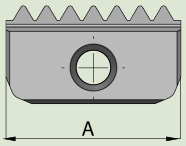 12 14 21 30 40	E = External I = Internal - = Ext. + Int.	Thread Pitch	Thread Profile ISO UN WHIT NPT NPTF BSPT NPS NPSF PG UNJ ACME AM. BUTT NPSM API RD	Carbide Grade MT7

	Insert Size = A				
	12	14	21	30	40
H	6.3	7.5	12	16	20
T	2.9	3.1	4.7	5.5	6.3

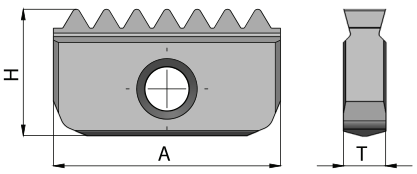

ISO

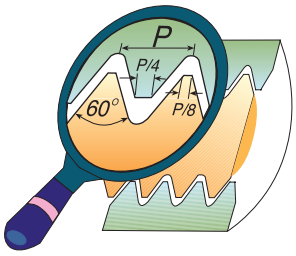

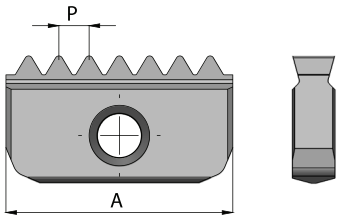

Pitch mm		Insert Size = A				
		12	14	21	30	40
0.5	Ext.					
0.5	Int.	* 12 I 0.5 ISO	14 I 0.5 ISO			
0.75	Ext.		14 E 0.75 ISO			
0.75	Int.	* 12 I 0.75 ISO	14 I 0.75 ISO			
1.0	Ext.		14 E 1.0 ISO	21 E 1.0 ISO		
1.0	Int.	* 12 I 1.0 ISO	14 I 1.0 ISO	21 I 1.0 ISO		
1.25	Ext.		14 E 1.25 ISO	21 E 1.25 ISO		
1.25	Int.	* 12 I 1.25 ISO	14 I 1.25 ISO	21 I 1.25 ISO		
1.5	Ext.		14 E 1.5 ISO	21 E 1.5 ISO	30 E 1.5 ISO	40 E 1.5 ISO
1.5	Int.	* 12 I 1.5 ISO	14 I 1.5 ISO	21 I 1.5 ISO	30 I 1.5 ISO	40 I 1.5 ISO
1.75	Ext.		14 E 1.75 ISO	21 E 1.75 ISO		
1.75	Int.		14 I 1.75 ISO	21 I 1.75 ISO		
2.0	Ext.		14 E 2.0 ISO	21 E 2.0 ISO	30 E 2.0 ISO	40 E 2.0 ISO
2.0	Int.		14 I 2.0 ISO	21 I 2.0 ISO	30 I 2.0 ISO	40 I 2.0 ISO
2.5	Ext.		14 E 2.5 ISO	21 E 2.5 ISO		
2.5	Int.		14 I 2.5 ISO	21 I 2.5 ISO		
3.0	Ext.			21 E 3.0 ISO	30 E 3.0 ISO	40 E 3.0 ISO
3.0	Int.			21 I 3.0 ISO	30 I 3.0 ISO	40 I 3.0 ISO
3.5	Ext.				30 E 3.5 ISO	
3.5	Int.			21 I 3.5 ISO	30 I 3.5 ISO	40 I 3.5 ISO
4.0	Ext.				30 E 4.0 ISO	40 E 4.0 ISO
4.0	Int.				30 I 4.0 ISO	40 I 4.0 ISO
4.5	Ext.					
4.5	Int.				30 I 4.5 ISO	40 I 4.5 ISO
5.0	Ext.					40 E 5.0 ISO
5.0	Int.				30 I 5.0 ISO	40 I 5.0 ISO
5.5	Ext.					
5.5	Int.				30 I 5.5 ISO	40 I 5.5 ISO
6.0	Ext.					40 E 6.0 ISO
6.0	Int.					40 I 6.0 ISO

Order example: 14 I 1.5 ISO MT7

* One cutting edge

UN UNC, UNF, UNEF, UNS

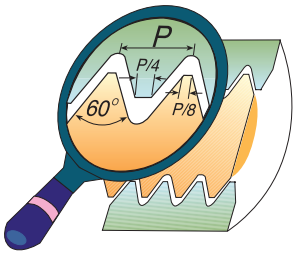

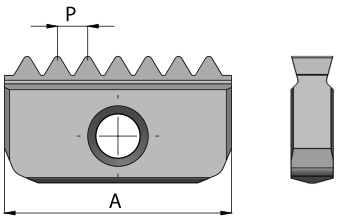

Pitch TPI		Insert Size = A				
		12	14	21	30	40
32	Ext.		14 E 32 UN			
32	Int.	* 12 I 32 UN	14 I 32 UN			
28	Ext.		14 E 28 UN			
28	Int.	* 12 I 28 UN	14 I 28 UN			
27	Ext.					
27	Int.		14 I 27 UN			
24	Ext.		14 E 24 UN	21 E 24 UN		
24	Int.	* 12 I 24 UN	14 I 24 UN	21 I 24 UN		
20	Ext.		14 E 20 UN	21 E 20 UN	30 E 20 UN	
20	Int.	* 12 I 20 UN	14 I 20 UN	21 I 20 UN	30 I 20 UN	
18	Ext.		14 E 18 UN	21 E 18 UN	30 E 18 UN	
18	Int.	* 12 I 18 UN	14 I 18 UN	21 I 18 UN	30 I 18 UN	
16	Ext.		14 E 16 UN	21 E 16 UN	30 E 16 UN	40 E 16 UN
16	Int.	* 12 I 16 UN	14 I 16 UN	21 I 16 UN	30 I 16 UN	40 I 16 UN
14	Ext.		14 E 14 UN	21 E 14 UN	30 E 14 UN	40 E 14 UN
14	Int.		14 I 14 UN	21 I 14 UN	30 I 14 UN	40 I 14 UN
13	Ext.		14 E 13 UN			
12	Ext.		14 E 12 UN	21 E 12 UN	30 E 12 UN	40 E 12 UN
12	Int.		14 I 12 UN	21 I 12 UN	30 I 12 UN	40 I 12 UN
11	Ext.		14 E 11 UN	21 E 11 UN		
11	Int.		14 I 11 UN			
10	Ext.		* 14 E 10 UN	21 E 10 UN	30 E 10 UN	40 E 10 UN
10	Int.		14 I 10 UN	21 I 10 UN	30 I 10 UN	40 I 10 UN
9	Ext.					
9	Int.		** 14 I 9 UN			
8	Ext.				30 E 8 UN	40 E 8 UN
8	Int.			21 I 8 UN	30 I 8 UN	40 I 8 UN
7	Ext.					
7	Int.			21 I 7 UN		
6	Ext.				30 E 6 UN	40 E 6 UN
6	Int.				30 I 6 UN	40 I 6 UN
5	Ext.					
5	Int.				30 I 5 UN	
4.5	Ext					
4.5	Int.					40 I 4.5UN
4	Ext					40 E 4 UN
4	Int.					40 I 4 UN

Order example: 21 I 18 UN MT7

* One cutting edge

** Cannot be used with carbide shank Toolholders.

WHIT BSW, BSF, BSP

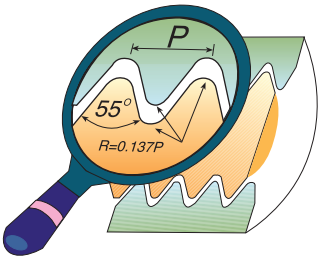

Same Insert for External and Internal thread.

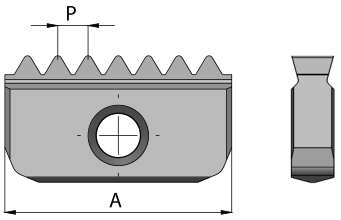

Pitch TPI	Insert Size = A				
	12	14	21	30	40
24		14-24 W			
20		14-20 W	21-20 W		
19	* 12 - 19 W	14-19 W	21-19 W		
18		14-18 W			
16		14-16 W	21-16 W	30-16 W	
14		14-14 W	21-14 W	30-14 W	
12		14-12 W	21-12 W		
11		*14-11 W	21-11 W	30-11 W	40-11 W
10			21-10 W		
8					40- 8 W

* One cutting edge

Order example: 21-11 W MT7

BSPT

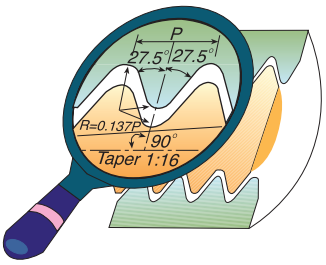

Conical pipe thread inserts are one-sided and may be used for both External and Internal threading.

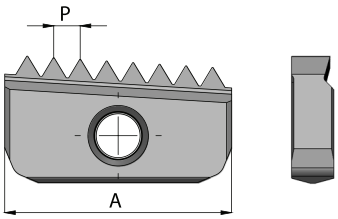

Pitch TPI	Insert Size = A				
	12	14	21	30	40
19	12-19 BSPT	14-19 BSPT			
14		14-14 BSPT	21-14 BSPT		
11			21-11 BSPT	30-11 BSPT	40-11 BSPT

Order example: 14-19 BSPT MT7

For conical preparation end mills see page B08-23

NPT

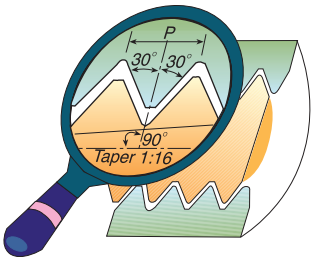

Conical pipe thread inserts are one-sided and may be used for both External and Internal threading.

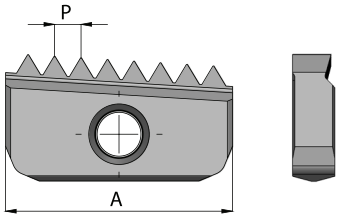

Pitch TPI	Insert Size = A				
	12	14	21	30	40
18	12-18 NPT	14-18 NPT			
14		14-14 NPT	21-14 NPT		
11.5			21-11.5 NPT	30-11.5 NPT	40-11.5 NPT
8				30- 8 NPT	40- 8 NPT

Order example: 30-11.5 NPT MT7

For conical preparation end mills see page B08-23

NPTF

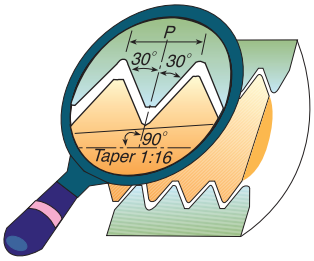

Conical pipe thread inserts are one-sided and may be used for both External and Internal threading.

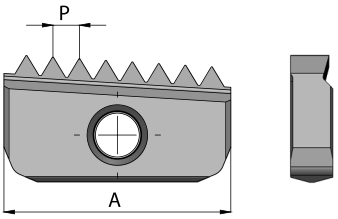

Pitch TPI	Insert Size = A				
	12	14	21	30	40
18	12-18 NPTF	14-18 NPTF			
14		14-14 NPTF	21-14 NPTF		
11.5			21-11.5 NPTF	30-11.5 NPTF	40-11.5 NPTF
8				30- 8 NPTF	40- 8 NPTF

Order example: 21-14 NPTF MT7

For conical preparation end mills see page B08-23

NPS

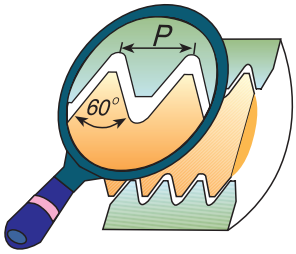

Same Insert for External and Internal thread

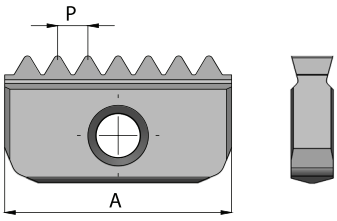

Pitch TPI	Insert Size = A				
	12	14	21	30	40
18	* 12-18 NPS	14-18 NPS			
14		14-14 NPS	21-14 NPS		
11.5			21-11.5 NPS	30-11.5 NPS	40-11.5 NPS
8				30- 8 NPS	40- 8 NPS

Order example: 30-11.5 NPS MT7
* One cutting edge

NPSF

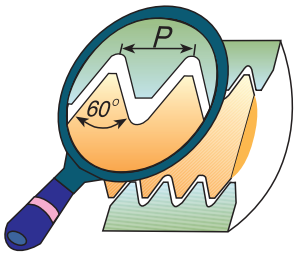

Same Insert for External and Internal thread

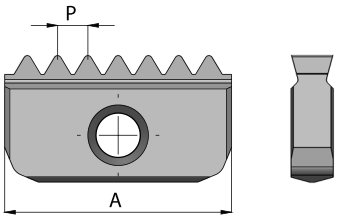

Pitch TPI	Insert Size = A				
	12	14	21	30	40
18	* 12-18 NPSF	14-18 NPSF			
14		14-14 NPSF	21-14 NPSF		
11.5			21-11.5 NPSF	30-11.5 NPSF	40-11.5 NPSF
8				30- 8 NPSF	40- 8 NPSF

Order example: 21-14 NPSF MT7
* One cutting edge

NPSM

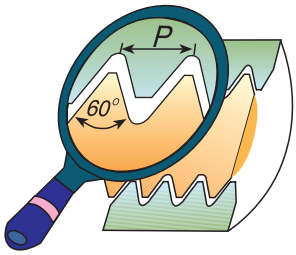

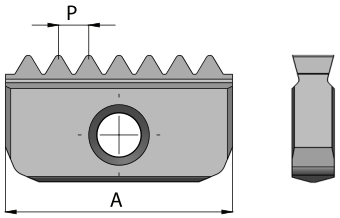

Pitch TPI		Insert Size = A				
		12	14	21	30	40
18	Ext.		14 E 18 NPSM			
18	Int.	12 I 18 NPSM	14 I 18 NPSM			
14	Ext.			21 E 14 NPSM		
14	Int.		14 I 14 NPSM	21 I 14 NPSM		
11.5	Ext.			21 E 11.5 NPSM	30 E 11.5 NPSM	40 E 11.5 NPSM
11.5	Int.			21 I 11.5 NPSM	30 I 11.5 NPSM	40 I 11.5 NPSM
8	Ext.				30 E 8 NPSM	40 E 8 NPSM
8	Int.				30 I 8 NPSM	40 I 8 NPSM

Order example: 21 I 11.5 NPSM MT7

PG - DIN 40430

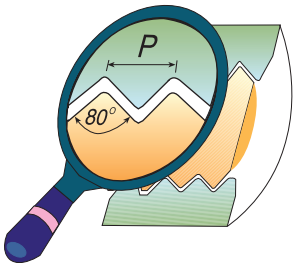

Same Insert for External and Internal thread

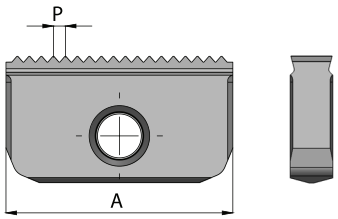

Pitch TPI	Insert Size = A		
	14	21	30
18	14-18 PG (PG 9, 11, 13.5, 16)	21-18 PG (PG 16)	
16		21-16 PG (PG 21, 29, 36, 42, 48)	30-16 PG (PG 36, 42, 48)

Order example: 21-18 PG MT7

UNJ

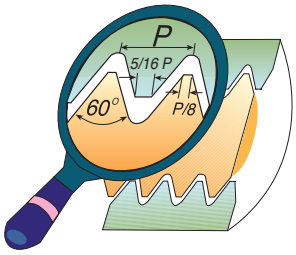

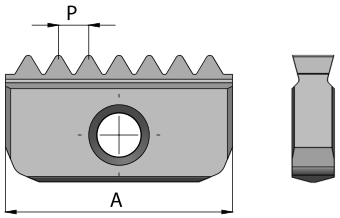

Pitch TPI		Insert Size = A	
		14	21
24	Ext.	14 E 24 UNJ	21 E 24 UNJ
24	Int.	14 I 24 UNJ	21 I 24 UNJ
20	Ext.	14 E 20 UNJ	21 E 20 UNJ
20	Int.	14 I 20 UNJ	21 I 20 UNJ
18	Ext.	14 E 18 UNJ	21 E 18 UNJ
18	Int.	14 I 18 UNJ	21 I 18 UNJ
16	Ext.	14 E 16 UNJ	21 E 16 UNJ
16	Int.	14 I 16 UNJ	21 I 16 UNJ
14	Ext.	14 E 14 UNJ	21 E 14 UNJ
14	Int.	14 I 14 UNJ	21 I 14 UNJ
12	Ext.	14 E 12 UNJ	21 E 12 UNJ
12	Int.	14 I 12 UNJ	21 I 12 UNJ

Order example: 21E 16 UNJ MT7

American Buttress

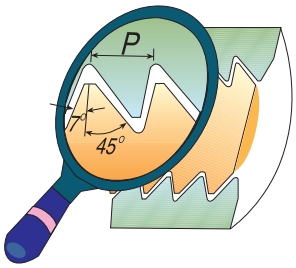

ABUT thread inserts are one-sided and may be used for both External and Internal threading

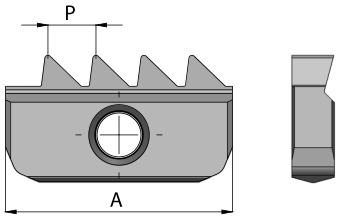

Pitch TPI	Insert Size = A		
	21	30	40
16	21 - 16 ABUT	30 - 16 ABUT	
12	21 - 12 ABUT	30 - 12 ABUT	
10	21 - 10 ABUT	30 - 10 ABUT	
8	21 - 8 ABUT	30 - 8 ABUT	
6		30 - 6 ABUT	
4		* 30 - 4 ABUT	40 - 4 ABUT

Order example: 30 - 6 ABUT MT7

* Inserts to be used only on Multi-Insert toolholders see page B02-5

ACME

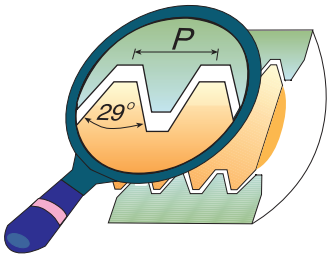

Inserts for Internal threads

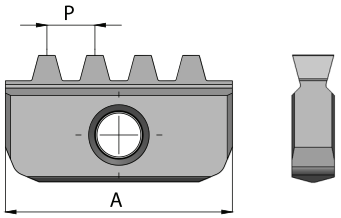

Pitch TPI		Insert Size = A		
		21	30	40
12	Int.	21 I 12 ACME	30 I 12 ACME	
10	Int.	21 I 10 ACME	30 I 10 ACME	
8	Int.	21 I 8 ACME	30 I 8 ACME	
6	Int.		30 I 6 ACME	
5	Int.		30 I 5 ACME	
4	Int.		* 30 I 4 ACME	40 I 4 ACME
3.5	Int.			40 I 3.5 ACME
3	Int.			** 40 I 3 ACME

Order example: 21 I 8 ACME MT7

* Inserts to be used only on Multi-Insert toolholders see page B02-5

** One cutting edge

API RD

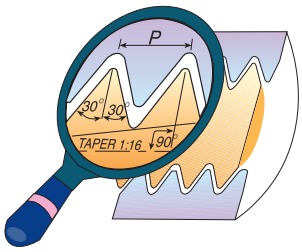

API RD thread inserts are one-sided and may be used for both External and Internal threading

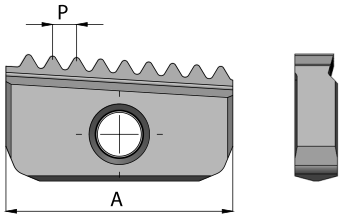

Pitch TPI	Insert Size = A		
	21	30	40
10	21 - 10 API RD	30 - 10 API RD	
8		30 - 8 API RD	40 - 8 API RD

Order example: 30 - 8 API RD MT7

Internal ISO Kits



MTK 12 I ISO	MTK 14 I ISO
INSERTS	INSERTS
12 I 0.75 ISO 12 I 1.0 ISO 2 Pcs 12 I 1.25 ISO 12 I 1.5 ISO 2 Pcs	14 I 1.0 ISO 2 Pcs 14 I 1.5 ISO 2 Pcs 14 I 2.0 ISO 2 Pcs
TOOLHOLDER	TOOLHOLDER
SR 0009 H12	SR 0017 H14
KEY	KEY
K12	K14
SCREW	SCREW
S12	S14

Order example : MTK 14 I ISO

Special Tools



In addition to standard products,
CPT manufactures special tools and inserts
according to customers' requests.
Special tools are supplied in short delivery times.

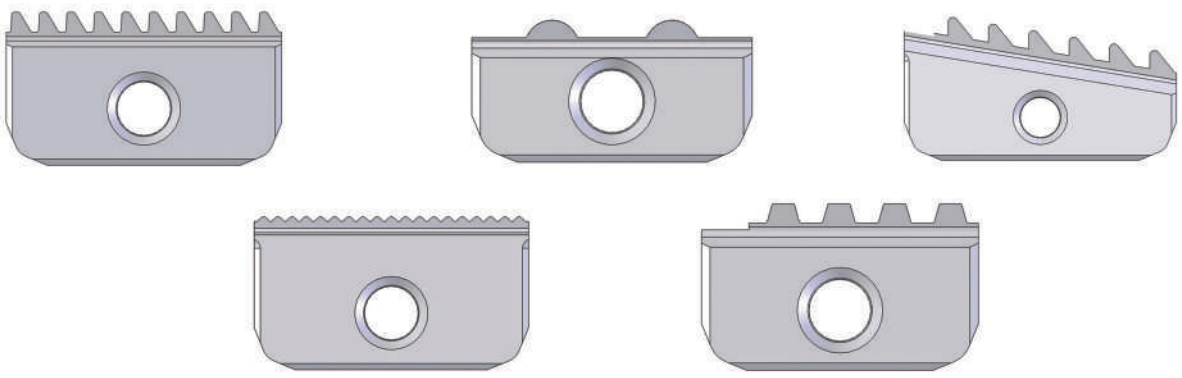

Mill-Thread Toolholders | B02



Demonstration

Contents:	Page:	Contents:	Page:
Product Identification	2	External Multi Insert Toolholder	5
Single Insert Toolholders	3	Long Carbide Shank Toolholders	6
Long Shank Toolholders	4	Carbide Shank Toolholders for Single Point Threading	6
Twin Insert Toolholders	4		
Multi Insert Toolholders	5		

Product Identification

Mill-Thread Toolholders Ordering Codes

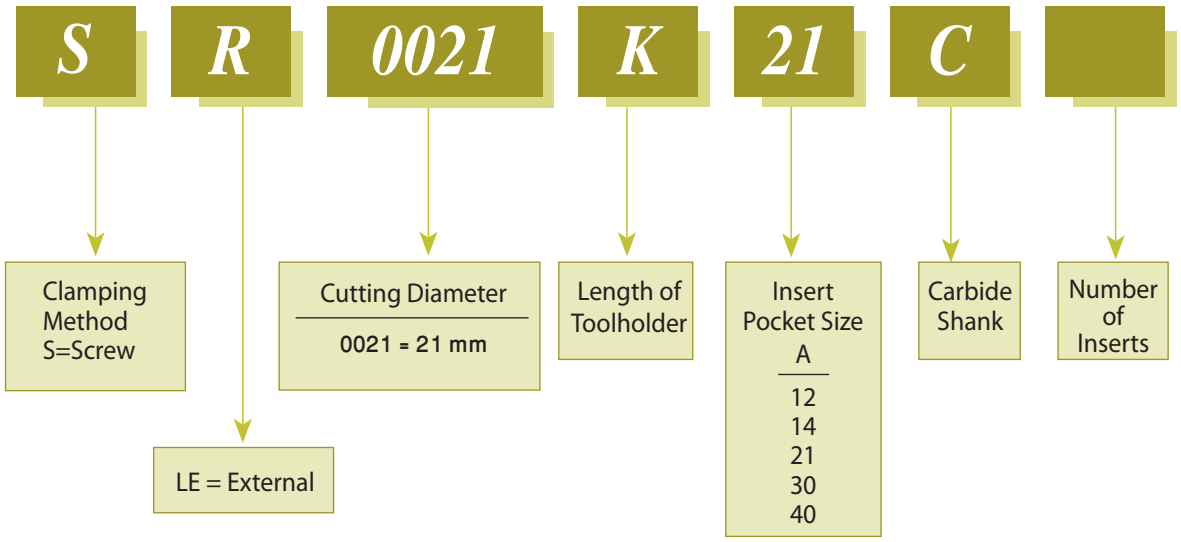

Single Insert Toolholders

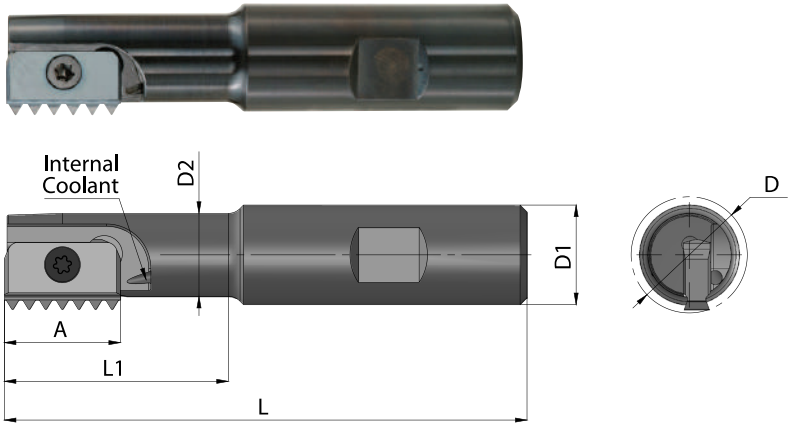

Ordering Code	A	D	D1	D2	L	L1	Insert Screw	Torx Key
* SR0009H12	12	9.5	20	7.5	85	14	S12	K12
SR0010H12	12	9.9	20	7.6	85	16	S12	K12
SR0012F14	14	12.0	20	8.9	75	20	S14	K14
SR0014H14	14	14.5	20	11.2	85	25	S14	K14
SR0017H14	14	17.0	20	13.4	85	30	S14	K14
** SR0018H21	21	18.0	20	14.4	85	30	S21	K21
SR0021H21	21	21.0	20	16.5	94	40	S21	K21
SR0029J30	30	29.0	25	22.4	110	50	S30	K30
SR0048M40	40	48.0	40	35.0	153	78	S40	K40

Order example: SR0029J30

* Not for conical inserts: 12-18 NPT, 12-18 NPTF, 12-19 BSPT

** Cannot be used with the following inserts:
21 I 3.5 ISO, 21 I 8 UN, 21 I 7 UN, 21-11 BSPT, 21-11.5 NPT, 21-11.5 NPTF

Long Shank Toolholders

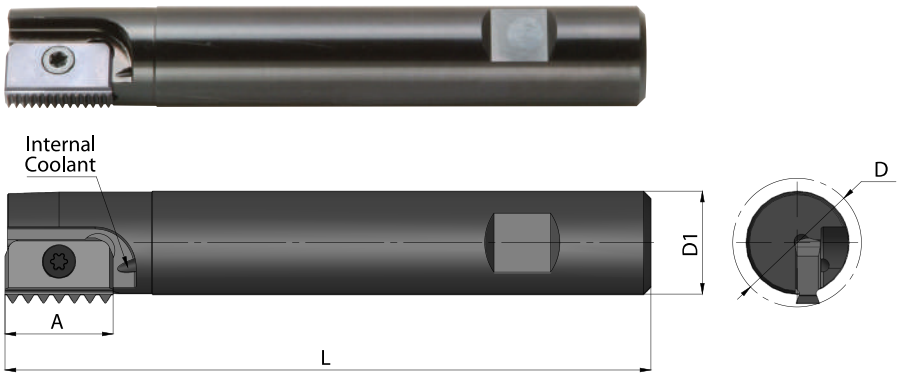

Ordering Code	A	D	D1	L	Insert Screw	Torx Key
SR0025K21	21	25	20	125	S21	K21
SR0031M30	30	31	25	150	S30	K30
SR0038M30	30	38	32	150	S30	K30
SR0048R40	40	48	40	210	S40	K40

Order example: SR0031M30

For holders with long overhang reduce the cutting speed and feed rate between 20% to 40% (depends on workpiece material, pitch and overhang)

Twin Insert Toolholders

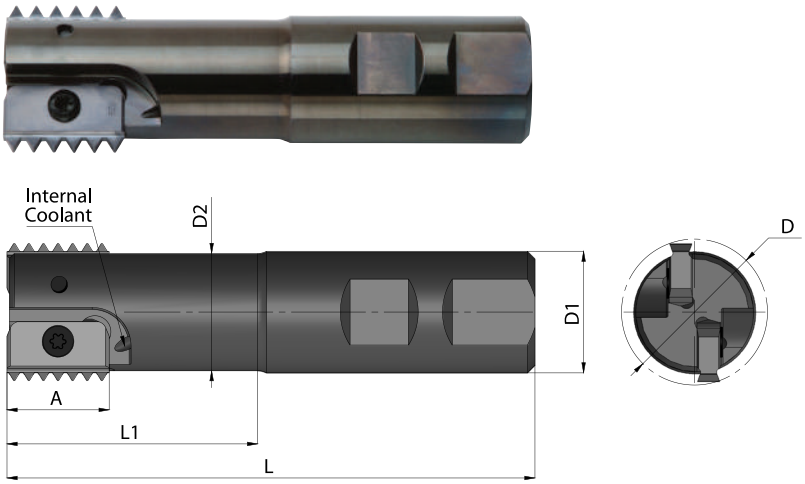

Ordering Code	A	D	D1	D2	L	L1	No. of Inserts	Insert Screw	Torx Key
SR0020H14-2	14	20	20	16	93	41	2	S14	K14
SR0030J21-2	21	30	25	24	108	52	2	S21	K21
SR0040L30-2	30	40	32	30	130	70	2	S30	K30
SR0050M40-2	40	50	40	38	153	78	2	S40	K40

Order example: SR0040L30-2

Multi Insert Toolholders



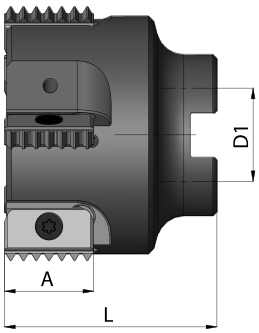

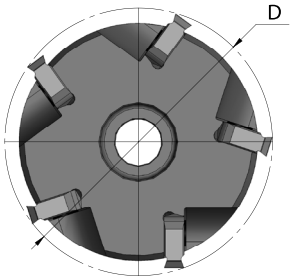

Ordering Code	A	D	D1	L	No. of Inserts	Insert Screw	Torx Key
SR0063C21-5	21	63	22	50	5	S21	K21
SR0063C30-4	30	63	22	50	4	S30	K30
SR0080D30-4	30	80	27	55	4	S30	K30
SR0100D30-4	30	100	32	60	4	S30	K30
SR0100D30-8	30	100	32	60	8	S30	K30
SR0080D40-4	40	80	27	65	4	S40	K40
SR0100E40-4	40	100	32	70	4	S40	K40
SR0100E40-6	40	100	32	70	6	S40	K40

Order example: SR0080D30-4

External Multi Insert Toolholder

Demonstration

- Reduced machining time
- Optimal coolant supply



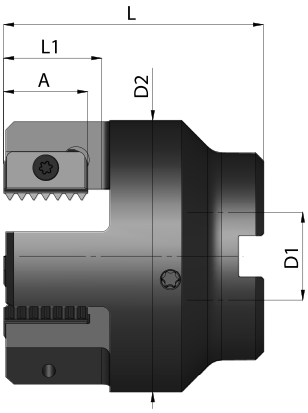

With internal coolant bore

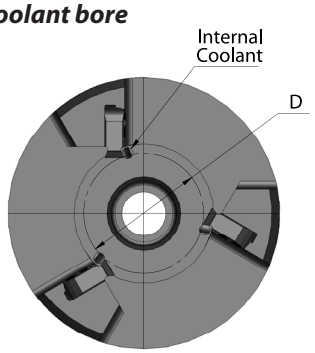

Ordering Code	A	D	D1	D2	L	L1	No. of Inserts	Insert Screw	Torx Key
SLE0020D21-3	21	20	22	58	65	25	3	S21	K21
SLE0030D21-3	21	30	22	68	65	25	3	S21	K21
SLE0045E21-4	21	45	27	83	70	25	4	S21	K21

Order example: SLE0030D21-3

Long Carbide Shank Toolholders



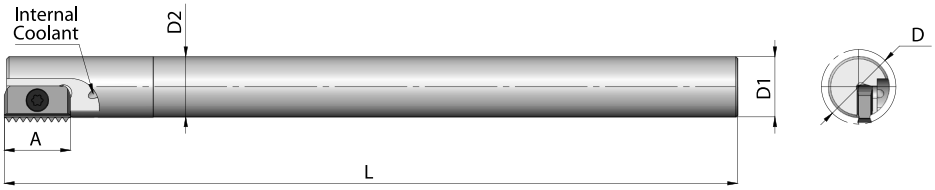

Ordering Code	A	D	D1	D2	L	Insert Screw	Torx Key
SR0010K12C	12	9.9	8	8	125	S12	K12
SR0013H14C	14	13.2	10	10	110	S14	K14
SR0013J14C	14	13.2	10	10	155	S14	K14
SR0015K14C	14	15.2	12	12	175	S14	K14
SR0021K21C	21	21.0	16	16	130	S21	K21
SR0021M21C	21	21.0	16	16	200	S21	K21
SR0027S30C	30	27.0	20	20	270	S30	K30

Order example: SR0015K14C

For holders with long overhang reduce the cutting speed and feed rate between 20% to 40% (depends on workpiece material, pitch and overhang)

Carbide Shank Toolholders for Single Point Threading



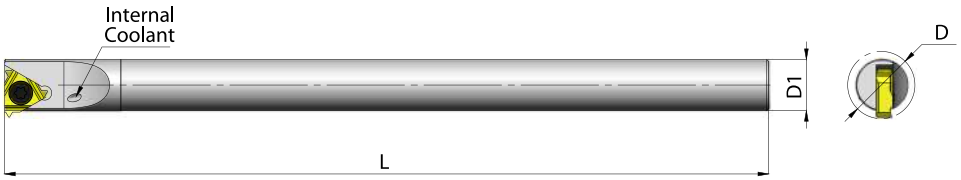

Ordering Code		Pitch Range		D	D1	L	Insert Screw	Torx Key
		mm	TPI					
SR0005D06C	6	0.5-1.25	48-20	6.8	5.0	63	S06	K06
SR0006H08C	8	0.5-1.75	48-14	8.8	6.0	100	S08	K08
*** SR0010M11C**	11	0.5-2.00	48-11	13.2	10.0	150	S11	K11

For Inserts see the Thread Turning Tools section of this catalog.
For an internal application use an internal R.H. insert.

* For an external application use an external L.H. insert.

Slim MT

B03



Contents:	Page:	Contents:	Page:
Introduction	2	BSPT	7
Product Identification	3	Toolholders	8-9
ISO	4	Standard Toolholders	8
UN	5	Toolholders for Conical Threads	8
WHIT BSW, BSF, BSP	6	Carbide Shank Toolholders	9
NPT	6	Multi-Insert Toolholders	9
NPTF	7		

Slim MT

High productivity, Slim cost

A new product line of indexable Mill-Thread inserts and toolholders including multiple straight flutes for machining long threads from small to large diameters.

- **Advanced carbide and coating combination for extended tool life and improved productivity**
- **Most inserts are double sided**
- **Nickel coated holders for high wear resistance**
- **Unique clamping mechanism**
- **Large variety of holders & inserts in accordance to international standards**

Product Identification

Inserts

SL	26	I	1.5	ISO	MT17
Slim MT	Insert Size 26 = 26 mm 40 = 40 mm	I = Internal E = External - = Ex + In	Thread Pitch	ISO UN WHIT NPT BSPT	Carbide Grade

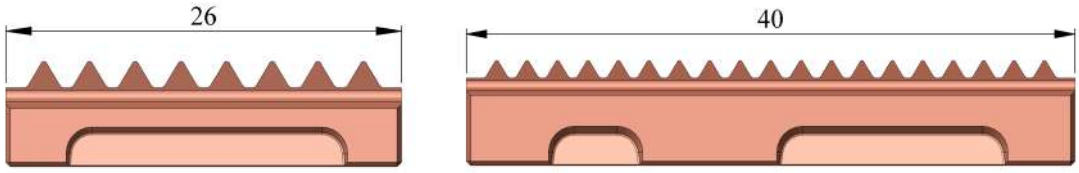

Toolholders

SR	T	22		45	SL26	3	C
SR Type	For Conical Inserts	Cutting Diameter 17 = 17 mm	Shank Diameter D1	Neck Length	Insert Size SL26 SL40	Number Of Inserts	Carbide Shank

ISO

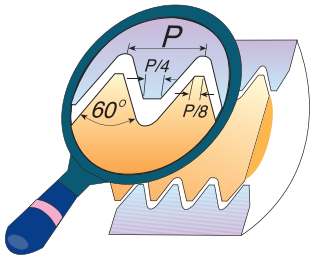

Insert size	Pitch mm	Ex/In	Ordering code	Toolholder
SL 26	0.5	In	**SL26 I 0.5 ISO**	SR ….. - SL26 - …
	0.75	In	**SL26 I 0.75 ISO**	
	1.0	In	**SL26 I 1.0 ISO**	
	1.0	Ex	**SL26 E 1.0 ISO**	
	1.5	In	**SL26 I 1.5 ISO**	
	1.5	Ex	**SL26 E 1.5 ISO**	
	2.0	In	**SL26 I 2.0 ISO**	
	2.0	Ex	**SL26 E 2.0 ISO**	
	2.5	In	**SL26 I 2.5 ISO**	
	2.5	Ex	**SL26 E 2.5 ISO**	
	3.0	In	*** SL26 I 3.0 ISO**	
	3.0	Ex	*** SL26 E 3.0 ISO**	
SL 40	1.5	In	**SL40 I 1.5 ISO**	SR ….. - SL40 - …
	2.0	In	**SL40 I 2.0 ISO**	
	2.5	In	**SL40 I 2.5 ISO**	
	3.0	In	**SL40 I 3.0 ISO**	

* Cannot be used with Toolholder SR17- … -SL26-2

For Toolholders see pages B03-8 and 9

For carbide grade and cutting speed see page B12-6

UN

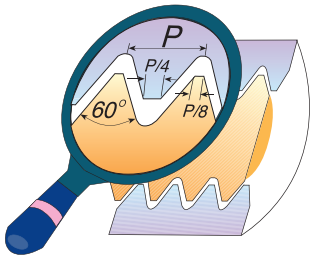

Insert size	Pitch TPI	Ex/In	Ordering code	Toolholder
SL 26	20	In	**SL26 I 20 UN**	SR ….. - SL26 - …
	20	Ex	**SL26 E 20 UN**	
	18	In	**SL26 I 18 UN**	
	18	Ex	**SL26 E 18 UN**	
	16	In	**SL26 I 16 UN**	
	16	Ex	**SL26 E 16 UN**	
	14	In	**SL26 I 14 UN**	
	14	Ex	**SL26 E 14 UN**	
	12	In	**SL26 I 12 UN**	
	12	Ex	**SL26 E 12 UN**	
	10	In	**SL26 I 10 UN**	
	10	Ex	**SL26 E 10 UN**	
	9	In	*** SL26 I 9 UN**	
	8	In	*** SL26 I 8 UN**	
SL 40	16	In	**SL40 I 16 UN**	SR ….. - SL40 - …
	14	In	**SL40 I 14 UN**	
	12	In	**SL40 I 12 UN**	
	10	In	**SL40 I 10 UN**	

* Cannot be used with Toolholder SR17- … -SL26-2

For Toolholders see pages B03-8 and 9

For carbide grade and cutting speed see page B12-6

WHIT BSW, BSF, BSP

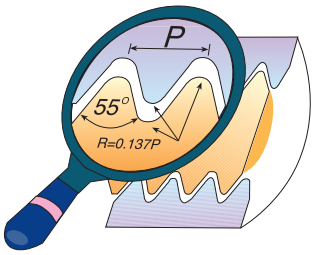

Same insert for External and Internal thread

Insert size	Pitch TPI	Ordering code	Toolholder
SL 26	14	**SL 26 - 14 W**	SR ..... - SL26 - ...
	11	**SL 26 - 11 W**	
SL 40	14	**SL 40 - 14 W**	SR ..... - SL40 - ...
	11	**SL 40 - 11 W**	

For Toolholders see pages B03-8 and 9

NPT

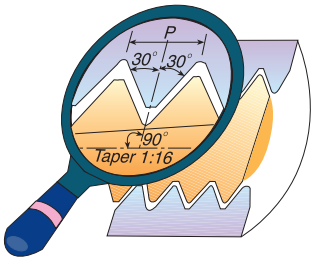

Conical pipe thread inserts are one-sided and may be used for both External and Internal threading

Insert size	Pitch TPI	Ordering code	Toolholder
SL 26	14	**SL 26 - 14 NPT**	SR ..... - SL26 - ...
	11.5	*** SL 26 - 11.5 NPT**	

* Cannot be used with Toolholder SRT17-...-SL26-2

For Toolholders see pages B03-8 and 9

For carbide grade and cutting speed see page B12-6

NPTF

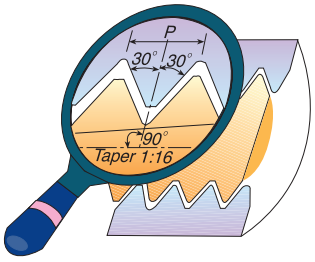

Conical pipe thread inserts are one-sided and may be used for both External and Internal threading

Insert size	Pitch TPI	Ordering code	Toolholder
SL 26	14	**SL 26 - 14 NPTF**	SR ….. - SL26 - …
	11.5	*** SL 26 - 11.5 NPTF**	

* Cannot be used with Toolholder SRT17-...-SL26-2

For Toolholders see pages B03-8 and 9

BSPT

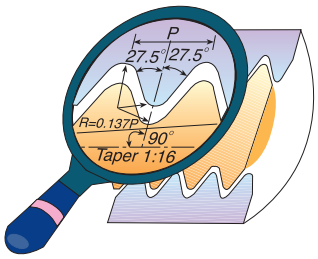

Conical pipe thread inserts are one-sided and may be used for both External and Internal threading

Insert size	Pitch TPI	Ordering code	Toolholder
SL 26	14	**SL 26 - 14 BSPT**	SR ….. - SL26 - …
	11	*** SL 26 - 11 BSPT**	

* Cannot be used with Toolholder SRT17-...-SL26-2

For Toolholders see pages B03-8 and 9

For carbide grade and cutting speed see page B12-6

Toolholders

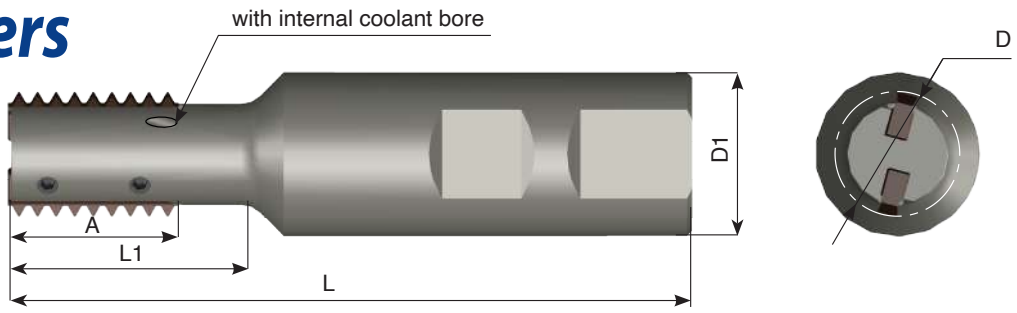

Ordering Code	Insert size=A	D	D1	L	L1	No. of Inserts	Screw	Key
* SR17-20-27-SL26-2	SL 26	17.0	20.0	95	27	2	S4P	K08P
* SR17-20-36-SL26-2		17.0	20.0	105	36	2	S4P	K08P
SR17-27-SL26-2		17.0	25.0	95	27	2	S4P	K08P
SR17-36-SL26-2		17.0	25.0	105	36	2	S4P	K08P
SR19-27-SL26-2		19.0	25.0	95	27	2	S4P	K08P
SR19-40-SL26-2		19.0	25.0	110	40	2	S4P	K08P
SR20-27-SL26-3		20.5	25.0	95	27	3	S4P	K08P
SR20-40-SL26-3		20.5	25.0	110	40	3	S4P	K08P
SR22-28-SL26-3		22.0	25.0	95	28	3	S4P	K08P
SR22-42-SL26-3		22.0	25.0	110	42	3	S4P	K08P
SR22-55-SL26-2		22.0	25.0	125	55	2	S4P	K08P
SR30-80-SL26-3		30.0	25.0	150	80	3	S4P	K08P
SR22-42-SL40-3	SL 40	22.0	25.0	110	42	3	S4P	K08P
SR22-65-SL40-2		22.0	25.0	135	65	2	S4P	K08P
SR30-42-SL40-4		30.0	32.0	125	42	4	S4P	K08P
SR30-80-SL40-3		30.0	32.0	160	80	3	S4P	K08P

* Straight shank Toolholder

Toolholders
for Conical Threads

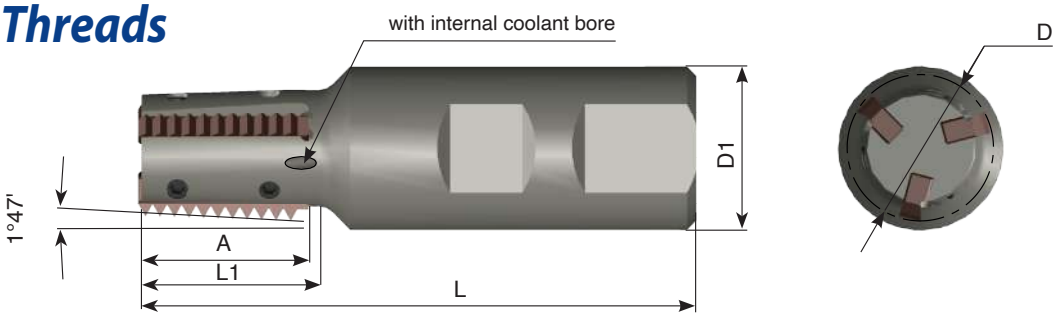

Ordering Code	Insert size=A	D	D1	L	L1	No. of Inserts	Screw	Key
* SR T 17-20-27-SL26-2	SL 26	17.0	20.0	95	27	2	S4P	K08P
SR T 17-27-SL26-2		17.0	25.0	95	27	2	S4P	K08P
SR T 22-27-SL26-3		22.0	25.0	95	27	3	S4P	K08P
SR T 27-27-SL26-4		27.0	25.0	95	27	4	S4P	K08P

* Straight shank Toolholder

Carbide Shank Toolholders

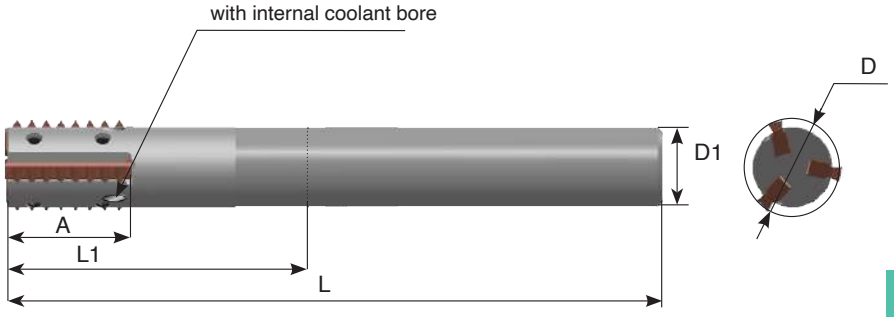

Ordering Code	Insert size=A	D	D1	L	L1	No. of Inserts	Screw	Key
SR 19-70-SL26-2 C	SL 26	19.0	16.0	135	70	2	S4P	K08P
SR 20-70-SL26-3 C		20.5	16.0	135	70	3	S4P	K08P

Multi-Insert Toolholders

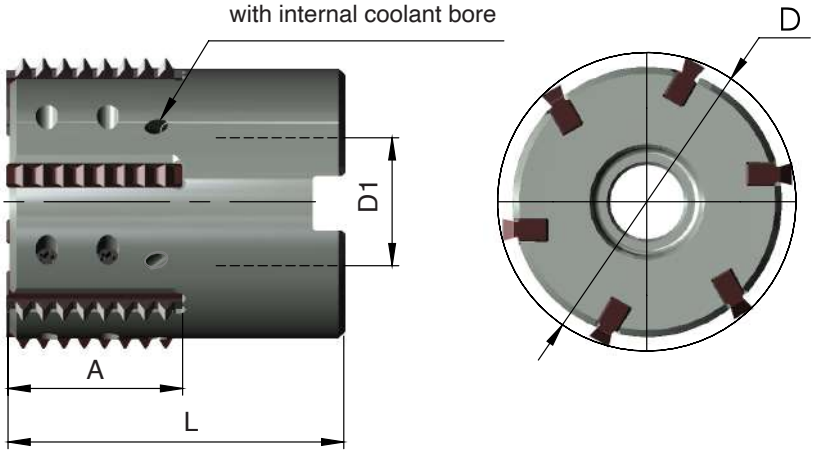

Ordering Code	Insert size=A	D	D1	L	No. of Inserts	Screw	Key
SR 36-16-SL26-5	SL 26	36.0	16	50	5	S4P	K08P
SR 44-22-SL26-6		44.0	22	50	6	S4P	K08P
SR 44-22-SL40-6	SL 40	44.0	22	65	6	S4P	K08P

Spiral Mill-Thread | B04

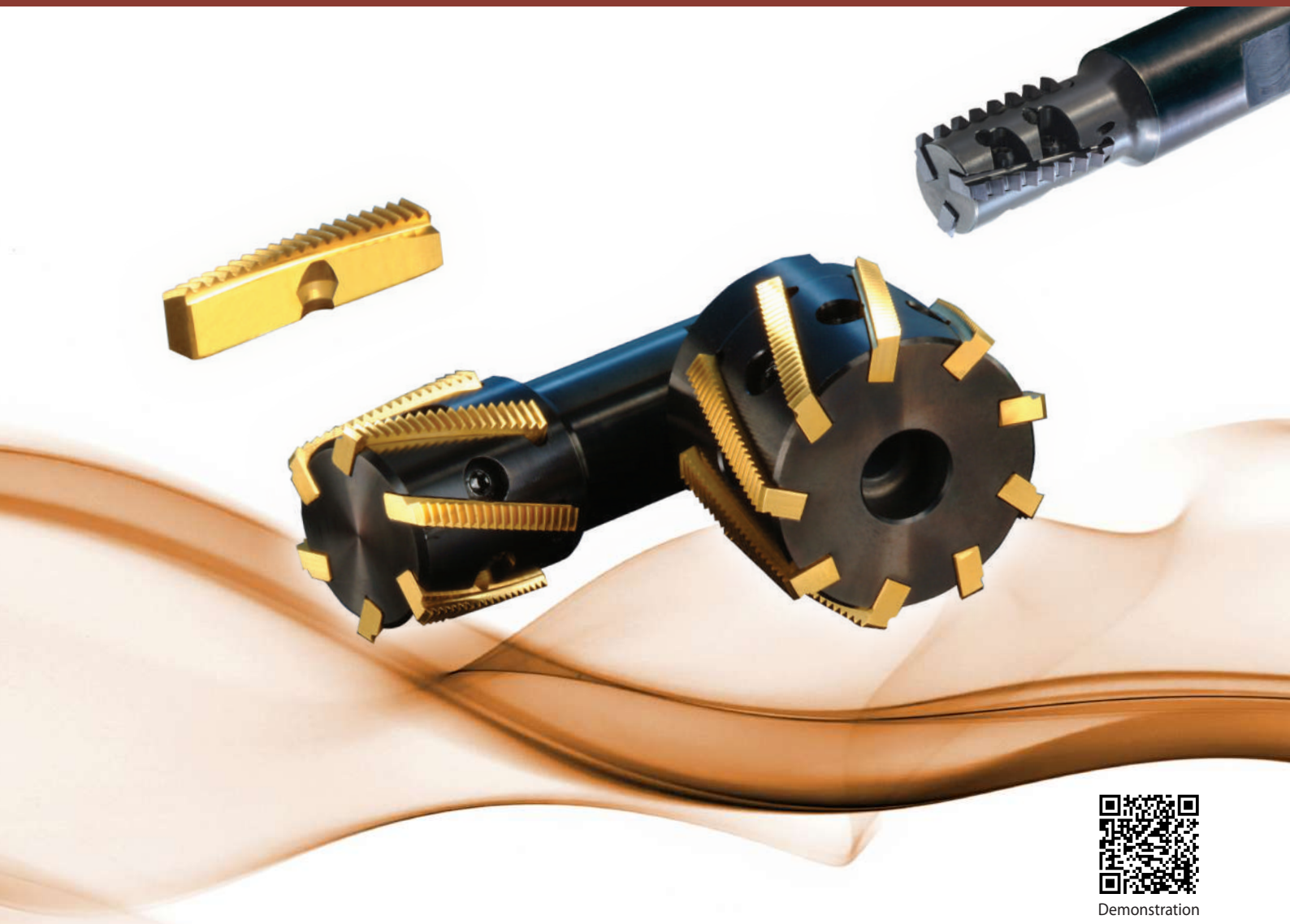

Demonstration

Advantages of Spiral Mill-Thread Tools

- The spiral designed tools enable a smooth cutting operation at a high feed rate and reduced machining time.
- The tools suit a wide range of applications, from machining small components in small machining centers to heavy-duty applications in high power milling machines.
- Spiral fluted toolholders hold 1 to 9 inserts in a comparatively small cutting diameter.
- The unique clamping method enables optimal indexability.
- Spiral tools reduce vibration and chatter.
- High grade finish is achieved in all applications: threading, end milling roughing and finishing.
- Inserts are available in MT7 Sub-Micron Grade with Titanium Aluminum Nitride multi-layer coating (ISO K10 - K20). This is a general purpose grade, which can be used with all materials.

Contents:	Page:	Contents:	Page:
Product Identification	2	NPTF	7
ISO	3	NPS	7
UN	4-5	Spiral Finishing Inserts	8
Whitworth	5	Toolholders	9-10
BSPT	6	Special Tools	11
NPT	6	Case Studies	12

Product Identification - Ordering Codes

Spiral Mill - Thread Inserts

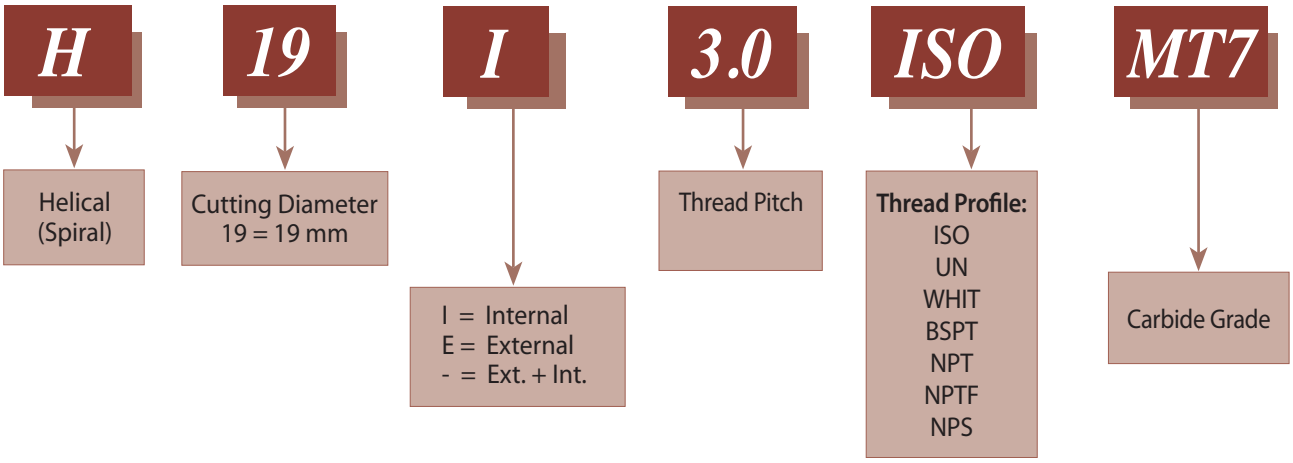

Spiral Mill - Thread Toolholders

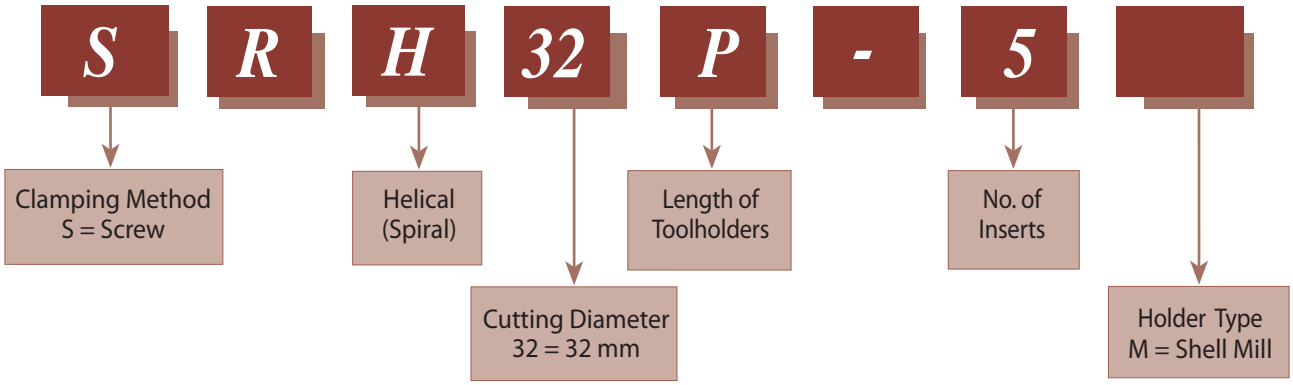

ISO

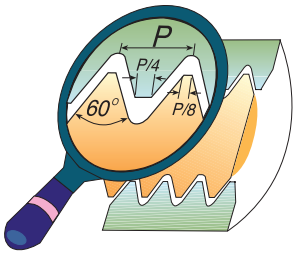

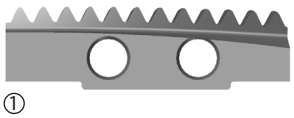
①


②

Insert Size	Fig.	Pitch mm	Ext./ Int.	M coarse	M fine	Ordering code	Toolholder
H13	1	1.0	Int.		≥ 15	H13 I 1.0 ISO	SRH13…
		1.5	Int.		≥ 16	H13 I 1.5 ISO	
		2.0	Int.	M16	≥ 17	H13 I 2.0 ISO	
H15	1	1.0	Int.		≥ 17	H15 I 1.0 ISO	SRH15…
		1.5	Int.		≥ 18	H15 I 1.5 ISO	
		2.0	Int.		≥ 19	H15 I 2.0 ISO	
		2.5	Int.	M18	≥ 20	H15 I 2.5 ISO	
H17	1	1.0	Int.		≥ 19	H17 I 1.0 ISO	SRH17…
		1.5	Int.		≥ 20	H17 I 1.5 ISO	
		2.0	Int.		≥ 21	H17 I 2.0 ISO	
		2.5	Int.	M20, M22	≥ 22	H17 I 2.5 ISO	
H19	1	1.5	Int.		≥ 22	H19 I 1.5 ISO	SRH19…
		2.0	Int.		≥ 23	H19 I 2.0 ISO	
		3.0	Int.	M24, M27	≥ 25	H19 I 3.0 ISO	
H23	2	1.0	Ext.			H23 E 1.0 ISO	SRH23…
		1.0	Int.		≥ 25	H23 I 1.0 ISO	
		1.5	Ext.			H23 E 1.5 ISO	
		1.5	Int.		≥ 26	H23 I 1.5 ISO	
		2.0	Ext.			H23 E 2.0 ISO	
		2.0	Int.		≥ 27	H23 I 2.0 ISO	
		3.0	Ext.			H23 E 3.0 ISO	
		3.0	Int.		≥ 29	H23 I 3.0 ISO	
		3.5	Int.	M30, M33	≥ 30	H23 I 3.5 ISO	
		4.0	Int.	M36	≥ 31	H23 I 4.0 ISO	
H28	2	4.0	Int.	M36, M39	≥ 40	H28 I 4.0 ISO	SRH28…
H32	2	1.0	Int.		≥ 34	H32 I 1.0 ISO	SRH32...
		1.5	Ext.			H32 E 1.5 ISO	
		1.5	Int.		≥ 35	H32 I 1.5 ISO	
		2.0	Ext.			H32 E 2.0 ISO	
		2.0	Int.		≥ 36	H32 I 2.0 ISO	
		3.0	Ext.			H32 E 3.0 ISO	
		3.0	Int.		≥ 38	H32 I 3.0 ISO	
		3.5	Int.		≥ 39	H32 I 3.5 ISO	
		4.0	Ext.			H32 E 4.0 ISO	
		4.0	Int.	M39	≥ 40	H32 I 4.0 ISO	
		4.5	Int.	M42, M45	≥ 41	H32 I 4.5 ISO	
		5.0	Int.	M48	≥ 42	H32 I 5.0 ISO	
H45	2	1.5	Ext.			H45 E 1.5 ISO	SRH45...
		1.5	Int.		≥ 48	H45 I 1.5 ISO	
		2.0	Ext.			H45 E 2.0 ISO	
		2.0	Int.		≥ 49	H45 I 2.0 ISO	
		3.0	Int.		≥ 51	H45 I 3.0 ISO	
		3.5	Int.		≥ 52	H45 I 3.5 ISO	
		4.0	Int.		≥ 53	H45 I 4.0 ISO	
		4.5	Int.		≥ 54	H45 I 4.5 ISO	
		5.0	Int.	M52	≥ 55	H45 I 5.0 ISO	
		5.5	Int.	M56, M60	≥ 56	H45 I 5.5 ISO	
		6.0	Int.	M64, M68	≥ 57	H45 I 6.0 ISO	
H63	2	1.5	Int.		≥ 66	H63 I 1.5 ISO	SRH63...
		2.0	Int.		≥ 67	H63 I 2.0 ISO	
		3.0	Int.		≥ 69	H63 I 3.0 ISO	
		4.0	Int.		≥ 71	H63 I 4.0 ISO	
		6.0	Int.		≥ 75	H63 I 6.0 ISO	

UN

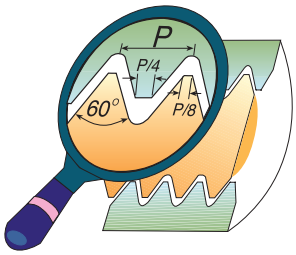

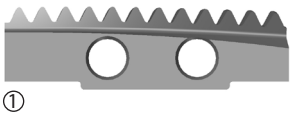
①


②

Insert Size	Fig.	Pitch TPI	Ext./ Int.	UN	UNC	UNF	UNS	Ordering code	Toolholder
H13	1	16	Int.	5/8, 11/16				H13 I 16 UN	SRH13...
		14	Int.				5/8	H13 I 14 UN	
		12	Int.	11/16				H13 I 12 UN	
H15	1	16	Int.			3/4		H15 I 16 UN	SRH15...
		14	Int.				3/4	H15 I 14 UN	
		12	Int.	3/4, 13/16				H15 I 12 UN	
		10	Int.		3/4		7/8 , 1	H15 I 10 UN	
H17	1	20	Int	1 1/16, 1 1/8		*13/16 - 1		H17 I 20 UN	SRH17...
		16	Int.	13/16 - 1				H17 I 16 UN	
		14	Int.			7/8 , 1		H17 I 14 UN	
		12	Int.	7/8				H17 I 12 UN	
		9	Int.		7/8			H17 I 9 UN	
H19	1	12	Int.	15/16		1		H19 I 12 UN	SRH19...
		8	Int.	1 1/16, 1 1/8	1			H19 I 8 UN	
H23	2	32	Int.	1			1 - 1 1/4	H23 I 32 UN	SRH23...
		24	Int.					H23 I 24 UN	
		20	Ext.					H23 E 20 UN	
		20	Int.	1 1/16 - 1 5/16				H23 I 20 UN	
		18	Ext.					H23 E 18 UN	
		18	Int.				1	H23 I 18 UN	
		16	Ext.					H23 E 16 UN	
		16	Int.	1 1/16 - 1 5/16				H23 I 16 UN	
		14	Ext.					H23 E 14 UN	
		14	Int.				≥1 1/8	H23 I 14 UN	
		12	Ext.					H23 E 12 UN	
		12	Int.	1 1/16 - 1 3/16		1 1/8		H23 I 12 UN	
		10	Ext.					H23 E 10 UN	
		10	Int.				≥1 1/8	H23 I 10 UN	
		8	Ext.					H23 E 8 UN	
		8	Int.	1 3/16 - 1 5/16				H23 I 8 UN	
		7	Ext.					H23 E 7 UN	
		7	Int.		1 1/4			H23 I 7 UN	
H28	2	12	Int.	1 5/16		1 1/4, 1 3/8		H28 I 12 UN	SRH28...
		8	Int.	1 3/8 - 1 7/16				H28 I 8 UN	
		6	Int.	1 7/16, 1 9/16	1 3/8, 1 1/2			H28 I 6 UN	
H32	2	24	Ext.				≥1 3/8	H32 E 24 UN	SRH32...
		20	Ext.					H32 E 20 UN	
		20	Int.	≥1 3/8				H32 I 20 UN	
		18	Ext.					H32 E 18 UN	
		18	Int.				≥1 3/4	H32 I 18 UN	
		16	Ext.					H32 E 16 UN	
		16	Int.	1 3/8 - 1 7/8				H32 I 16 UN	
		12	Ext.					H32 E 12 UN	
		12	Int.	1 7/16 - 1 7/8		1 1/2		H32 I 12 UN	
		8	Ext.					H32 E 8 UN	
		8	Int.	1 1/2 - 2				H32 I 8 UN	
		6	Ext.					H32 E 6 UN	
		6	Int.	1 5/8 - 1 7/8				H32 I 6 UN	
		5	Int.		1 3/4			H32 I 5 UN	
H40	2	6	Int.	1 15/16, 2				H40 I 6 UN	SRH40...
		4.5	Int.		2			H40 I 4.5 UN	

*Only UNEF

UN

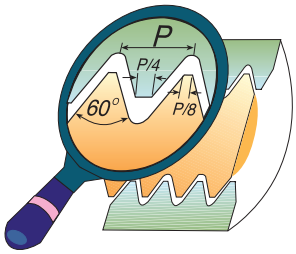

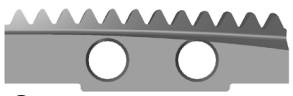
①

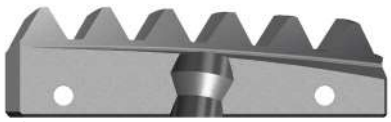
②

Insert Size	Fig.	Pitch TPI	Ext./ Int.	UN	UNC	UNF	UNS	Ordering code	Toolholder
H45	2	16	Int.	1 15/16 - 2 1/2			2 1/16 - 2	**H45 I 16 UN**	SRH45...
		12	Int.	1 15/16 - 2 5/8				**H45 I 12 UN**	
		8	Int.	2 1/8- 2 5/8				**H45 I 8 UN**	
		6	Int.	2 1/8- 2 3/4				**H45 I 6 UN**	
		4.5	Int.		2 1/4			**H45 I 4.5 UN**	
		4	Int.		2 1/2- 2 3/4			**H45 I 4 UN**	
H63	2	16	Int.	≥2 5/8				**H63 I 16 UN**	SRH63...
		12	Int.	≥2 3/4				**H63 I 12 UN**	
		8	Int.	≥2 3/4				**H63 I 8 UN**	
		6	Int.	≥2 7/8				**H63 I 6 UN**	
		4	Int.		≥3			**H63 I 4 UN**	

Whitworth

Same insert for internal and external thread

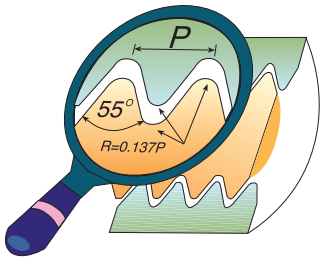

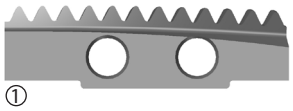
①


②

Insert Size	Fig.	Pitch TPI	Ordering code	Thread Size	Toolholder
H13	1	19	**H13- 19 W**	G 3/8	SRH13...
H15	1	14	**H15- 14 W**	G 1/2	SRH15...
H17	1	14	**H17- 14 W**	G 1/2 - 5/8	SRH17...
		11	**H17- 11 W**	G ≥ 1"	
H19	1	14	**H19- 14 W**	G 3/4 - 7/8	SRH19...
		11	**H19- 11 W**	G ≥ 1"	
H23	2	14	**H23-14 W**	Int. G 7/8" Ext. ≥ G 1/2"	SRH23...
		11	**H23-11 W**	≥ G1"	
H32	2	14	**H32-14 W**	Ext. ≥ G 1/2"	SRH32...
		11	**H32-11 W**	Int. ≥ G 1 1/8" Ext. ≥ G 1"	
H45	2	11	**H45-11 W**	Int. ≥ G 1 3/4" Ext. ≥ G 1"	SRH45...
H63	2	11	**H63-11 W**	Int. ≥ G 2 1/2" Ext. ≥ G 1"	SRH63...

BSPT

Same insert for internal and external thread

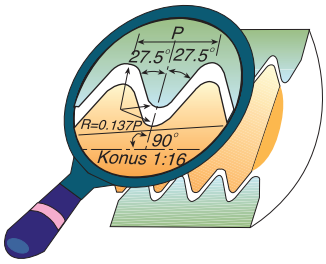

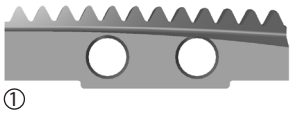
①

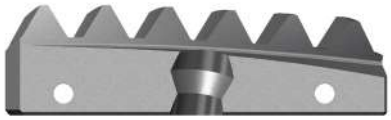
②

Insert Size	Fig.	Pitch TPI	Ordering code	Thread Size	Toolholder
H13	1	19	**H13-19 BSPT**	3/8	SRH13...
H15	1	14	**H15-14 BSPT**	1/2 - 3/4	SRH15...
H17	1	14	**H17-14 BSPT**	1/2 - 3/4	SRH17...
H23	2	11	**H23-11 BSPT**	≥ 1"	SRH23...
H32	2	11	**H32-11 BSPT**	Int. ≥ 1 1/8" Ext. ≥ 1"	SRH32...
H45	2	11	**H45-11 BSPT**	Int. ≥ 1 3/4" Ext. ≥ 1"	SRH45...
H63	2	11	**H63-11 BSPT**	Int. ≥ 2 1/2" Ext. ≥ 1"	SRH63...

NPT

Same insert for internal and external thread

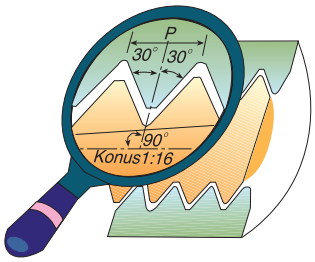

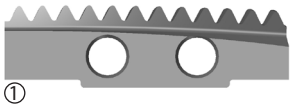
①


②

Insert Size	Fig.	Pitch TPI	Ordering code	Thread Size	Toolholder
H13	1	18	**H13-18 NPT**	3/8	SRH13...
H15	1	14	**H15-14 NPT**	1/2 - 3/4	SRH15...
H17	1	14	**H17-14 NPT**	1/2 - 3/4	SRH17...
H23	2	11.5	**H23-11.5 NPT**	1"-2"	SRH23...
H32	2	14	**H32-14 NPT**	Ext. 1/2" - 3/4"	SRH32...
		11.5	**H32-11.5 NPT**	Int. 1 1/4"-2" Ext. 1"- 2"	
H45	2	11.5	**H45-11.5 NPT**	Int. ≥ 2" Ext. ≥ 1"	SRH45...
		8	**H45- 8 NPT**	≥ 2 1/2"	
H63	2	11.5	**H63-11.5 NPT**	Ext. 1-2"	SRH63...
		8	**H63- 8 NPT**	≥ 3"	

NPTF

Same insert for internal and external thread

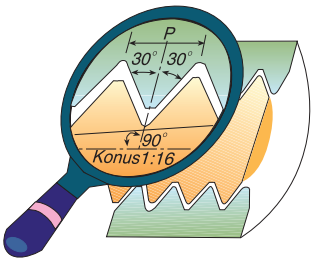

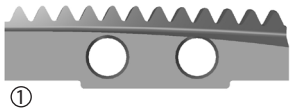
①

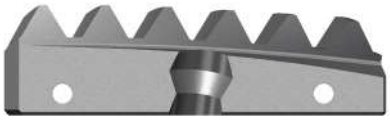
②

Insert Size	Fig.	Pitch TPI	Ordering code	Thread Size	Toolholder
H13	1	18	**H13-18 NPTF**	3/8	SRH13...
H15	1	14	**H15-14 NPTF**	1/2 - 3/4	SRH15...
H17	1	14	**H17-14 NPTF**	1/2 - 3/4	SRH17...
H23	2	11.5	**H23-11.5 NPTF**	1"-2"	SRH23...
H32	2	11.5	**H32-11.5 NPTF**	Int. 1 1/4"-2" Ext. 1" -2"	SRH32...

NPS

Same insert for internal and external thread

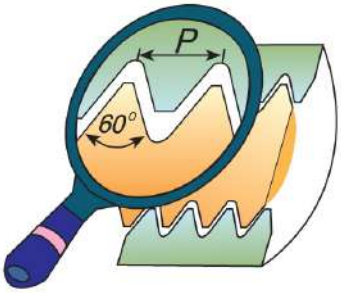

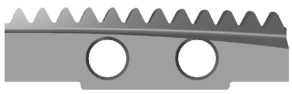

Insert Size	Pitch TPI	Ordering code	Thread Size	Toolholder
H13	18	**H13- 18 NPS**	3/8	SRH13...
H15	14	**H15- 14 NPS**	1/2 - 3/4	SRH15...
H17	14	**H17- 14 NPS**	1/2 - 3/4	SRH17...

Spiral Finishing Inserts

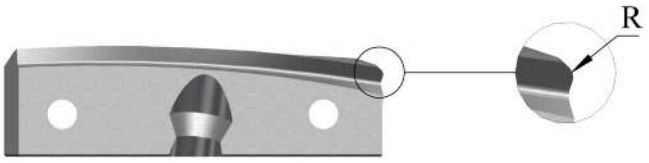

Insert Size	R	Ordering code	Toolholder
H23	0.2	**H23 F R 0.2**	SRH23...
	0.5	**H23 F R 0.5**	
	1.0	**H23 F R 1.0**	
H32	0.2	**H32 F R 0.2**	SRH32...
	0.5	**H32 F R 0.5**	
	1.0	**H32 F R 1.0**	
H45	0.2	**H45 F R 0.2**	SRH45...
	0.5	**H45 F R 0.5**	
	1.0	**H45 F R 1.0**	
	1.5	**H45 F R 1.5**	
	2.0	**H45 F R 2.0**	
H63	0.2	**H63 F R 0.2**	SRH63...
	0.5	**H63 F R 0.5**	
	1.0	**H63 F R 1.0**	
	1.5	**H63 F R 1.5**	
	2.0	**H63 F R 2.0**	

Toolholders

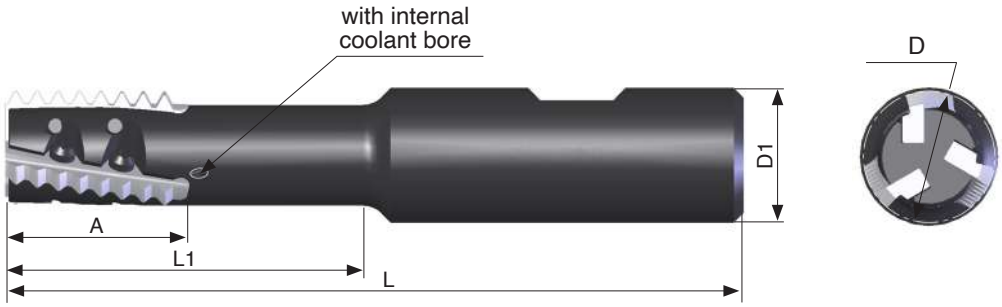

Ordering Code	Insert Type	Insert size A	D	D1	L	L1	No. of Inserts	Screw	Key
SRH13S-1	H13	27	13	20	80	26	1	S13	K11
SRH13-1	H13	27	13	20	90	35	1	S13	K11
SRH15-1	H15	27	15	20	95	40	1	S15	K11
*** SRH17-2**	H17	27	17	20	85	30	2	S17	K11
*** SRH17J-2**	H17	27	17	20	100	45	2	S17	K11
SRH19-2	H19	27	19	20	85	30	2	S19	K11
SRH19J-2	H19	27	19	20	110	55	2	S19	K11
SRH19-3	H19	27	19	20	85	30	3	S19	K11
SRH19J-3	H19	27	19	20	110	55	3	S19	K11

* When using NPT, NPTF, BSPT inserts the cutting diameter D = 18 mm

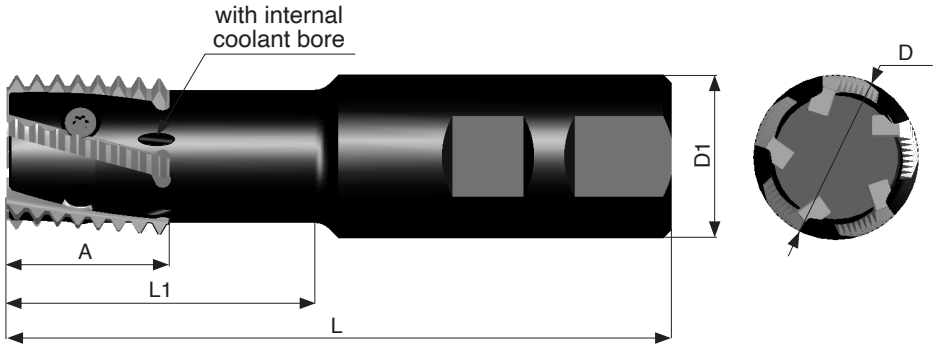

Ordering Code	Insert Type	Insert size A	D	D1	L	L1	No. of Inserts	Screw	Key
SRH23-2	H23	27	23	25	110	50	2	S23	K21
SRH23M-2	H23	27	23	25	150	75	2	S23	K21
SRH28-3	H28	32	28	32	150	75	3	S32S	K22
SRH32-5	H32	32	32	32	130	60	5	S32	K22
SRH32P-5	H32	32	32	32	180	90	5	S32	K22

Spiral Mill - Thread Toolholders

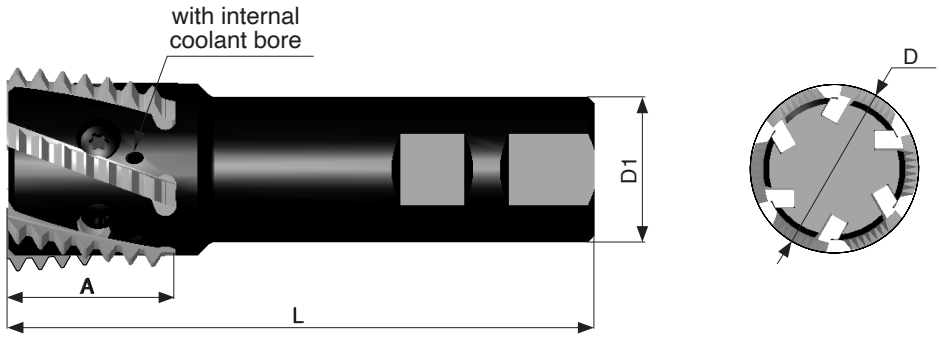

Ordering Code	Insert Type	Insert size A	D	D1	L	No. of Inserts	Screw	Key
SRH40-4	H40	37	40	32	180	4	S45S	K40
SRH45-6	H45	37	45	32	130	6	S45	K40

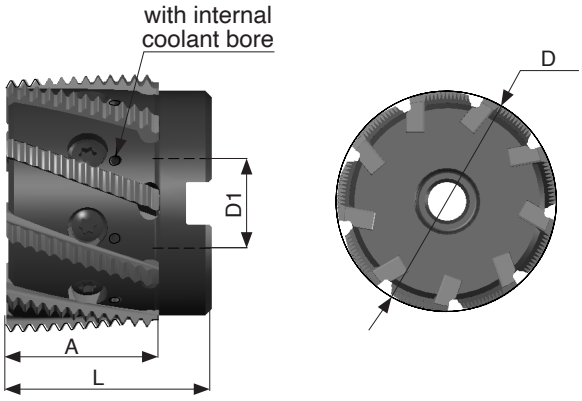

Ordering Code	Insert Type	Insert size A	D	D1	L	No. of Inserts	Screw	Key
SRH32-5M	H32	32	32	16	52	5	S32S	K22
SRH45-6M	H45	37	45	22	60	6	S45S	K40
SRH63-9	H63	38	63	22	50	9	S63	K40

Special Tools

In addition to standard products, CPT manufactures special tools and inserts according to customers' requests.
The toolholders are multi-purpose, making them suitable for both roughing and finishing inserts.
Special tools are supplied in short delivery times.



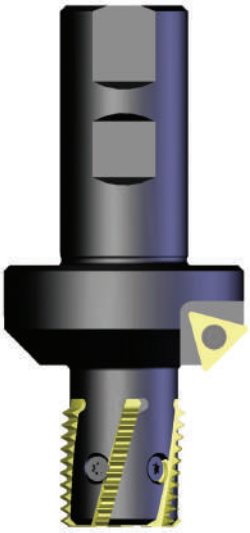

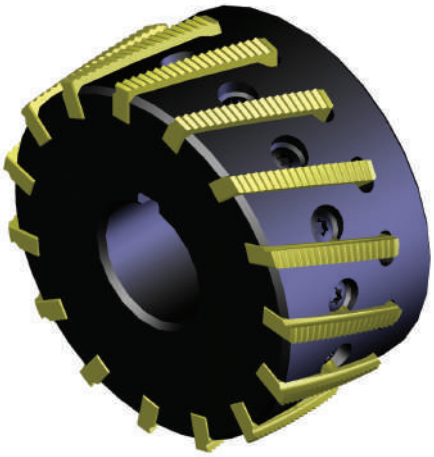









Case Studies

Case Study no. 1

Thread	M56x1.5
Internal/External	Internal
Thread Length	33.0
Raw Material	Ductile Iron
Cutting Speed – Vc	130 m/min
Tooth Load – Fz	0.15 mm/tooth
Toolholder	SRH45 – 6
Insert	H45 I 1.5 ISO MT7
Result	600 pcs with 0.02 offset (Competitor – 40 pcs with 0.15 offset)



Case Study no. 2

Application	Grooves Milling
Internal/External	External
Raw Material	Cast Steel
Cutting Speed – Vc	195 m/min
Tooth Load – Fz	0.10 mm/tooth
Toolholder	SRH63 – 9
Insert	Taylor Made H63
Result	1350 pcs (Competitor – 540 pcs)

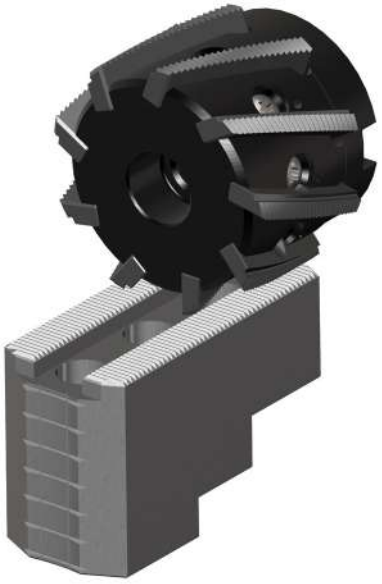

D-Thread

B05



Demonstration

Mill-Thread Inserts and Toolholders for machining deep threads

- Improved productivity due to multi-insert toolholders.
- Partial Profile, standard or U-Type inserts for a wide range of threads.
- Inserts with three cutting edges, reduces tooling costs.
- Low cutting resistance due to the single point inserts.
- Holder allows for a long overhang and includes internal coolant.
- Same insert and toolholder for both external and internal thread.

Contents: Page:

Standard Toolholders and Inserts	2
U-Type Toolholders and Inserts	3-4

D-Thread *Mill-Thread Inserts & Toolholders for machining deep threads*

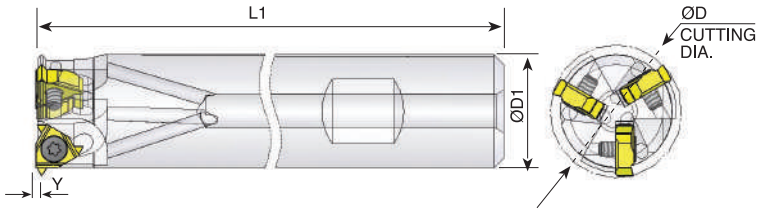

Ordering Code	Insert Size		Y	D	D1	L1	No. of Inserts	Insert Screw	Torx Key
	L	I.C							
SR0023Q11	11	1/4	1	23.5	20	190	3	SE11	K11

Partial 60° Size 11

Ordering Code		Pitch	
		mm	TPI
11 60D	**INT.**	1.0 - 2.0	24 - 12
	EX.	0.75 - 1.5	32 - 14

Partial 55° Size 11

Ordering Code		Pitch TPI
11 55D	**INT./EX.**	24 - 14

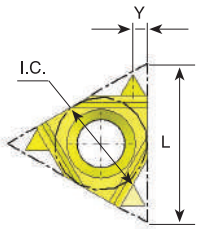

Coated Grade: BMA

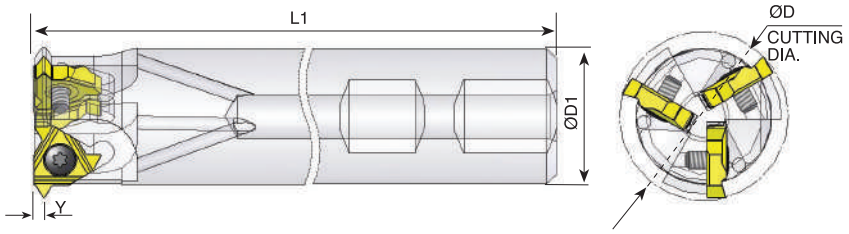

Ordering Code	Insert Size		Y	D	D1	L1	No. of Inserts	Insert Screw	Torx Key
	L	I.C							
SR0031R16	16	3/8	1.8	31	25	225	3	SE16	K16

Partial 60° Size 16

Ordering Code		Pitch	
		mm	TPI
16 60D	**INT.**	2.5 - 3.5	10 - 7
	EX.	2.0 - 3.0	12 - 8

Partial 55° Size 16

Ordering Code		Pitch TPI
16 55D	**INT./EX.**	12 - 8

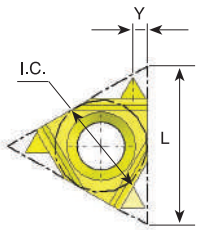

Coated Grade: BMA

D-Thread *Mill-Thread Inserts & Toolholders for machining deep threads*



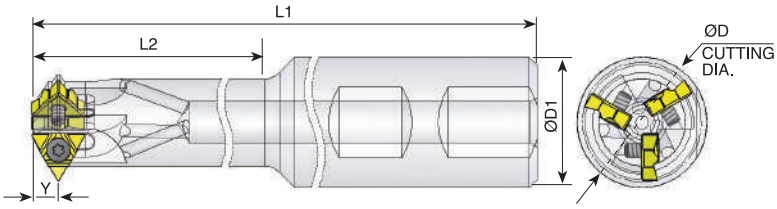

Ordering Code	Insert Size		Y	D	D1	L1	L2	No. of Inserts	Insert Screw	Torx Key
	L	I.C								
***SR0015M11U**	11U	1/4U	5	14.8	16	150	55	1	SE11	K11
****SR0021M11U**	11U	1/4U	5	20.6	25	150	65	2	SE11	K11
SR0023M11U	11U	1/4U	5	23	25	150	88	3	SE11	K11

* Pitch limitations: for partial 60° - INT. - 10-9 TPI, EX. -12 - 10 TPI; for partial 55° - 12 - 9 TPI
** Pitch limitations: for partial 60° - INT. - 10-8 TPI, EX. -12 - 9 TPI; for partial 55° - 12 - 9 TPI

Partial 60˚ Size 11U

Ordering Code		Pitch	
		mm	TPI
11U 60D	**INT.**	2.5 - 4.0	10 - 6
	EX.	2.0 - 3.0	12 - 8
11U 60D-18-12	**INT.**	1.5 - 2.0	18 - 12
	EX.	1.25 - 1.75	20 - 14

Coated Grade: BMA

Partial 55˚ Size 11U

Ordering Code		Pitch TPI
11U 55D	**INT./EX.**	12 - 7

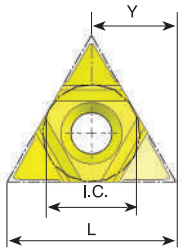

D-Thread *Mill-Thread Inserts & Toolholders for machining deep threads*

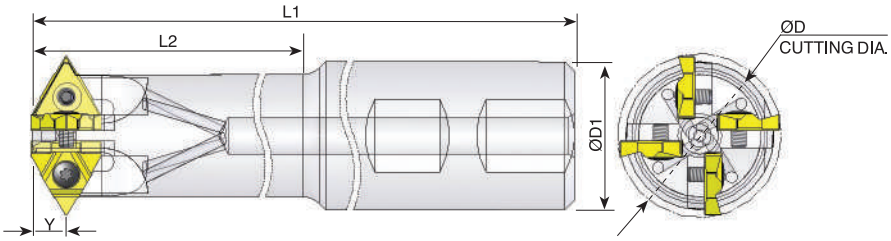

Ordering Code	Insert Size		Y	D	D1	L1	L2	No. of Inserts	Insert Screw	Torx Key
	L	I.C								
SR0035R16U	16U	3/8U	7.6	35.5	32	220	155	4	SE16	K16

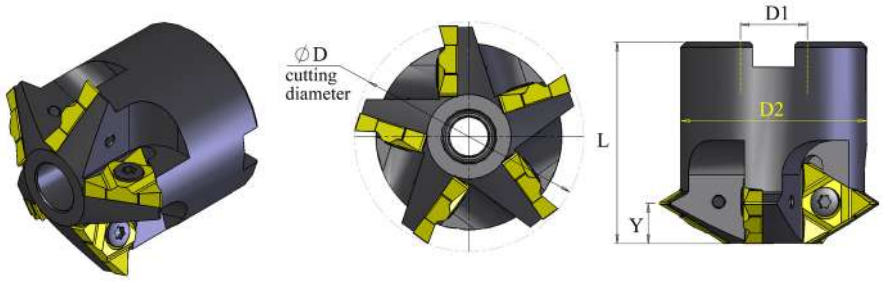

Ordering Code	Insert Size		Y	D	D1	D2	L	No. of Inserts	Insert Screw	Torx Key
	L	I.C								
SR0043B16U-5	16U	3/8U	7.6	43.4	16	35.3	38.1	5	SE16	K16

Partial 60˚ Size 16U

Ordering Code		Pitch	
		mm	TPI
16U 60D	**INT.**	4.0 - 6.0	6 - 4
	EX.	3.0 - 5.0	8 - 5
16U 60D-16-8	**INT.**	1.5 - 3.0	16 - 8
	EX.	1.5 - 2.5	18 - 10

Partial 55˚ Size 16U

Ordering Code		Pitch TPI
16U 55D	**INT./EX.**	6 - 4.5

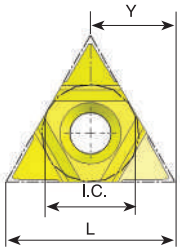

Coated Grade: BMA

Deep Reach Mill-Thread | B06



Demonstration

A Modular Line of Mill-Thread Toolholders

Contents:	Page:
Toolholders	2-4
Extensions	4

CPT presents a modular line of Mill-Thread toolholders

- CPT modular holders are ideal for deep reach applications.
- Unique clamping method enables optimal strength and indexability.
- Cost saving - Same shank can hold different heads.
- Toolholders with internal coolant bore.
- Screw connection allows long overhang.
- CPT standard thread milling inserts fit these toolholders.
- Different steel extensions are available.
- Toolholders are compatible with common toolholding systems.

Toolholders

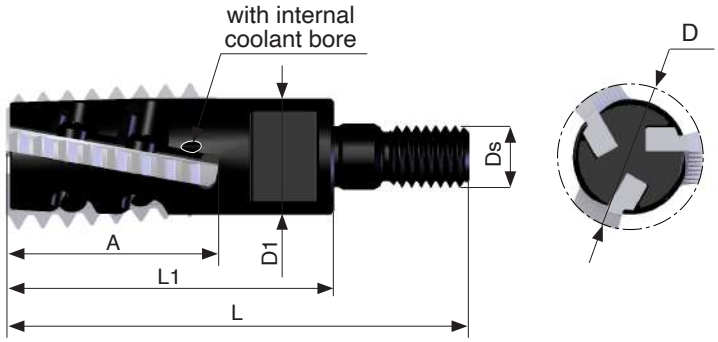

Ordering Code	Insert Type	Insert size A	D	D1	Ds	L1	L	No. of Inserts	Screw	Key
SRH19-3 S	H19	27	19	15	M8	42.5	60	3	S19	K11

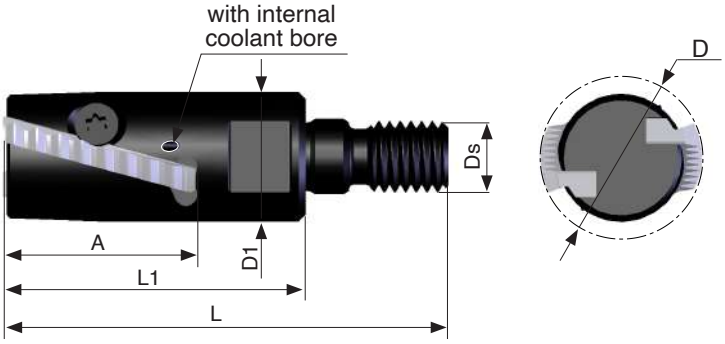

Ordering Code	Insert Type	Insert size A	D	D1	Ds	L1	L	No. of Inserts	Screw	Key
SRH23-2 S	H23	27	23	18	M10	42.5	62.5	2	S23	K16

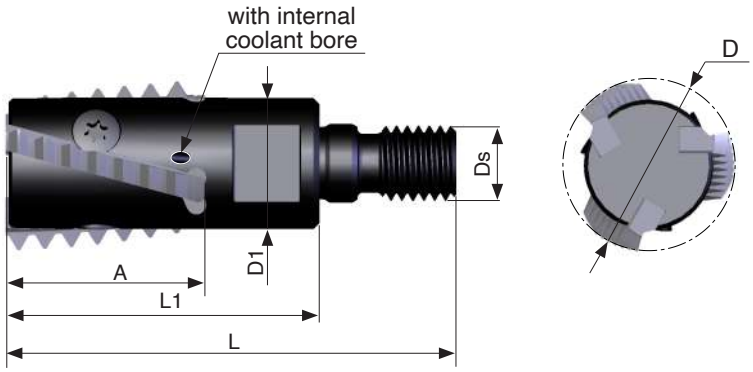

Ordering Code	Insert Type	Insert size A	D	D1	Ds	L1	L	No. of Inserts	Screw	Key
SRH28-3 S	H28	32	28	21	M12	50	72	3	S28	K16

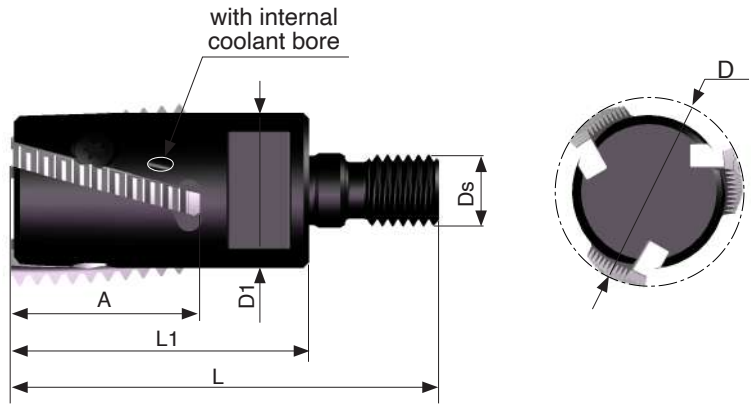

Ordering Code	Insert Type	Insert size A	D	D1	Ds	L1	L	No. of Inserts	Screw	Key
SRH32-3 S	H32	32	32	26	M12	50	72	3	S32S	K16

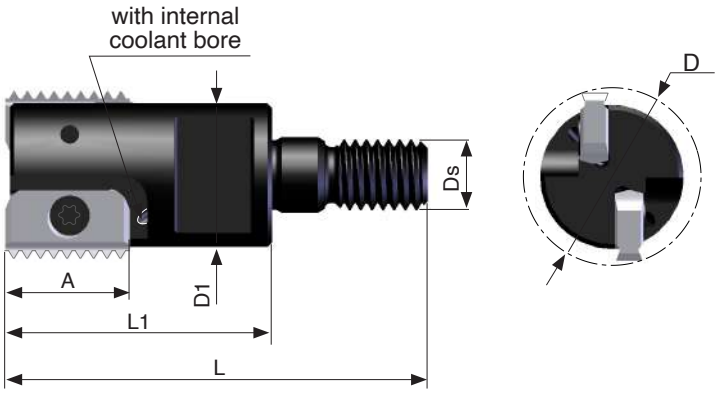

Ordering Code	Insert Type	Insert size A	D	D1	Ds	L1	L	No. of Inserts	Screw	Key
SR0020C14-2 S	MT14	14	20	16	M8	30.5	48	2	S14	K14

Toolholders

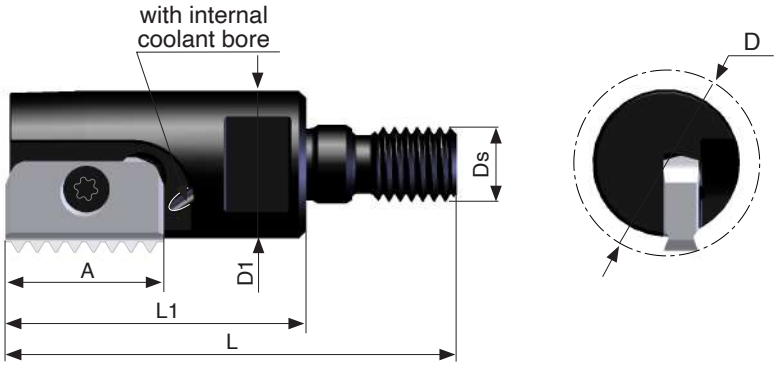

Ordering Code	Insert Type	Insert size A	D	D1	Ds	L1	L	No. of Inserts	Screw	Key
SR0025D21-1 S	MT21	21	25	19.7	M10	40	60	1	S21	K21

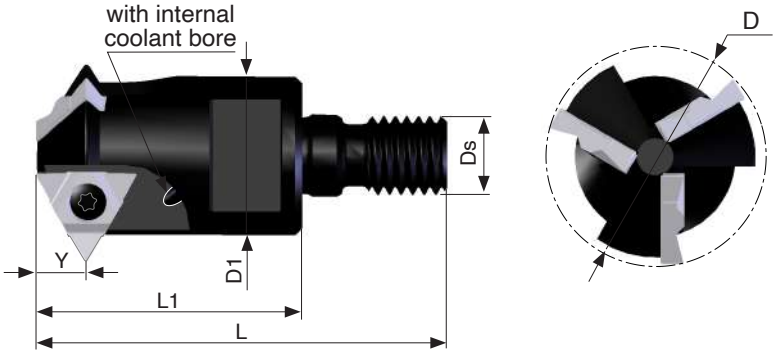

Ordering Code	Insert Type	Insert size		Y	D	D1	Ds	L1	L	No. of Inserts	Screw	Key
		L	I.C.									
SR0033D16U-3 S	16U	16U	3/8U	7.6	33	24	M12	40	60	3	S16	K16

Extensions

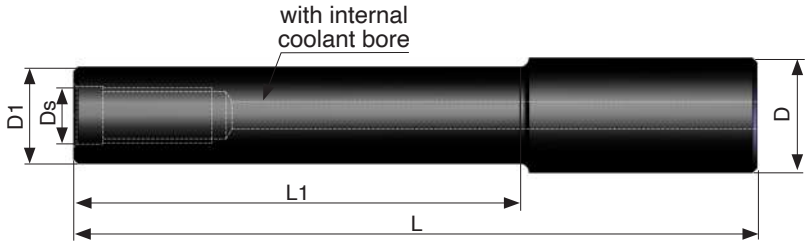

Ordering Code	D	D1	Ds	L	L1
E16 M08 L80	16	15	M08	80	30
E20 M10 L80	20	18	M10	80	30
E20 M10 L130	20	18	M10	130	80
E25 M12 L100	25	21	M12	100	50
E25 M12 L150	25	21	M12	150	100

CMT Vertical Milling | B07



Demonstration

Vertical milling indexable inserts and toolholders to perform a wide variety of threads, grooves, chamfers and more.

Advantages of CMT - Vertical Milling

- Ground profile inserts for high precision and excellent performance.
- Working at high machining parameters, with high surface quality.
- Solid and accurate clamping method enables full repeatability.
- Same insert for right-hand or left-hand threads.
- Toolholders include weldon shank and coolant bore.
- Chamfer inserts are also available.

Contents:

	Page:
Introduction: CMT Vertical Milling	2
Product Identification	3-4
Inserts	5-21
Partial Profile 60° - ISO, UN	5-6
Partial Profile 60° - NPT	6
Partial Profile 55° - BSP(G), BSF, BSW	7
Full Profile - ISO	8-9
Full Profile - UN	10-11
G 55° BSW, BSF, BSP	12
Trapez - DIN 103	12
Acme	13
Round – DIN 405	13
Chamfering and Grooving	14
Chamfering, Grooving and Boring	14
Dovetail 45°	15
Groove Milling	15-19
Face Milling and Finishing	19
Corner Rounding	20
Front and Back Corner Rounding	21
Toolholders	22-23
Steel Toolholders	22
Carbide Shank Toolholders	23
CMT Multi Insert Milling Cutters	24
Product Identification	25
Groove Milling	26-27
Chamfering	27
Partial Profile 60° - ISO, UN	28
Toolholders	29-30
Milling Cutter – Arbor	29
Milling Cutter – Shell Mill	29
Milling Cutter – Weldon Shank	30
Milling Cutter – Disc Milling	30

CMT
Vertical Milling

Advantages

- Ground profile inserts for high precision and excellent performance.
- Working at high machining parameters, with high surface quality.
- Solid and accurate clamping method enables full repeatability.
- Same insert and holder for right-hand or left-hand threads.
- Toolholders include weldon shank and coolant bore.

CMT Straight Flute Inserts



Carbide Grade: MT7

Inserts are available in MT7 Sub-Micron Grade with Titanium Aluminum Nitride multi-layer coating (ISO K10 - K20). This is a general purpose grade, covering a very wide range of materials.

CMT Spiral Multi Flute Inserts

- Multi flute: 4-8 cutting edges
- Spiral flute for smooth cutting

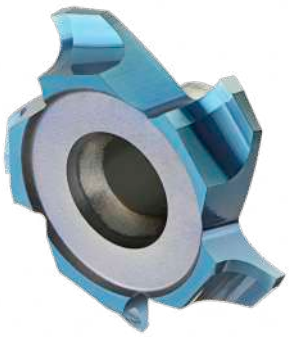

The new cutters are designed for large range of materials including hardened steel up to 62 HRc.

Advantages

- Longer tool life
- High material removal and higher feeds results increased productivity
- Excellent surface finish
- Reduced cycle time
- Low cutting forces due to the spiral multi flutes

Carbide Grade: MT8

Sub Micron grade with advanced PVD triple coating (ISO K10-K20).
Extremely high heat resistant and smooth cutting operation, high performance, for all machining conditions.

Product Identification - Ordering Codes

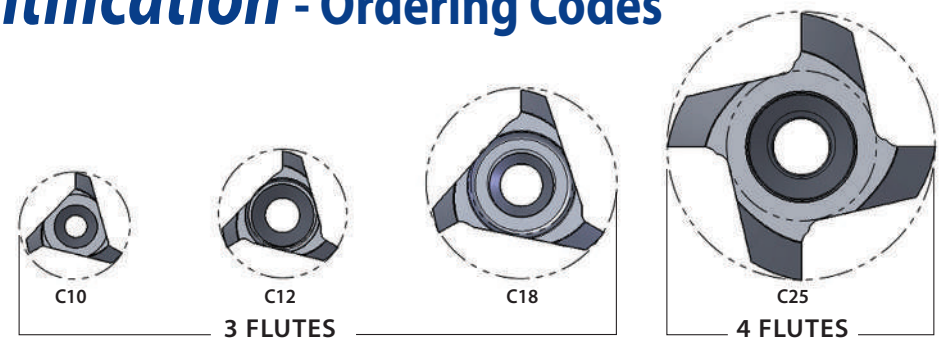

C	18	I	12	UN	MT7
CMT Line	Cutting Diameter 10 = 10.0 mm 12 = 12.0 mm 18 = 17.8 mm 25 = 25.0 mm	I = Internal	Thread Pitch A, D, G, N, Q = Partial Profile C = Chamfering and Grooving CR = Corner Rounding F = Face Milling and Finishing W = Grooving	Thread Profile 60° & 55° ISO UN Whitworth Trapez Acme Chamfering	Carbide Grade

CMT Spiral Multi Flute Inserts

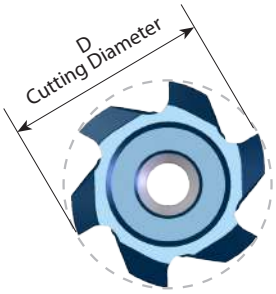

S	178	H	1.0	ISO	MT8
Spiral CMT line Multi flute	Cutting Diameter 178 = Ø17.8 mm 189 = Ø18.9 mm 200 = Ø20.0 mm 350 = Ø35.0 mm	Number of Flutes D = 4 E = 5 F = 6 H = 8	Thread Pitch G, N = Partial Profile H = Chamfering, Grooving and Boring W = Grooving R = Radius Groove Milling CR = Corner Rounding	Thread Profile Partial 60° & 55° ISO UN	Carbide Grade

Product Identification - Ordering Codes

CMT Toolholders

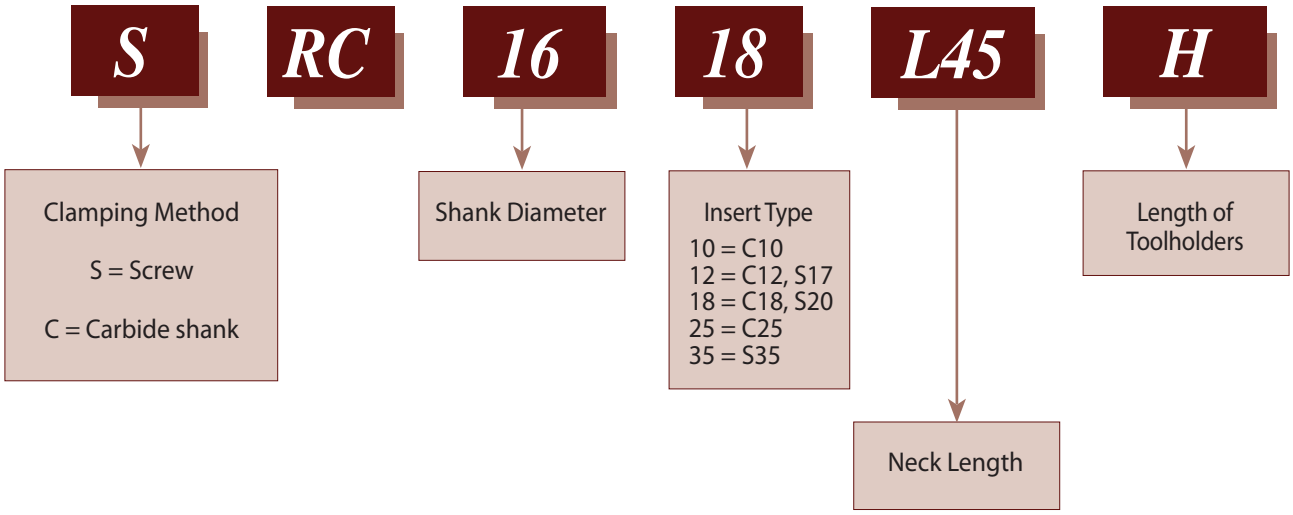

Partial Profile 60° - ISO, UN

Same insert for internal and external thread

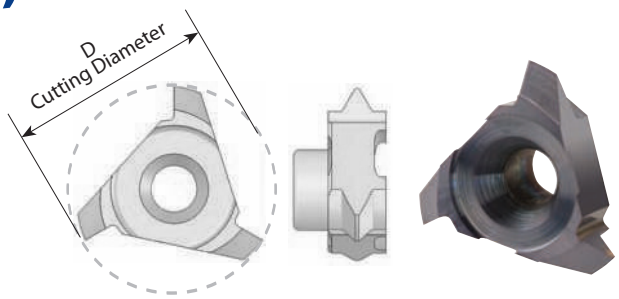

Insert Type	Ordering Code	Pitch Range mm	Pitch Range TPI	D	Thread Diameter (min) Pitch Low Range	Thread Diameter (min) Pitch High Range	Holder Code*
C10	**C10 A60**	Int. 0.5 - 0.8	56 - 28	10.0	Ø ≥ 11	Ø ≥ 12	H1, 1.1, 2, 15, 16, 17
		Ex. 0.4 - 0.8	64 - 32				
	C10 G60	Int. 1.0 - 2.0	28 - 13	10.0	Ø ≥ 12	Ø ≥ 14	H1, 2, 15, 17
		Ex. 0.8 - 1.75	32 - 15				
C12	**C12 A60**	Int. 0.5 - 0.8	56 - 28	12.0	Ø ≥ 13	Ø ≥ 14	H3, 3.1, 4, 5, 18, 19, 20
		Ex. 0.4 - 0.8	64 - 32				
	C12 G60	Int. 1.0 - 2.0	28 - 13	12.4	Ø ≥ 14	Ø ≥ 16	H3, 4, 5, 18, 19, 20
		Ex. 0.8 - 1.75	32 - 15				
	C12 AG60	Int. 1.5 - 2.5	18 - 11	12.4	Ø ≥ 15	Ø ≥ 17	H3, 4, 5, 18, 20
		Ex. 1.25 - 2.0	24 - 13				
C18	**C18 A60**	Int. 0.5 - 0.8	56 - 28	17.8	Ø ≥ 19	Ø ≥ 19	H5.1, 5.2, 6, 7, 8, 9, 21, 22, 23
		Ex. 0.4 - 0.8	64 - 32				
	C18 G60	Int. 1.0 - 1.75	28 - 14	17.8	Ø ≥ 20	Ø ≥ 21	
		Ex. 0.8 - 1.5	32 - 16				
	C18 D60	Int. 2.0 - 3.0	13 - 8	17.8	Ø ≥ 21	Ø ≥ 23	
		Ex. 1.75 - 2.5	15 - 10				
C25	**C25 G60**	Int. 1.5 - 2.5	16 - 10	25.0	Ø ≥ 28	Ø ≥ 30	H10, 11, 24, 25
		Ex. 1.0 - 2.0	28 - 13				
	C25 N60	Int. 3.0 - 5.0	8 - 5	25.0	Ø ≥ 30	Ø ≥ 34	
		Ex. 2.5 - 4.5	10 - 6				
	C25 Q60	Int. 5.0 - 6.0	5 - 4	25.0	Ø ≥ 34	Ø ≥ 35	
		Ex. 4.5 - 5.0	6 - 5				

* For complete toolholder description see pages B07-22 and 23

Partial Profile 60° - ISO, UN

Same insert for internal and external thread

Multi Flute

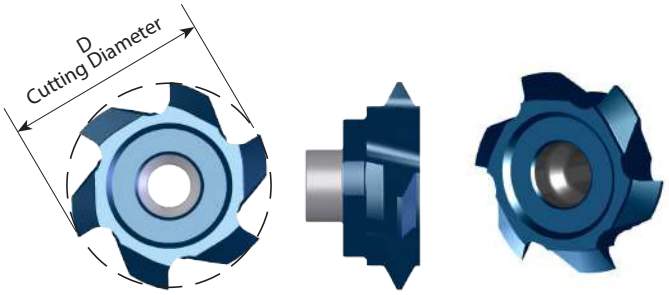

Insert Type	Ordering Code	Pitch Range mm	Pitch Range TPI	D	No. of Flutes	Thread Dia (min) Pitch Low range	Thread Dia (min) Pitch High range	Holder Code*
S17	**S160 F AG60**	Int. 1.0-3.5	28-7	16.0	6	Ø ≥ 20	Ø ≥ 22	H3, 3.1, 4, 5, 18, 19, 20
		Ex. 0.8-3.0	32-8.5					
S20	**S200 F G60**	Int. 1.5-2.5	16-10	20.0	6	Ø ≥ 23	Ø ≥ 25	H5.1, 5.2, 6, 7, 8, 9, 21, 22, 23
		Ex. 1.0-2.0	28-13					
	S200 D N60	Int. 3.0-5.0	8-5	20.0	4	Ø ≥ 25	Ø ≥ 29	H5.1, 5.2, 21
		Ex. 2.5-4.5	10-6					
S35	**S350 F N60**	Int. 3.0-5.0	8-5	35.0	6	Ø ≥ 38	Ø ≥ 40	H12, 13, 14, 26
		Ex. 2.5-4.5	10-6					
	S350 F Q60	Int. 5.0-6.0	5-4	35.0	6	Ø ≥ 40	Ø ≥ 44	H12, 13, 14, 26
		Ex. 4.5-5.0	6-5					

Partial Profile 60° - NPT

Same insert for internal and external thread

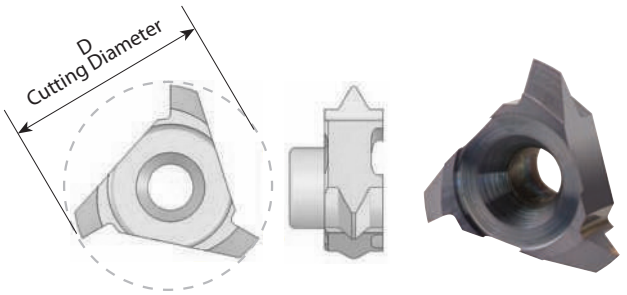

Insert Type	Ordering Code	Pitch TPI	Standard	D	Holder Code*
C10	**C10 18 NPT**	18	1/4 - 3/8	10.0	H1, 1.1, 2, 15, 17
C18	**C18 14 NPT**	14	1/2 - 3/4	15.8	H5.1, 5.2, 21
C25	**C25 11.5NPT**	11.5	1-2	25.0	H10, 11, 24, 25
	C25 8 NPT	8	≥ 2 1/2	25.0	

* For complete toolholder description see pages B07-22 and 23

Partial Profile 55° - BSP(G), BSF, BSW

Same insert for internal and external thread

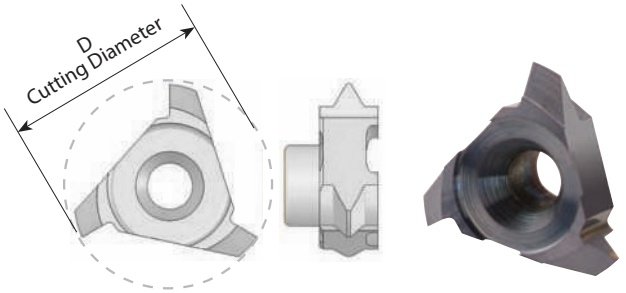

Insert Type	Ordering Code	Pitch Range TPI	D	Thread Dia. (min)	Holder Code*
C10	**C10 G55**	19-14	10.0	Ø ≥ 13	H1, 2, 15, 17
C12	**C12 G55**	28-19	12.0	Ø ≥ 14	H3, 3.1, 4, 5, 18, 19, 20
	C12 N55	14-11	12.2	Ø ≥ 16	H3, 4, 5,18, 20
C18	**C18 G55**	14-8	18.0	Ø ≥ 23	H5.1, 5.2, 21
C25	**C25 N55**	7-5	25.0	Ø ≥ 31	H10, 11, 24, 25

Partial Profile 55° - BSP(G), BSF, BSW

Same insert for internal and external thread

Multi Flute

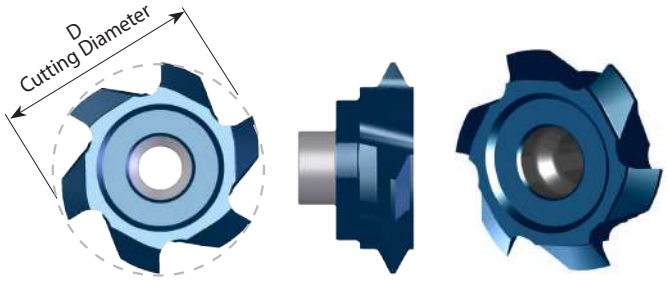

Insert Type	Ordering Code	Pitch Range TPI	D	No. of Flutes	Thread Dia (min)	Holder Code*
S17	**S170 F G55**	11-8	17.0	6	Ø ≥ 18.5	H3, 3.1, 4, 5, 18, 19, 20
S20	**S195 F G55**	14	19.5	6	Ø ≥ 23	H5.1, 5.2, 6, 7, 8, 9, 21, 22, 23
	S200 D N55	8-6	20.0	4	Ø ≥ 25	

* For complete toolholder description see pages B07-22 and 23

Full Profile - ISO

Inserts for internal thread

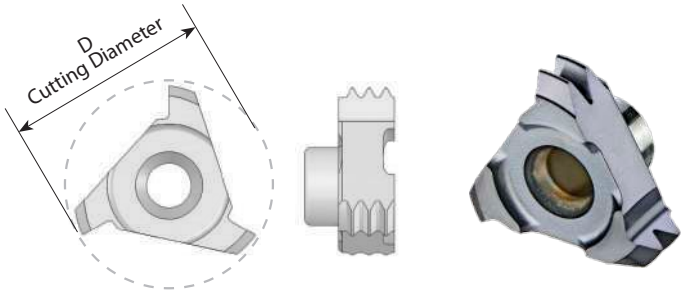

Insert Type	Ordering Code	Pitch mm	M coarse	M fine	Number of Teeth	D	Holder Code*
C10	C10 I 0.5 ISO	0.5		M10, M12	6	9.0	H1, 1.1, 2, 15, 16, 17
	C10 I 0.75 ISO	0.75		M12	4	10.0	
	C10 I 1.0 ISO	1.0		M12, M13	3	10.0	
	C10 I 1.5 ISO	1.5		M13, M14	2	10.0	
	C10 I 1.75 ISO	1.75	M12		1	9.6	H1, 2, 15, 17
	C10 I 2.0 ISO	2.0	M14	M18	1	10.0	
C12	C12 I 0.5 ISO	0.5		M13-M18	6	12.0	H3, 3.1, 4, 5, 18, 19, 20
	C12 I 0.75 ISO	0.75		M13-M18	4	12.0	
	C12 I 1.0 ISO	1.0		M14-M19	3	12.0	
	C12 I 1.5 ISO	1.5		M15-M19	2	12.0	
	C12 I 2.0 ISO	2.0	M16	M18, M20	1	12.4	
	C12 I 2.5 ISO	2.5	M18, M20		1	12.0	H3, 4, 5,18, 20
	C12 I 3.0 ISO	3.0	M24		1	12.4	
C18	C18 I 0.5 ISO	0.5		M19-M60	9	17.8	H5.1, 5.2, 6, 7, 8, 9, 21, 22, 23
	C18 I 0.75 ISO	0.75		M19-M60	6	17.8	
	C18 I 1.0 ISO	1.0		M20-M60	5	17.8	
	C18 I 1.5 ISO	1.5		M20-M60	3	17.8	
	C18 I 2.0 ISO	2.0		M21-M60	2	17.8	
	C18 I 2.5 ISO	2.5	M22		2	17.8	
	C18 I 3.0 ISO	3.0	M24, M27	M28-M60	1	17.8	
	C18 I 3.5 ISO	3.5	M30, M33		1	17.8	
C25	C25 I 3.0 ISO	3.0	M32, M33	M30-M80	2	25.0	H10, 11, 24, 25
	C25 I 3.5 ISO	3.5	M33		1	25.0	
	C25 I 4.0 ISO	4.0	M36, M39	M48-M80	1	25.0	
	C25 I 4.5 ISO	4.5	M42, M45		1	25.0	
	C25 I 5.0 ISO	5.0	M48, M52		1	25.0	
	C25 I 5.5 ISO	5.5	M56, M60		1	25.0	
	C25 I 6.0 ISO	6.0	M64, M68	M70-M80	1	25.0	

* For complete toolholder description see pages B07-22 and 23

Full Profile - ISO

Inserts for internal thread

Multi Flute

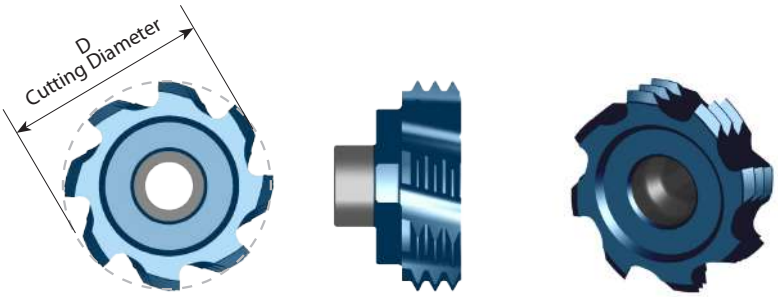

Insert Type	Ordering Code	Pitch mm	M coarse	M fine	Number of Teeth	D	No. of Flutes	Holder Code*
S17	**S160 F 2.5 ISO**	2.5	M20		1	16.0	6	H3, 3.1, 4, 5, 18, 19, 20
S20	**S163 H 1.0 ISO**	1.0		M18-M60	5	16.3	8	H5.1, 5.2, 6, 7, 8, 9, 21, 22, 23
	S175 H 1.5 ISO	1.5		M20-M60	3	17.5	8	
	S186 F 2.0 ISO	2.0		M22-M60	2	18.6	6	
	S178 F 2.5 ISO	2.5	M22		2	17.8	6	
	S189 F 3.0 ISO	3.0	M24, M27	M28-M60	1	18.9	6	
	S200 F 3.5 ISO	3.5	M30, M33		1	20.0	6	
	S200 F 4.0 ISO	4.0	M36, M39	M40-M60	1	20.0	6	
	S200 E 4.5 ISO	4.5	M42		1	20.0	5	
	S200 D 5.0 ISO	5.0	M48, M52		1	20.0	4	
S35	**S350 F 4.5 ISO**	4.5	M45	M54	1	35.0	6	H12, 13, 14, 26
	S350 F 6.0 ISO	6.0	M64, M68		1	35.0	6	
	S350 F 8.0 ISO	8.0		M130-M200	1	35.0	6	

* For complete toolholder description see pages B07-22 and 23

Full Profile - UN

Inserts for internal thread

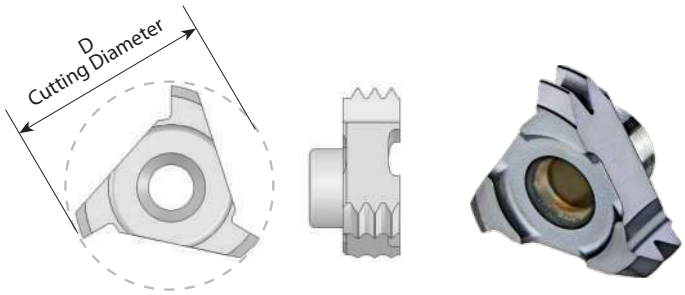

Insert Type	Ordering Code	Pitch TPI	Nominal Size	UNC	UNF	UNEF	Number of Teeth	D	Holder Code*
C10	**C10 I 20 UN**	20			1/2		2	10.0	H1, 1.1, 2, 15, 16, 17
	C10 I 18 UN	18			9/16		2	10.0	
	C10 I 13 UN	13		1/2			1	10.0	H1, 2, 15, 17
	C10 I 12 UN	12	5/8, 11/16, 3/4	9/16			1	10.0	
C12	**C12 I 32 UN**	32	9/16, 5/8				3	12.0	H3, 3.1, 4, 5, 18, 19, 20
	C12 I 28 UN	28	9/16, 5/8, 11/16				3	12.0	
	C12 I 24 UN	24				9/16, 5/8, 11/16	2	12.0	
	C12 I 20 UN	20	9/16, 5/8, 11/16			3/4	2	12.0	
	C12 I 18 UN	18			5/8		2	12.0	
	C12 I 16 UN	16	5/8, 11/16		3/4		1	12.0	
	C12 I 12 UN	12	5/8				1	12.4	
	C12 I 11 UN	11		5/8			1	12.0	H3, 4, 5,18,20
	C12 I 10 UN	10		3/4			1	12.0	
C18	**C18 I 32 UN**	32	3/4, 13/16, 7/8				6	17.8	H5.1, 5.2, 6, 7, 8, 9, 21, 22, 23
	C18 I 28 UN	28	3/4, 13/16, 7/8				5	17.8	
	C18 I 24 UN	24					4	17.8	
	C18 I 20 UN	20	1 1/16, 1 1/8			13/16, 7/8, 15/16	3	17.8	
	C18 I 18 UN	18					3	17.8	
	C18 I 16 UN	16	7/8, 1				3	17.8	
	C18 I 14 UN	14			7/8		2	17.8	
	C18 I 12 UN	12	7/8		1, 1 1/8		2	17.8	
	C18 I 11 UN	11					2	17.8	
	C18 I 9 UN	9		7/8			1	17.8	
	C18 I 8 UN	8		1			1	17.8	
C25	**C25 I 8 UN**	8	13/16, 1 1/4, 15/16				2	25.0	H10, 11, 24, 25
	C25 I 7 UN	7		1 1/4			1	25.0	
	C25 I 6 UN	6	17/16, 19/16	1 3/8, 1 1/2			1	25.0	
	C25 I 5 UN	5		1 3/4			1	25.0	
	C25 I 4 UN	4		2 1/2, 2 3/4			1	25.0	

* For complete toolholder description see pages B07-22 and 23

Full Profile - UN

Inserts for internal thread

Multi Flute

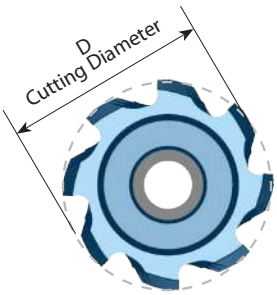





Insert Type	Ordering Code	Pitch TPI	Nominal size	UNC	UNF	UNEF	Number of Teeth	D	No. of Flutes	Holder Code*
S17	**S150 F 10 UN**	10		3/4			1	15.0	6	H3, 3.1, 4, 5, 18, 19, 20
S20	**S160 H 24 UN**	24				11/16	4	16.0	8	H5.1, 5.2, 6, 7, 8, 9, 21, 22, 23
	S169 H 20 UN	20				3/4, 13/16, 7/8, 15/16, 1	4	16.9	8	
	S164 F 16 UN	16	7/8, 15/16, 1		3/4		3	16.4	6	
	S191 F 14 UN	14			7/8		2	19.1	6	
	S186 F 12 UN	12	7/8, 15/16		1		2	18.6	6	
	S178 F 9 UN	9		7/8			1	17.8	6	
	S200 F 8 UN	8	1 1/8	1			1	20.0	6	
	S200 F 7 UN	7		1 1/8, 1 1/4			1	20.0	6	
	S200 E 6 UN	6	1 7/16	1 3/8, 1 1/2			1	20.0	5	
	S200 D 5 UN	5		1 3/4			1	20.0	4	
S35	**S350 F 8 UN**	8	1 5/8, 1 3/4				2	35.0	6	H12, 13, 14, 26
	S350 F 4 UN	4		2 1/2, 2 3/4, 3			1	35.0	6	

* For complete toolholder description see pages B07-22 and 23

G 55° BSW, BSF, BSP

Same insert for internal and external thread

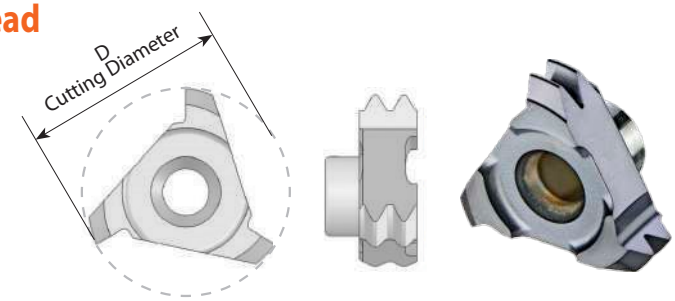

Insert Type	Ordering Code	Pitch TPI	Standard	Number of Teeth	D	Holder Code*
C10	**C10 19 W**	19	G 1/4	2	10.0	H1, 1.1, 2, 15, 16, 17
C12	**C12 19 W**	19	G 3/8	2	12.0	H3, 3.1, 4, 5, 18, 19, 20
C18	**C18 14 W**	14	G 1/2 - 7/8	2	17.8	H5.1, 5.2, 6, 7, 8, 9, 21, 22, 23
	C18 11 W	11	G ≥ 1	2	17.8	

Trapez - DIN 103

Inserts for internal thread

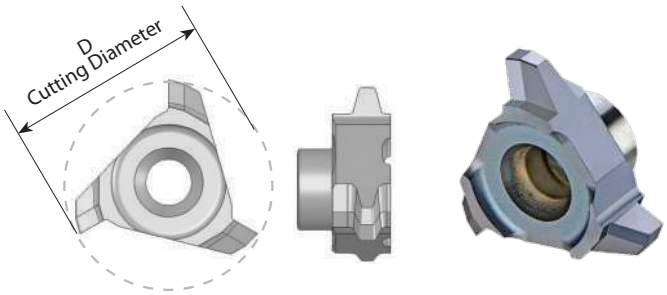

Insert Type	Ordering Code	Pitch mm	Standard	D	Holder Code*
C10	**C10 I 2 TR**	2.0	Tr16x2, Tr18x2	10.0	H1, 2, 15, 17
C12	**C12 I 2 TR**	2.0	Tr20x2	12.0	H3, 4, 5, 18, 20
C18	**C18 I 3 TR**	3.0	Tr24x3	17.8	H5.1, 5.2, 6, 7, 8, 9, 21, 22, 23
	C18 I 4 TR	4.0	Tr26x4	17.8	H5.1, 5.2, 21
	C18 I 5 TR	5.0	Tr28x5	17.8	
C25	**C25 I 6 TR**	6.0	Tr36x6	25.0	H10, 11, 24, 25

* For complete toolholder description see pages B07-22 and 23

Acme

Inserts for internal thread

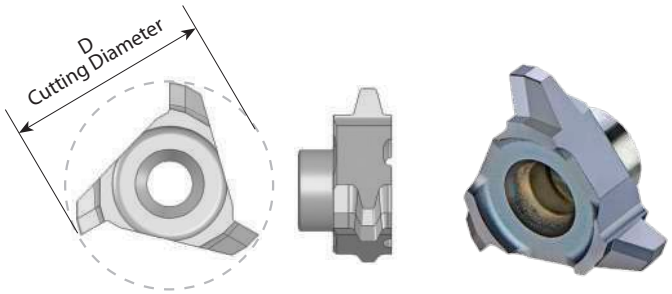

Insert Type	Ordering Code	Pitch TPI	Standard	D	Holder Code*
C18	**C18 I 5 ACME**	5	1 1/8, 1 1/4	18.0	H5.1, 5.2, 21
C25	**C25 I 4 ACME**	4	1 1/2, 1 3/4, 2	25.0	H10, 11, 24, 25

Round-DIN 405

Inserts for internal thread

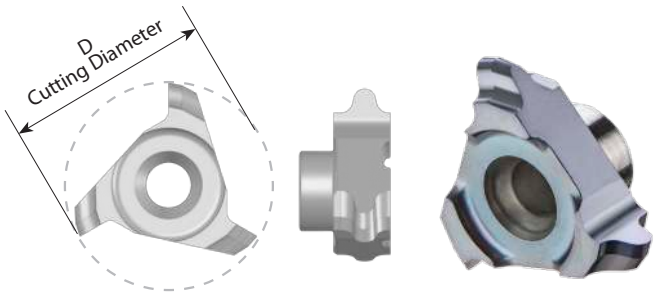

Insert Type	Ordering Code	Pitch TPI	Standard	D	Holder Code*
C18	**C18 1/8RD**	8	1/8RD	17.8	H5.1, 5.2, 6, 7, 8, 9, 21, 22, 23
	C18 1/6RD	6	1/6RD	17.8	H5.1, 5.2, 21
C25	**C25 1/4RD**	4	1/4RD	25.0	H10, 11, 24, 25

* For complete toolholder description see pages B07-22 and 23

Chamfering and Grooving

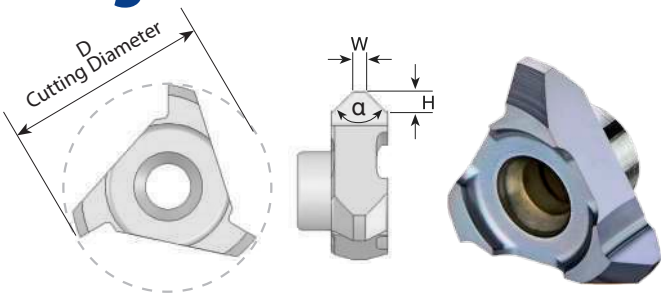

Insert Type	Ordering Code	D	H	W	α	Holder Code*
C10	**C10 C90**	10.0	1.30	0.4	90˚	H1, 2, 15, 17
C12	**C12 C90**	12.0	1.35	0.3	90˚	H3, 4, 5, 18, 20
C18	**C18 C90**	17.8	1.95	1.1	90˚	H5.1, 5.2, 6, 7, 8, 9, 21, 22, 23
C25	**C25 C90**	25.0	2.50	1.0	90˚	H10, 11, 24, 25

Chamfering, Grooving and Boring

Multi Flute

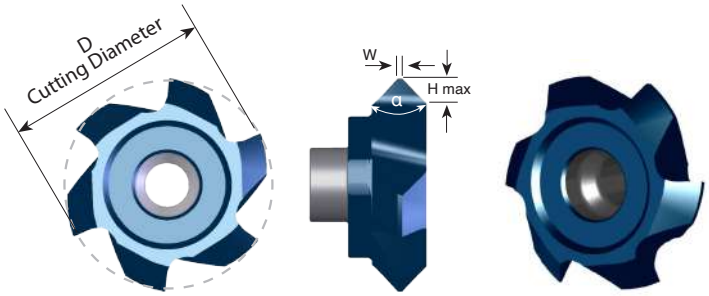

Insert Type	Ordering Code	D	H max	W	α	No. of Flutes	Holder Code*
S17	**SC160 E H14**	16.0	1.35	0.2	90°	5	H3, 3.1, 4, 5, 18, 19, 20
S20	**SC170 E H14**	17.0	1.35	0.2	90°	5	H6, 7, 8, 9, 21, 22, 23
	SC200 F H14	20.0	1.35	0.2	90°	6	H5.1, 5.2, 6, 7, 8, 9, 21, 22, 23
	SC200 F H24	20.0	2.35	0.2	90°	6	
S35	**SC350 F H42**	35.0	4.20	0.2	90°	6	H12, 13, 14, 26
S20	**SC200 F H20**	20.0	1.95	1.0	90°	6	H5.1, 5.2, 6, 7, 8, 9, 21, 22, 23
	SC200 F H17	20.0	1.70	1.5	90°	6	
	SC200 F H15	20.0	1.50	2.0	90°	6	
	SC200 F H12	20.0	1.20	2.5	90°	6	

* For complete toolholder description see pages B07-22 and 23

Dovetail 45°

Multi Flute

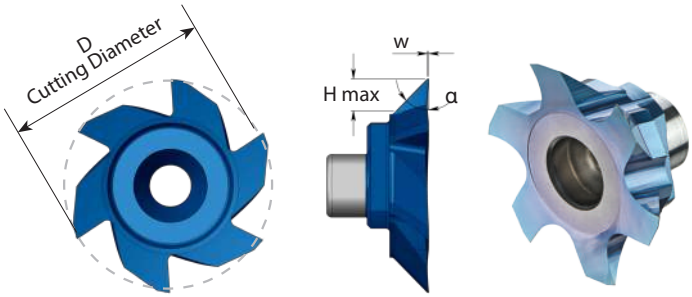

Insert Type	Ordering Code	D	H	W	α	No. of Flutes	Holder Code*
S17	**SC170 F A45**	17.0	2.5	0.1	45°	6	H3, 3.1, 4, 5, 18, 19, 20
S20	**SC200 F A45**	20.0	3.0	0.1	45°	6	H5.1, 5.2, 6, 7, 8, 9, 21, 22, 23

Groove Milling

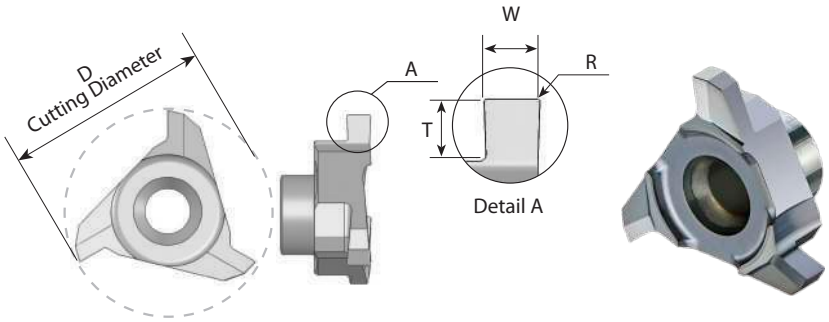

Insert Type	Ordering Code	D	W ±0.02	T max.	R	Groove Dia. (min.)	Holder Code*
C10	**C10 W08**	10.0	0.80	0.80	0.1	Ø > 10.0	H1, 1.1, 2, 15, 16, 17
	C10 W09	10.0	0.90	0.90	0.1	Ø > 10.0	
	C10 W10	10.0	1.00	0.90	0.1	Ø > 10.0	
	C10 W15	10.0	1.50	1.20	0.1	Ø > 10.0	H1, 2, 15, 17
	C10 W20	10.0	2.00	1.20	0.1	Ø > 10.0	
C12	**C12 W08**	12.0	0.80	0.80	0.1	Ø > 12.0	H3, 3.1, 4, 5, 18, 19, 20
	C12 W10	12.0	1.00	0.90	0.1	Ø > 12.0	
	C12 W10T	12.3	1.00	1.60	0.2	Ø > 12.3	H3, 4, 5, 18, 20
	C12 W15	12.4	1.50	1.60	0.1	Ø > 12.4	
	C12 W20	12.4	2.00	1.60	0.1	Ø > 12.4	
	C12 W25	12.4	2.50	1.60	0.1	Ø > 12.4	
C18	**C18 W10**	17.8	1.00	1.50	0.1	Ø > 17.8	H5.1, 5.2, 6, 7, 8, 9, 21, 22, 23
	C18 W12	17.8	1.20	1.50	0.1	Ø > 17.8	
	C18 W15	17.8	1.50	1.95	0.1	Ø > 17.8	
	C18 W20	17.8	2.00	2.80	0.1	Ø > 17.8	H5.1, 5.2, 21
C25	**C25 W20**	25.0	2.00	3.00	0.2	Ø > 25.0	H10, 11, 24, 25
	C25 W25	25.0	2.50	3.00	0.2	Ø > 25.0	
	C25 W30	25.0	3.00	3.00	0.2	Ø > 25.0	
	C25 W35	25.0	3.50	3.50	0.2	Ø > 25.0	
	C25 W40	25.0	4.00	3.50	0.2	Ø > 25.0	
	C25 W50	25.0	5.00	3.50	0.2	Ø > 25.0	

* For complete toolholder description see pages B07-22 and 23

Groove Milling

DIN 471/472

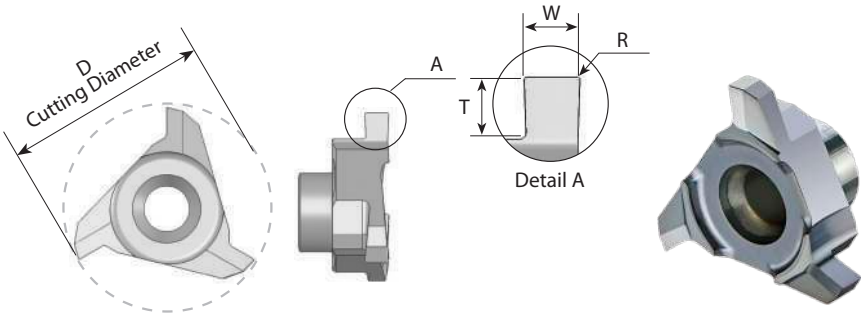

Insert Type	Ordering Code	D	Nom` groove width	W -0.04	T max.	R	Groove Dia. (min.)	Holder Code*
C10	**C10 W087**	10.0	0.8	0.87	1.3	0	Ø > 10.0	H1, 2, 15, 17
	C10 W097	10.0	0.9	0.97	1.3	0	Ø > 10.0	
	C10 W121	10.0	1.10	1.21	1.3	0	Ø > 10.0	
	C10 W141	10.0	1.30	1.41	1.3	0.1	Ø > 10.0	
	C10 W171	10.0	1.60	1.71	1.3	0.1	Ø > 10.0	
C12	**C12 W121**	12.4	1.10	1.21	1.7	0	Ø > 12.4	H3, 4, 5, 18, 20
	C12 W141	12.4	1.30	1.41	1.7	0.1	Ø > 12.4	
	C12 W171	12.4	1.60	1.71	1.7	0.1	Ø > 12.4	
C18	**C18 W121**	17.8	1.10	1.21	2.9	0.1	Ø > 17.8	H5.1, 5.2, 21
	C18 W141	17.8	1.30	1.41	2.9	0.1	Ø > 17.8	
	C18 W171	17.8	1.60	1.71	2.9	0.1	Ø > 17.8	
	C18 W196	17.8	1.85	1.96	2.9	0.15	Ø > 17.8	

* For complete toolholder description see pages B07-22 and 23

Groove Milling

Multi Flute

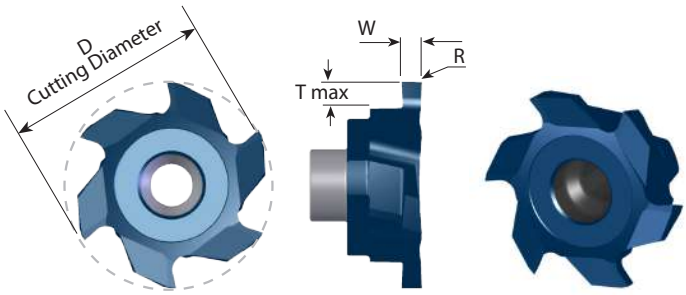

Insert Type	Ordering Code	D	W ±0.02	T Max.	R	Groove Dia. (min)	No. of Flutes	Holder Code*
S17	**SG170 F W15**	17.0	1.5	2.8	0.2	Ø > 17	6	H3, 3.1, 4, 5, 18, 19, 20
	SG170 F W20	17.0	2.0	2.8	0.2	Ø > 17	6	
	SG170 F W25	17.0	2.5	2.8	0.2	Ø > 17	6	
S20	**SG200 F W15**	20.0	1.5	2.9	0.2	Ø > 20	6	H5.1, 5.2, 6, 7, 8, 9, 21, 22, 23
	SG200 F W20	20.0	2.0	2.9	0.2	Ø > 20	6	
	SG200 F W25	20.0	2.5	2.9	0.2	Ø > 20	6	
	SG200 F W30	20.0	3.0	2.9	0.2	Ø > 20	6	
	SG200 F W40	20.0	4.0	2.9	0.2	Ø > 20	6	
	SG200 F W49	20.0	4.9	2.9	0.2	Ø > 20	6	
S20	**SG200 E W20T**	20.0	2.0	3.7	0.2	Ø > 20	5	H5.1, 5.2, 21
	SG200 E W25T	20.0	2.5	3.7	0.2	Ø > 20	5	
	SG200 E W30T	20.0	3.0	3.7	0.2	Ø > 20	5	
S35	**SG350 F W30T**	35.0	3.0	6.3	0.2	Ø > 35	6	H12, 13, 14, 26
	SG350 F W40T	35.0	4.0	6.3	0.2	Ø > 35	6	
	SG350 F W50T	35.0	5.0	6.3	0.2	Ø > 35	6	
	SG350 F W60T	35.0	6.0	6.3	0.2	Ø > 35	6	
	SG350 F W80T	35.0	8.0	6.3	0.2	Ø > 35	6	

* For complete toolholder description see pages B07-22 and 23

Groove Milling

Multi Flute

DIN 471/472

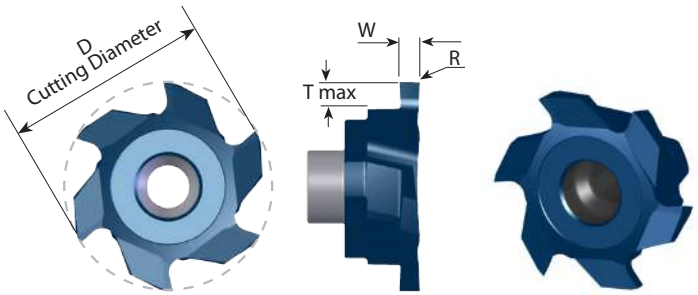

Insert Type	Ordering Code	D	Nom` groove width	W -0.04	T Max.	R	Groove Dia. (min)	No. of Flutes	Holder Code*
S20	**SG200 F W121**	20.0	1.10	1.21	4.0	0	Ø > 20	6	H5.1, 5.2, 21
	SG200 F W141	20.0	1.30	1.41	4.0	0.1	Ø > 20	6	
	SG200 F W171	20.0	1.60	1.71	4.0	0.1	Ø > 20	6	
	SG200 F W196	20.0	1.85	1.96	4.0	0.1	Ø > 20	6	

Full Radius Groove Milling

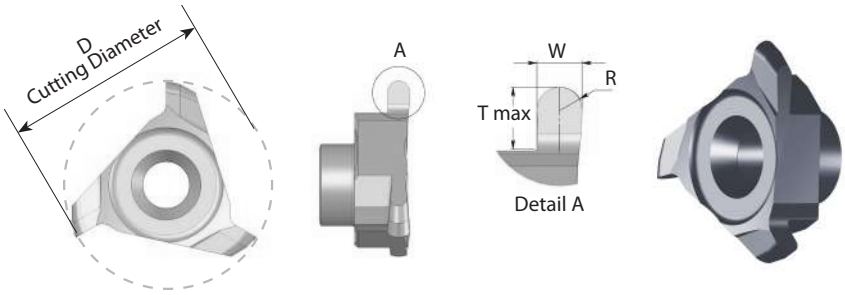

Insert Type	Ordering Code	D	R	W ±0.02	T Max.	Groove Dia. (min)	Holder Code*
C12	**C12 R11**	12.4	1.1	2.2	1.7	Ø >12.4	H3, 4, 5, 18, 20
C18	**C18 R08**	17.8	0.8	1.6	2.9	Ø >17.8	H5.1, 5.2, 21
	C18 R11	17.8	1.1	2.2	2.9	Ø >17.8	

* For complete toolholder description see pages B07-22 and 23

Full Radius Groove Milling

Multi Flute

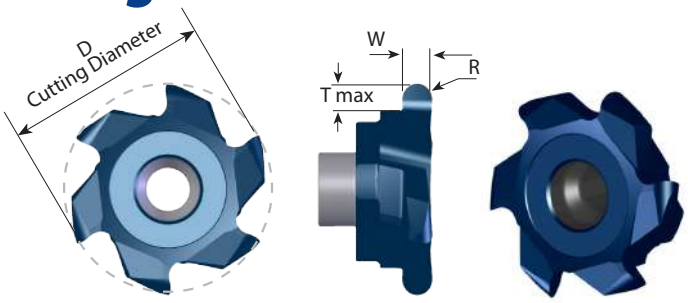

Insert Type	Ordering Code	D	R	W ±0.02	T Max.	Groove Dia. (min)	No. of Flutes	Holder Code*
S20	**SG200 F R10**	20.0	1.0	2.0	2.9	Ø > 20	6	H5.1, 5.2, 6, 7, 8, 9, 21, 22, 23
	SG200 F R12	20.0	1.2	2.4	2.9	Ø > 20	6	
	SG200 F R15	20.0	1.5	3.0	2.9	Ø > 20	6	
	SG200 F R20	20.0	2.0	4.0	2.9	Ø > 20	6	

Face Milling and Finishing

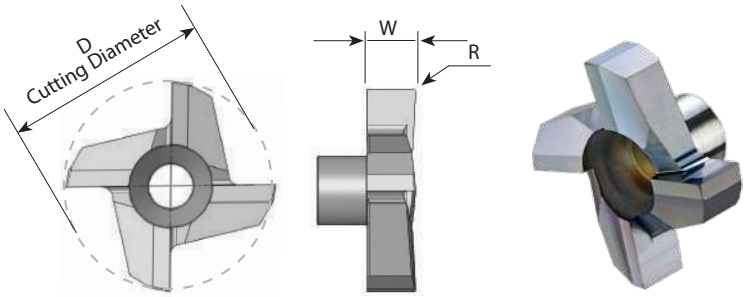

Insert Type	Ordering Code	D	W ± 0.1	R	Holder Code*
C10	**C10 F R0.1**	10	3.0	0.1	H1, 1.1, 2, 15, 16, 17
C12	**C12 F R0.1**	12	3.0	0.1	H3, 3.1, 4, 5,18, 19, 20
C18	**C18 F R0.1**	17.8	5.0	0.1	H5.1, 5.2, 6, 7, 8, 9, 21, 22, 23
C25	**C25 F R0.2**	25.0	6.0	0.2	H10, 11, 24, 25

* For complete toolholder description see pages B07-22 and 23

Corner Rounding

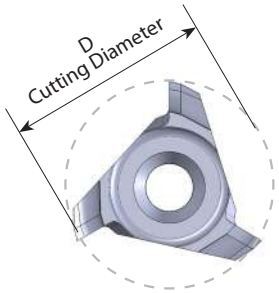

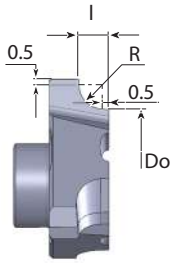



Insert Type	Ordering Code	D	Do	R	I	Holder Code*
C10	**C10 CR05**	10.0	7.9	0.5	1.05	H1, 1.1, 2, 15, 16, 17
	C10 CR10	10.0	6.9	1.0	1.55	
C18	**C18 CR13**	17.8	14.2	1.25	1.80	H5.1, 5.2, 6, 7, 8, 9, 21, 22, 23
	C18 CR15	17.8	13.7	1.5	2.05	
	C18 CR20	17.8	12.7	2.0	2.55	
C25	**C25 CR30**	25.0	17.7	3.0	3.60	H10, 11, 24, 25

Corner Rounding

Multi Flute

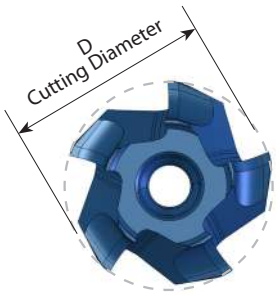

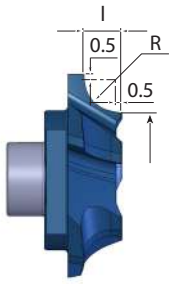

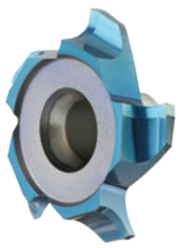

Insert Type	Ordering Code	D	Do	R	I	No. of Flutes	Holder Code*
S17	**S170 E CR10**	17.0	13.9	1.0	1.55	5	H3, 3.1, 4, 5, 18, 19, 20
	S170 E CR13	17.0	13.4	1.25	1.80	5	
	S170 E CR15	17.0	12.9	1.5	2.05	5	

* For complete toolholder description see pages B07-22 and 23

Front and Back Corner Rounding

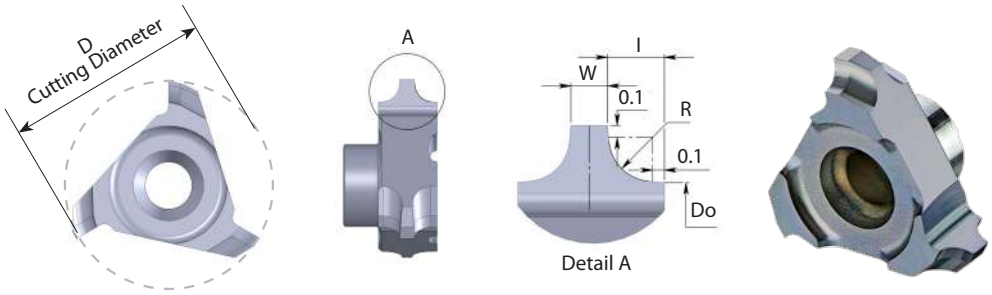

Insert Type	Ordering Code	D	Do	R	W	I	Holder Code*
C10	**C10 CRD08**	10.0	8.2	0.8	1.2	0.90	H1, 1.1, 2, 15, 16, 17
C18	**C18 CRD15**	17.8	14.6	1.5	1.8	1.60	H5.1, 5.2, 6, 7, 8, 9, 21, 22, 23
C25	**C25 CRD20**	25.0	20.7	2.0	2.0	2.10	H10, 11, 24, 25

Front and Back Corner Rounding

Multi Flute

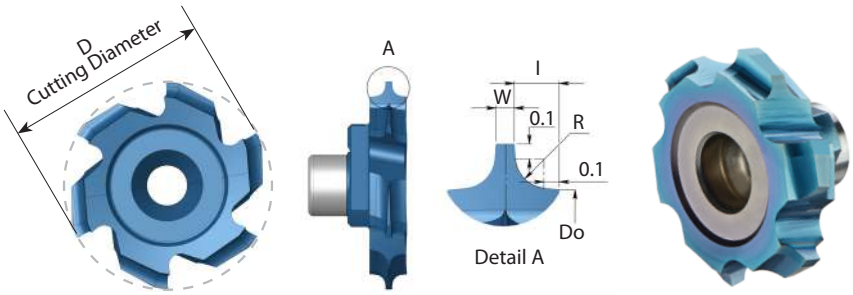

Insert Type	Ordering Code	D	Do	R	W	I	No. of Flutes	Holder Code*
S17	**S170 F CRD08**	17.0	15.2	0.8	1.2	0.90	6	H3, 3.3, 4, 5, 18, 19, 20
S20	**S200 F CRD15**	20.0	16.8	1.5	1.8	1.60	6	H5.1, 5.2, 6, 7, 8, 9, 21, 22, 23

* For complete toolholder description see pages B07-22 and 23

Steel Toolholders

With internal coolant

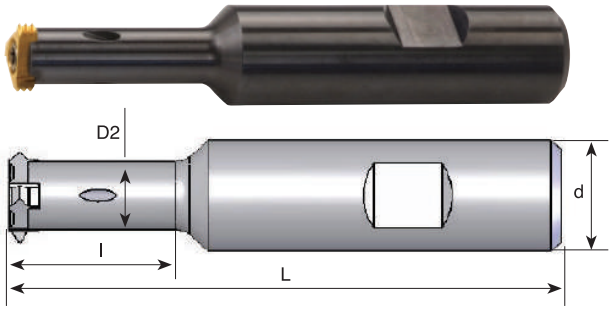

Tool No.	Ordering Code	Insert Type	d	D2	l	L	Insert Screw	Torx Key
H1	**SRC 1210 E**	C10	12	7.3	19	70	S5	K5
H1.1	**SRC 1210 F**		12	8.0	25	80	S5	K5
H2	**SRC 1610 G**		16	7.3	19	90	S5	K5
H3	**SRC 1212 E**	C12, S17	12	9.0	25	70	S10	K10
H3.1	**SRC 1212 G**		12	10.0	40	90	S10	K10
H4	**SRC 1612 G**		16	9.0	25	90	S10	K10
H5	**SRC 1612 H**		16	9.0	35	100	S10	K10
H5.1	**SRC 1618 F**	C18, S20	16	12.0	25	80	S16	K16
H5.2	**SRC 1618 G**		16	12.0	40	90	S16	K16
H6	**SRC 1618 H**		16	13.8	48	100	S16	K16
H7	**SRC 2018 H**		20	13.8	32	100	S16	K16
H8	**SRC 2018 J**		20	13.8	48	110	S16	K16
H9	**SRC 2018 L**		20	13.8	74	140	S16	K16
H10	**SRC 2525 J**	C25	25	17.5	45	115	S27	K27
H11	**SRC 2525 M**		25	17.5	80	150	S27	K27
H12	**SRC 2035 K**	S35	20	22.0	44	130	S33	K33
H13	**SRC 2535 H**		25	22.0	40	100	S33	K33
H14	**SRC 2535 K**		25	22.0	60	130	S33	K33

Carbide Shank Toolholders

With internal coolant

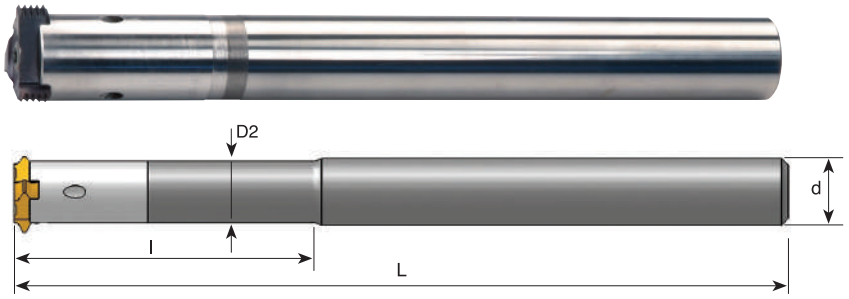

Tool No.	Ordering Code	Insert Type	d	D2	l	L	Insert Screw	Torx Key
H15	**CRC 0810 L35 K**	C10	8	7.3	35	125	S5	K5
H16	**CRC 0810 K**		8	8.0	---	125	S5	K5
H17	**CRC 1010 L45 M**		10	7.3	45	150	S5	K5
H18	**CRC 1012 L40 M**	C12, S17	10	9.0	40	150	S10	K10
H19	**CRC 1012 M**		10	10.0	---	150	S10	K10
H20	**CRC 1212 L57 P**		12	9.0	57	165	S10	K10
H21	**CRC 1218 P**	C18, S20	12	12.0	---	170	S16	K16
H22	**CRC 1618 L48 R**		16	13.8	48	195	S16	K16
H23	**CRC 1618 L74 R**		16	13.8	74	195	S16	K16
H24	**CRC 1625 R**	C25	16	17.5	28	205	S27	K27
H25	**CRC 2025 L85 S**		20	17.5	85	250	S27	K27
H26	**CRC 2035 S**	S35	20	22.0	37	260	S33	K33

Toolholders without Weldon

CMT Multi Insert Milling Cutters

CMT indexable milling inserts and cutters for Grooving, Chamfering and Threading



Inserts

- Insert profiles are fully ground
- Spiral inserts for smooth cutting operation
- Three cutting edges on each insert
- For a wide range of materials and applications

Carbide grade: MT7



Milling cutters / Disc milling cutter

- 4 - 8 inserts per holder, for high productivity
- For use with CPT standard CMT S35 toolholders
- The milling cutters are coated with a special layer (silver color) for high anti-corrosive resistance and extra protection against cutting burrs

Demonstration

Product Identification - Ordering Codes

Inserts

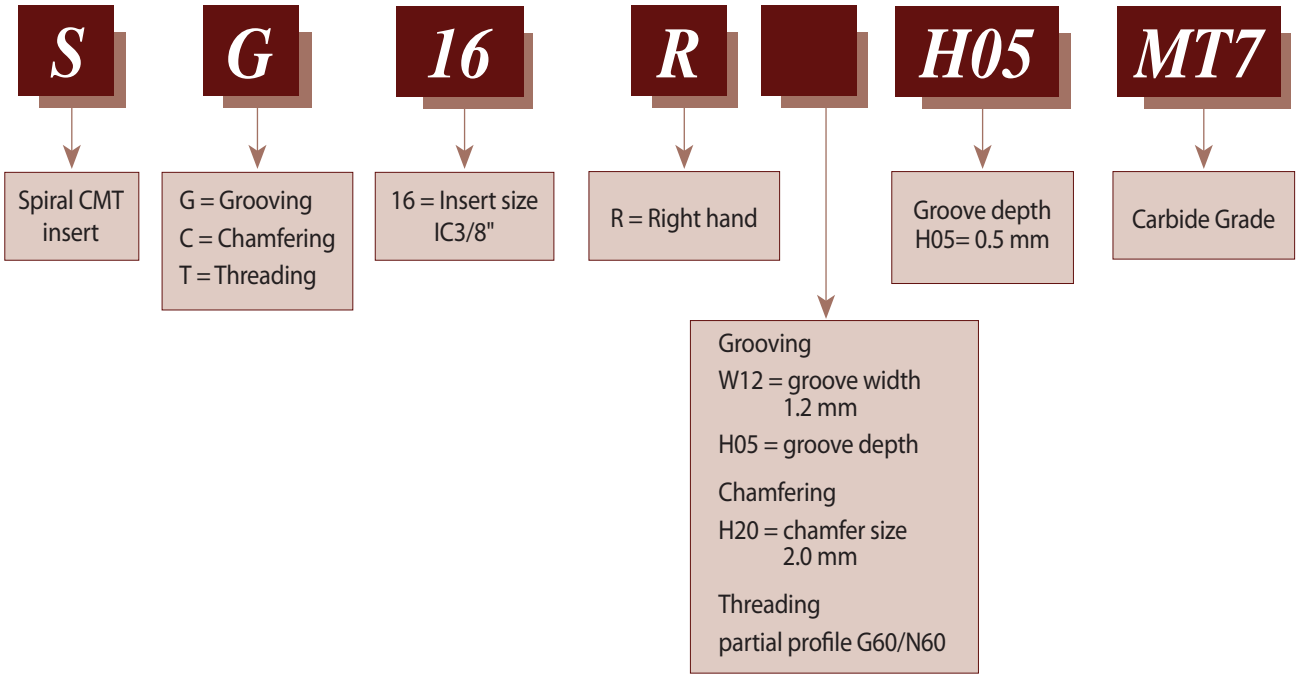

Toolholders

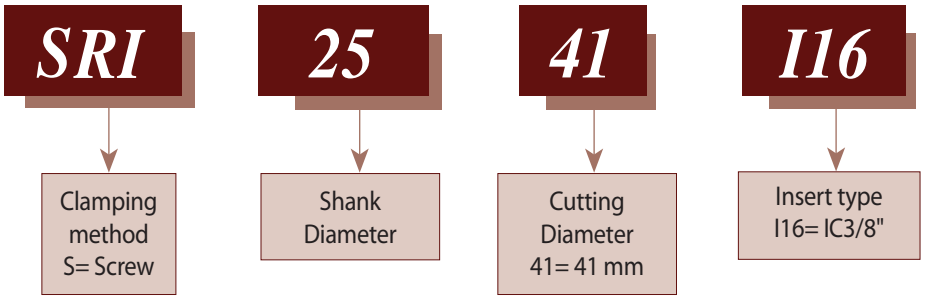

Groove Milling

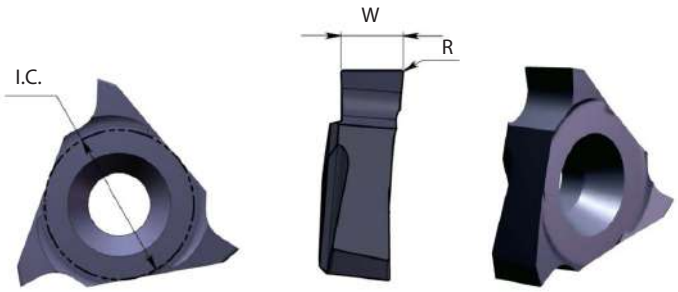

DIN 471 / 472

Insert Type	I.C.	Ordering Code	W	R	Holder Code*
SI16	3/8"	**SG 16 R W14**	1.40	0.10	H27, 28, 29
		SG 16 R W17	1.70	0.10	
		SG 16 R W19	1.95	0.15	
		SG 16 R W22	2.25	0.15	
		SG 16 R W27	2.75	0.20	
		SG 16 R W32	3.25	0.20	
		SG 16 R W42	4.25	0.20	
		SG 16 R W43	4.35	0.20	H27, 29, 30

Right hand cutting

Insert Type	I.C.	Ordering Code	W	R	Holder Code*
SI16	3/8"	**SG 16 L W43**	4.35	0.20	H30

Left hand cutting

*Maximum groove depth (T max) according to the toolholder.

* For complete toolholder description see pages B07-29 and 30

Groove Milling with Chamfer

DIN 471 / 472

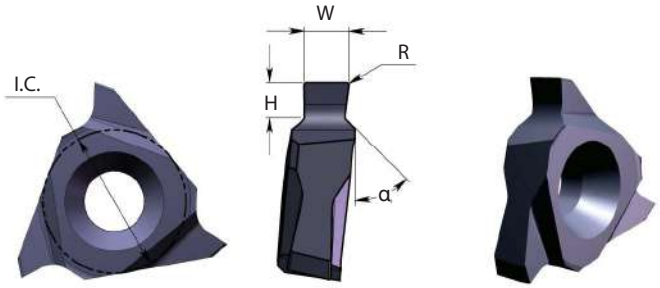

Insert Type	I.C.	Ordering Code	W	H max	R	α	Holder Code*
SI16	3/8"	**SG 16 R W12 H05**	1.20	0.50	0.10	45°	H27, 28, 29
		SG 16 R W14 H07	1.40	0.70			
		SG 16 R W14 H08	1.40	0.85			
		SG 16 R W17 H08	1.70	0.85			
		SG 16 R W17 H10	1.70	1.00			
		SG 16 R W19 H12	1.95	1.25	0.15		
		SG 16 R W22 H15	2.25	1.50			
		SG 16 R W27 H15	2.75	1.50			
		SG 16 R W27 H17	2.75	1.75			
		SG 16 R W32 H17	3.25	1.75			
		SG 16 R W42 H20	4.25	2.00			
		SG 16 R W42 H25	4.25	2.50			

Right hand cutting

Chamfering

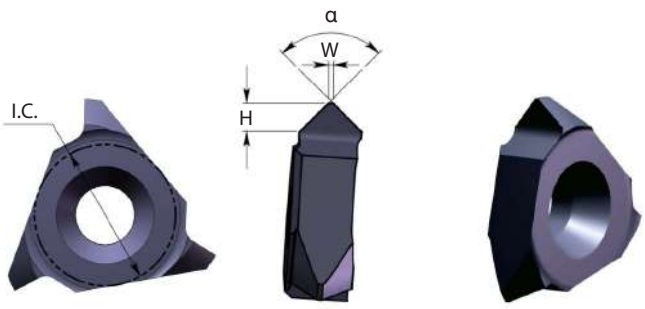

Insert Type	I.C.	Ordering Code	H max	W	α	Holder Code*
SI16	3/8"	**SC 16 R H20**	2.00	0.2	90°	H27, 28, 29
		SC 16 R H19	1.90	0.5		

Right hand cutting

* For complete toolholder description see pages B07-29 and 30

Partial Profile 60° - ISO, UN

Same insert for internal and external thread

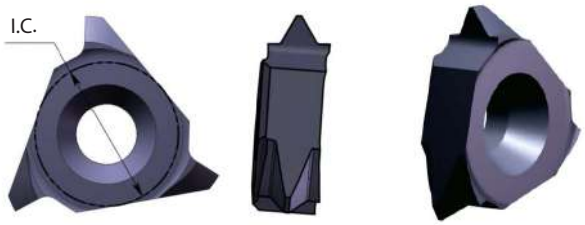

Insert Type	I.C.	Ordering Code	Pitch Range mm	Pitch Range TPI	Holder Code*
SI16	3/8"	**ST 16 R G60**	Int. 1.5-3.0	Int. 16-8	H27, 28, 29
			Ex. 1.25-3.0	Ex. 20-8	
		ST 16 R N60	Int. 3.5-5.0	Int. 7-5	
			Ex. 3.0-4.5	Ex. 8-6	

Right hand cutting

* For complete toolholder description see pages B07-29 and 30

Toolholders

Milling Cutter - Arbor

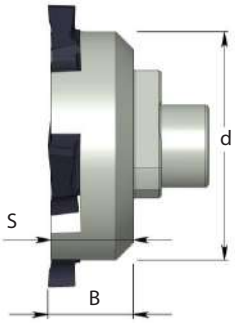

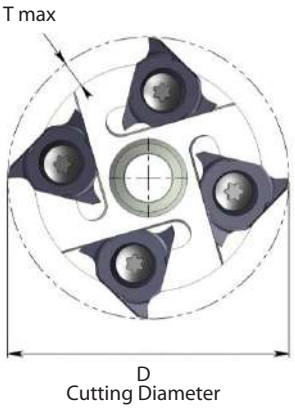



Tool No.	Ordering Code	Insert Type	D	d	T max	B	S	Insert Screw	Torx Key
H27	**SRI 41- I16**	SI16	41	33.2	3.6	12.5	12.0	S16S	K16

Right hand cutting

To connect to the standard CMT toolholders S35: SRC 2035 K, SRC 2535 H, SRC 2535 K, CRC 2035 S

Milling Cutter - Shell Mill

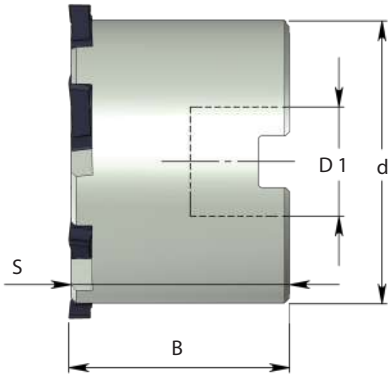

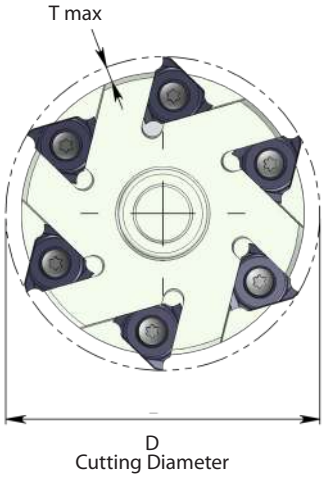



Tool No.	Ordering Code	Insert Type	D	d	T max	B	S	D1	Insert Screw	Torx Key
H28	**SRI 0063-I16**	SI16	63	57	3.0	44.5	44.0	22	S16S	K16

Right hand cutting

Milling Cutter - Weldon Shank

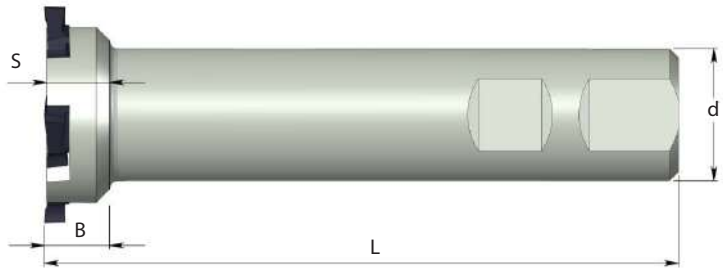



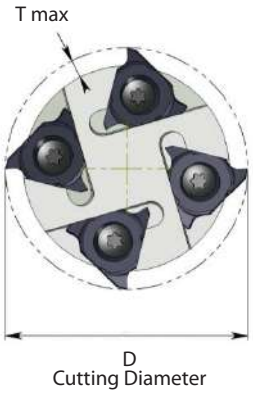

Tool No.	Ordering Code	Insert Type	D	d	T max	B	S	L	Insert Screw	Torx Key
H29	**SRI 2541-I16**	SI16	41	25	3.6	12.5	12.0	125	S16S	K16

Right hand cutting

Milling Cutter - Disc Milling

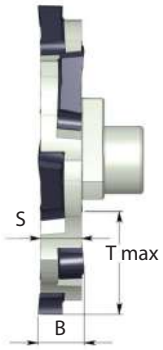

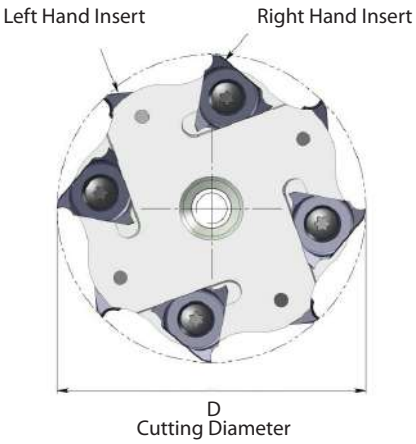



Tool No.	Ordering Code	Insert Type	D	T max	B	S	Insert Screw	Torx Key
H30	**SRI 55-I16**	SI16	55	15.5	8.2	7.2	S16M	K16

Right hand cutting
To use only with inserts SG 16 R W43, and SG 16 L W43
To connect to the standard CMT toolholders S35: SRC 2035 K, SRC 2535 H, SRC 2535 K, CRC 2035 S

Mill-Thread Solid Carbide | B08

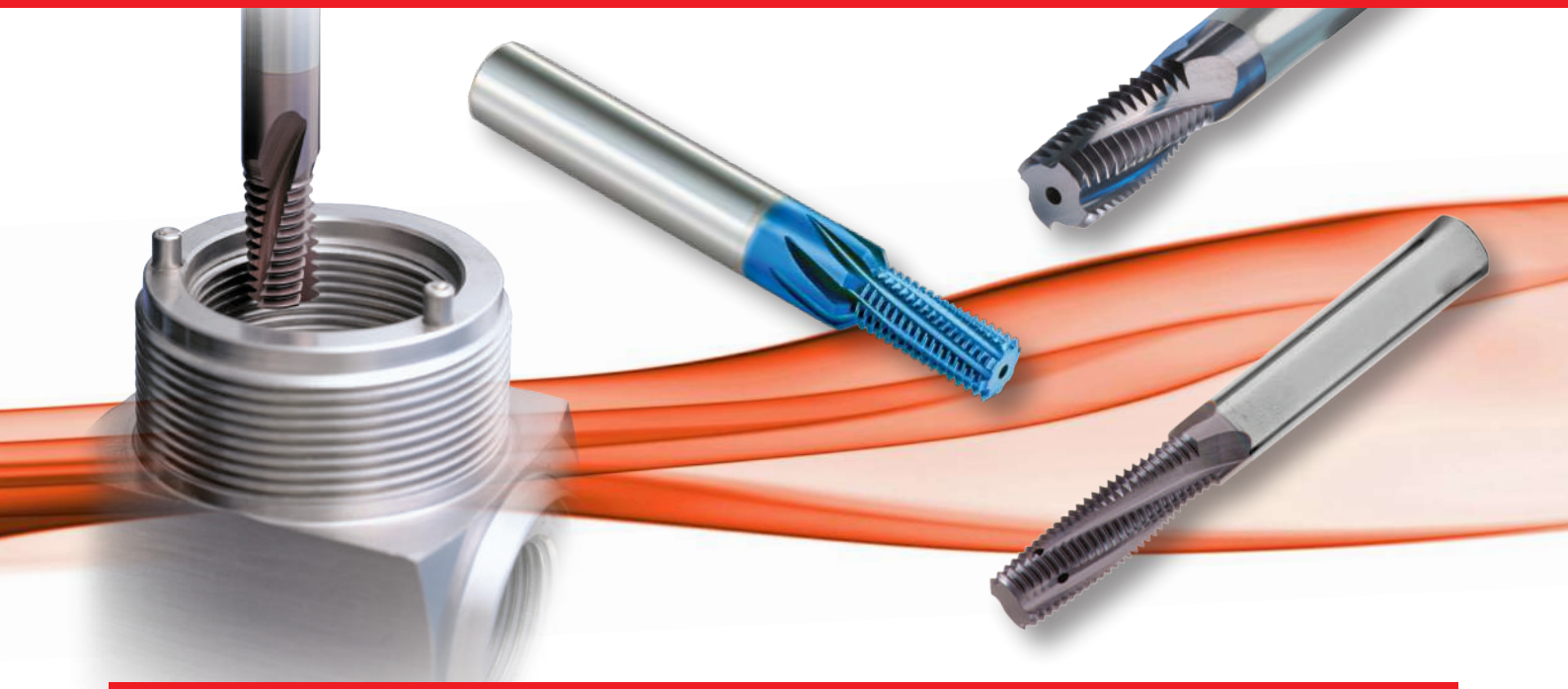

Advantages of Mill-Thread Solid Carbide

- Thread is generated in one pass.
- Spiral flutes allow smooth cutting action.
- Shorter machining time due to multi, 3 to 6 flutes.
- 2.2 mm and up cutting diameter.
- Threads up to shoulder in blind hole.
- Longer tool life due to special multi-layer coating.
- Same tool can be used for a variety of materials.
- Excellent surface finish.
- Low cutting pressure allows thin wall machining.
- Same tool used for R.H and L.H. threads.

Demonstration

MT - Thread Mills without internal coolant
MTB - Thread Mills with internal coolant bore for blind holes
MTZ - Thread Mills with internal coolant through the flutes
MTQ - Thread Mills that include relieved neck for deep work pieces
FMT - Fast Thread Mills with internal coolant bore
AMT - Solid Carbide Thread Mills for Aluminum machining
EMT - Thread Mills For External Threads

Demonstration

Contents: Page:

Product Identification 2
ISO - without coolant bore - MT 3
with internal coolant bore - MTB 4
with internal coolant through the flutes - MTZ 5
with relieved neck and internal coolant bore - MTQ 6
with internal coolant bore - FMT 7
with internal coolant bore - AMT 8
with internal coolant bore and cutting chamfer - AMT 8
UN - without coolant bore - MT 9
with internal coolant bore - MTB 10
with internal coolant through the flutes - MTZ 11
with relieved neck and internal coolant bore - MTQ 12
with internal coolant bore - FMT 13
with internal coolant bore - AMT 13
with internal coolant bore and cutting chamfer - AMT 14
G (55°) - without coolant bore - MT 14
with internal coolant bore - MTB 15
with internal coolant through the flutes - MTZ 15
with internal coolant bore - FMT 16
Whitworth - with internal coolant bore - MTB 17
with internal coolant through the flutes - MTZ 17

Contents: Page:

BSPT - without coolant bore - MT 18
with internal coolant bore - MTB 18
with internal coolant through the flutes - MTZ 19
NPT - without coolant bore - MT 20
with internal coolant bore - MTB 20
with internal coolant through the flutes - MTZ 21
NPTF - without coolant bore - MT 21
with internal coolant bore - MTB 22
with internal coolant through the flutes - MTZ 22
Solid Carbide Tapered End Mills 23
NPS - with internal coolant bore - MTB 24
NPSF - with internal coolant bore - MTB 24
MJ - with internal coolant bore - MTB 25
UNJ - with internal coolant bore - MTB 25
PG DIN 40430 - with internal coolant bore MTB 26
Mill - Thread Solid Carbide for External Threads EMT 27-28
ISO 27
UN 27
MJ 28
UNJ 28

Product Identification

Mill-Thread Solid Carbide Ordering Codes

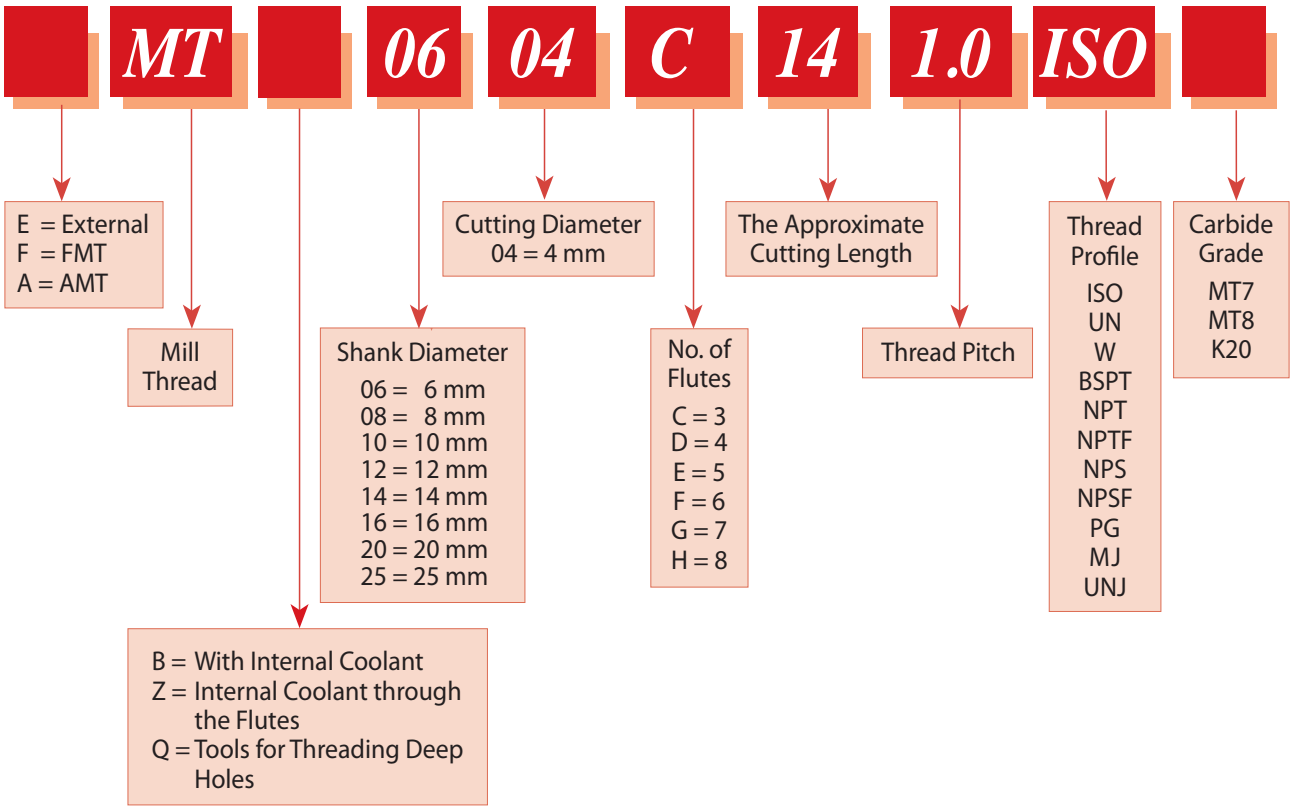

ISO

Tools for Internal Thread

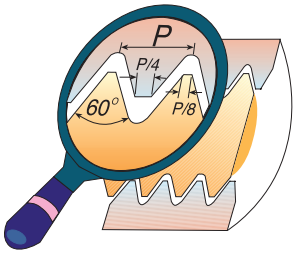

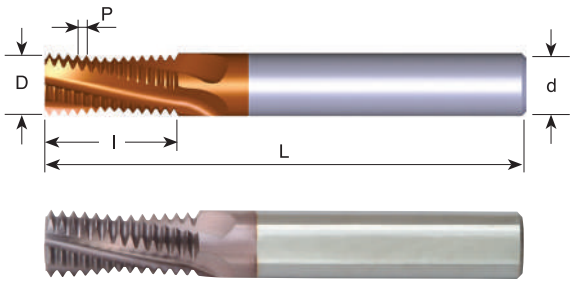

Grade	P	M	K	N	S	H
MT7	●	○	●	○	○	

Pitch mm	M coarse	M fine	Ordering Code	d	D	No. of Flutes	l	L
0.5	M3	M4	MT 06022 C5 0.5 ISO	6	2.2	3	5.3	58
0.5		M5	MT 06038 C10 0.5 ISO	6	3.8	3	10.3	58
0.5		M6, M8	MT 06053 D10 0.5 ISO	6	5.3	4	10.3	58
0.7	M4		MT 06031 C7 0.7 ISO	6	3.1	3	7.4	58
0.75		M6, M8	MT 06045 C10 0.75 ISO	6	4.5	3	10.1	58
0.75		M6, M8	MT 0605 C13 0.75 ISO	6	5.0	3	13.1	58
0.8	M5		MT 06036 C9 0.8 ISO	6	3.6	3	9.2	58
0.8	M5		MT 0604 C13 0.8 ISO	6	4.0	3	13.2	58
1.0	M6	M8	MT 0604 C10 1.0 ISO	6	4.0	3	10.5	58
1.0	M6	M8	MT 0604 C14 1.0 ISO	6	4.0	3	14.5	58
1.0		M9	MT 0606 C12 1.0 ISO	6	6.0	3	12.5	58
1.0		M10	MT 0808 D16 1.0 ISO	8	8.0	4	16.5	64
1.25	M8	M10	MT 0605 C14 1.25 ISO	6	5.0	3	14.4	58
1.25	M8	M10	MT 0605 C19 1.25 ISO	6	5.0	3	19.4	58
1.5	M10	M12	MT 0807 C17 1.5 ISO	8	7.0	3	17.3	64
1.5	M10	M12	MT 0807 C24 1.5 ISO	8	7.0	3	24.8	76
1.5		M14	MT 1010 D21 1.5 ISO	10	10.0	4	21.8	73
1.5		M14	MT 1212 D29 1.5 ISO	12	12.0	4	29.3	84
1.5		M16, M18	MT 1414 D32 1.5 ISO	14	14.0	4	32.3	84
1.5		M20	MT 1616 F33 1.5 ISO	16	16.0	6	33.8	105
1.75	M12		MT 0808 C20 1.75 ISO	8	8.0	3	20.1	64
1.75	M12		MT 0808 C28 1.75 ISO	8	8.0	3	28.9	76
2.0	M14	M17	MT 1010 C27 2.0 ISO	10	10.0	3	27.0	73
2.0	M14	M17	MT 1010 C39 2.0 ISO	10	10.0	3	39.0	105
2.0	M16	M18, M20	MT 1212 D27 2.0 ISO	12	12.0	4	27.0	84
2.0	M16	M18, M20	MT 14128 D39 2.0 ISO	14	12.8	4	39.0	105
2.0		M26	MT 2020 F41 2.0 ISO	20	20.0	6	41.0	105
2.5	M18, M20		MT 1414 D33 2.5 ISO	14	14.0	4	33.8	84
2.5	M18, M20		MT 1414 D48 2.5 ISO	14	14.0	4	48.8	105
3.0	M24	M28	MT 1616 C40 3.0 ISO	16	16.0	3	40.5	105
3.0	M24	M28	MT 1616 C58 3.0 ISO	16	16.0	3	58.5	120
3.0	M27	M28, M30	MT 2020 D43 3.0 ISO	20	20.0	4	43.5	105

Order example: MT 1212 D27 2.0 ISO MT7

● First choice ○ Alternative

For thread mills with coolant bore see following pages

For small thread mills see pages B09-3, 4, 11, 15, 17 and B11-3, 6



ISO With internal coolant bore

Tools for Internal Thread

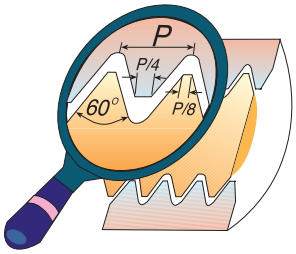

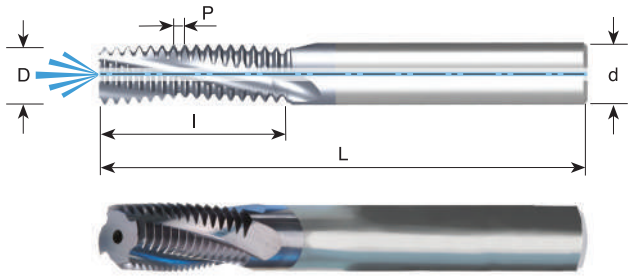

Grade	P	M	K	N	S	H
MT7	●	●	●	○	●	≤47 HRc

Pitch mm	M coarse	M fine	Ordering Code	d	D	No. of Flutes	l	L
0.5		M5	**MTB 06038 C10 0.5 ISO**	6	3.8	3	10.3	58
0.7	M4		**MTB 06031 C7 0.7 ISO**	6	3.1	3	7.4	58
0.75		M6, M8	**MTB 06045 C10 0.75 ISO**	6	4.5	3	10.1	58
0.75		M12, M14	**MTB 1010 D24 0.75 ISO**	10	10.0	4	24.4	73
0.8	M5		**MTB 06038 C9 0.8 ISO**	6	3.8	3	9.2	58
0.8	M5		**MTB 0604 C13 0.8 ISO**	6	4.0	3	13.2	58
1.0	M6		**MTB 06046 C10 1.0 ISO**	6	4.6	3	10.5	58
1.0	M6		**MTB 06046 C14 1.0 ISO**	6	4.6	3	14.5	58
1.0		M8	**MTB 0606 C12 1.0 ISO**	6	6.0	3	12.5	58
1.0		M10	**MTB 0808 D16 1.0 ISO**	8	8.0	4	16.5	64
1.0		M12	**MTB 1010 D24 1.0 ISO**	10	10.0	4	24.5	73
1.25	M8	M10	**MTB 0606 C14 1.25 ISO**	6	6.0	3	14.4	58
1.25	M8	M10	**MTB 0606 C19 1.25 ISO**	6	6.0	3	19.4	58
1.5	M10	M12	**MTB 08078 C17 1.5 ISO**	8	7.8	3	17.0	64
1.5	M10	M12	**MTB 08078 C24 1.5 ISO**	8	7.8	3	24.8	76
1.5		M14	**MTB 1010 D21 1.5 ISO**	10	10.0	4	21.8	73
1.5		M14-M18	**MTB 1212 D26 1.5 ISO**	12	12.0	4	26.3	84
1.5		M20	**MTB 1616 F33 1.5 ISO**	16	16.0	6	33.8	105
1.75	M12		**MTB 1009 C20 1.75 ISO**	10	9.0	3	20.1	73
1.75	M12		**MTB 1009 C28 1.75 ISO**	10	9.0	3	28.9	73
2.0	M14	M17	**MTB 1010 C27 2.0 ISO**	10	10.0	3	27.0	73
2.0	M14	M17	**MTB 1211 D39 2.0 ISO**	12	11.0	4	39.0	105
2.0	M16	M18, M20	**MTB 12118 D27 2.0 ISO**	12	11.8	4	27.0	84
2.0	M16	M18, M20	**MTB 12118 D39 2.0 ISO**	12	11.8	4	39.0	105
2.0		M26	**MTB 2020 F41 2.0 ISO**	20	20.0	6	41.0	105
2.5	M20		**MTB 1615 E33 2.5 ISO**	16	15.0	5	33.8	105
2.5	M20		**MTB 1615 E48 2.5 ISO**	16	15.0	5	48.8	105
3.0	M24	M28	**MTB 2018 D40 3.0 ISO**	20	18.0	4	40.5	105
3.0	M24	M28	**MTB 2018 D58 3.0 ISO**	20	18.0	4	58.5	120
3.0	M27	M28, M30	**MTB 2020 D43 3.0 ISO**	20	20.0	4	43.5	105

Order example: MTB 08078 C17 1.5 ISO MT7

● First choice ○ Alternative

For thread mills with coolant through the flutes see next page

For small thread mills see pages B09-3, 4, 11, 15, 17 and B11-3, 6



ISO With internal coolant through the flutes

Tools for Internal Thread

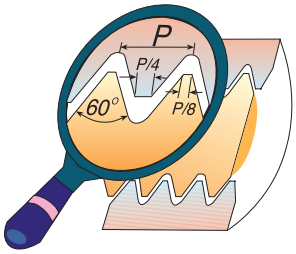

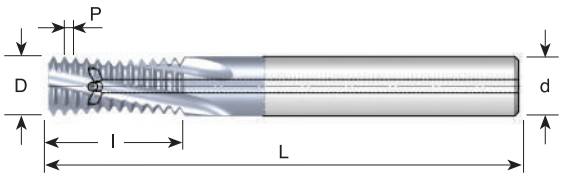



Grade	P	M	K	N	S	H
MT7	●	●	●	○	●	≤47 HRc

Pitch mm	M coarse	M fine	Ordering Code	d	D	No. of Flutes	l	L
1.0	M6	M8	**MTZ 06048 C10 1.0 ISO**	6	4.8	3	10.5	58
1.0		M8, M9	**MTZ 0606 C12 1.0 ISO**	6	6.0	3	12.5	58
1.0		M10	**MTZ 0808 D16 1.0 ISO**	8	8.0	4	16.5	64
1.25	M8	M10	**MTZ 0606 C14 1.25 ISO**	6	6.0	3	14.4	58
1.25	M8	M10	**MTZ 0606 C19 1.25 ISO**	6	6.0	3	19.4	58
1.5	M10	M12	**MTZ 08078 C17 1.5 ISO**	8	7.8	3	17.0	64
1.5	M10	M12	**MTZ 0808 C23 1.5 ISO**	8	8.0	3	23.3	64
1.5		M14	**MTZ 1010 D21 1.5 ISO**	10	10.0	4	21.8	73
1.5		M14, M16	**MTZ 1212 D26 1.5 ISO**	12	12.0	4	26.3	84
1.5		M16, M18	**MTZ 1414 D32 1.5 ISO**	14	14.0	4	32.3	101
1.5		M20	**MTZ 1616 E33 1.5 ISO**	16	16.0	5	33.8	101
1.75	M12		**MTZ 1009 C20 1.75 ISO**	10	9.0	3	20.1	73
1.75	M12		**MTZ 1009 C28 1.75 ISO**	10	9.0	3	28.9	73
2.0	M14	M17	**MTZ 1010 C27 2.0 ISO**	10	10.0	3	27.0	73
2.0	M16	M18, M20	**MTZ 12118 D27 2.0 ISO**	12	11.8	4	27.0	84
2.5	M20		**MTZ 1615 E33 2.5 ISO**	16	15.0	5	33.8	101

Order example: MTZ 08078 C17 1.5 ISO MT7

● First choice ○ Alternative

For small thread mills see pages B09-3, 4, 11, 15, 17 and B11-3, 6



ISO With relieved neck and internal coolant bore

Tools for Internal Thread

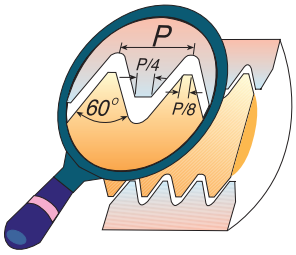

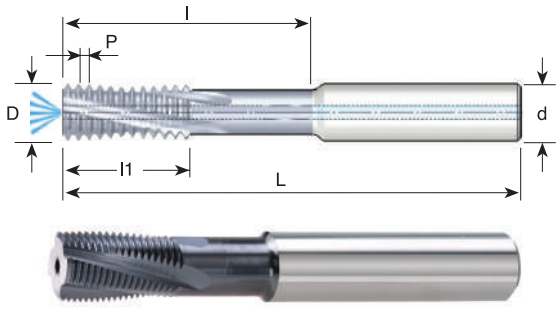

Grade	P	M	K	N	S	H
MT7	●	●	●	○	●	≤47 HRc

Pitch mm	M fine	Ordering Code	d	D	No. of Flutes	l1	l	L
1.0	Ø ≥ 12	**MTQ 1010 D32 1.0 ISO**	10	10.0	4	18.0	32.0	73
1.0	Ø ≥ 14	**MTQ 1212 D38 1.0 ISO**	12	12.0	4	21.0	38.0	84
1.0	Ø ≥ 18	**MTQ 1616 F45 1.0 ISO**	16	16.0	6	26.0	45.0	105
1.5	Ø ≥ 13	**MTQ 1010 D30 1.5 ISO**	10	10.0	4	18.0	30.0	73
1.5	Ø ≥ 15	**MTQ 1212 D34 1.5 ISO**	12	12.0	4	19.5	34.5	84
1.5	Ø ≥ 19	**MTQ 1616 F43 1.5 ISO**	16	16.0	6	25.5	43.5	105
1.5	Ø ≥ 23	**MTQ 2020 F60 1.5 ISO**	20	20.0	6	36.0	60.0	105
2.0	Ø ≥ 16	**MTQ 1212 D42 2.0 ISO**	12	12.0	4	24.0	42.0	84
2.0	Ø ≥ 20	**MTQ 1616 E45 2.0 ISO**	16	16.0	5	26.0	45.0	105
2.0	Ø ≥ 24	**MTQ 2020 F56 2.0 ISO**	20	20.0	6	34.0	56.0	105
3.0	Ø ≥ 22	**MTQ 1616 D45 3.0 ISO**	16	16.0	4	30.0	45.0	105
3.0	Ø ≥ 26	**MTQ 2020 E54 3.0 ISO**	20	20.0	5	33.0	54.0	105
3.5	Ø ≥ 26	**MTQ 2020 D45 3.5 ISO**	20	20.0	4	28.0	45.5	105
4.0	Ø ≥ 31	**MTQ 2525 D64 4.0 ISO**	25	25.0	4	40.0	64.0	160

Order example: MTQ 1010 D30 1.5 ISO MT7

● First choice ○ Alternative

For small thread mills see pages B09-3, 4, 11, 15, 17 and B11-3, 6



ISO Fast MT with internal coolant bore

Tools for Internal Thread

- **A unique line of solid carbide thread milling tools (FMT) for increased productivity and extended tool life.**
- **Large number of flutes results in significantly shorter machining time.**

Carbide grade MT8:

Sub Micron grade with advanced PVD triple coating (ISO K10-K20).
Extremely high heat resistance and smooth cutting operation for high performance in normal and general machining conditions on all materials.

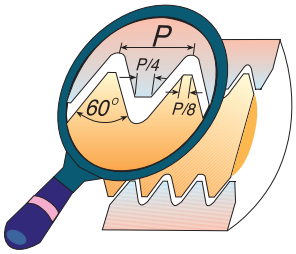

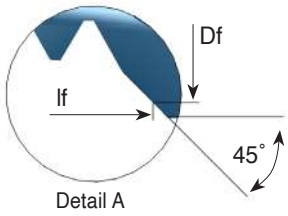

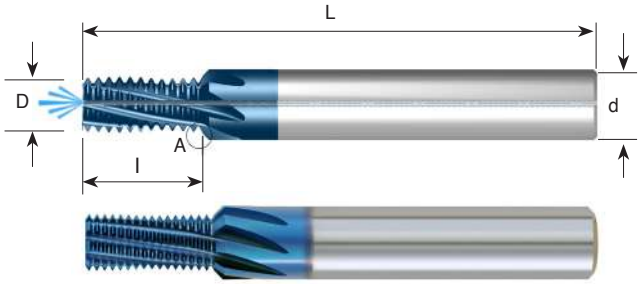

Grade	P	M	K	N	S	H
MT8	●	●	●	○	●	≤52 HRc

Pitch mm	M coarse	M fine	Ordering Code	d	D	Df	Flutes	l	lf	L
0.5	M3	M3.5	***FMT 06024 D6 0.5 ISO**	6	2.4	4.4	4	6.3	7.3	58
0.5		M4,M5	**FMT 06033 E8 0.5 ISO**	6	3.3	5.3	5	8.3	9.3	58
0.7	M4		**FMT 06032 E7 0.7 ISO**	6	3.2	4.8	5	7.4	8.2	58
0.75		M6	**FMT 0805 F12 0.75 ISO**	8	5.0	7.0	6	12.4	13.4	64
0.8	M5		**FMT 0604 E9 0.8 ISO**	6	4.0	5.7	5	9.2	10.1	58
1.0	M6	M8	**FMT 08048 F10 1.0 ISO**	8	4.8	6.8	6	10.5	11.5	64
1.0		M10,M12	**FMT 12087 G20 1.0 ISO**	12	8.7	11.7	7	20.5	22.0	84
1.25	M8	M10	**FMT 10064 G14 1.25 ISO**	10	6.4	9.6	7	14.4	16.0	73
1.5	M10	M14	**FMT 1008 G17 1.5 ISO**	10	8.0	9.8	7	17.3	18.2	73
1.75	M12		**FMT 12095 G20 1.75 ISO**	12	9.5	11.7	7	20.1	21.2	84
2.0	M14, M16	M18	**FMT 1411 G29 2.0 ISO**	14	11.0	13.4	7	29.0	30.2	83

Order example: FMT 1008 G17 1.5 ISO MT8

● First choice ○ Alternative

* Without internal coolant

For small thread mills see page B09-17



ISO With internal coolant bore

Tools for Internal Thread

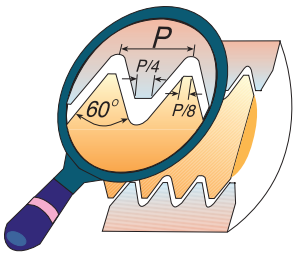

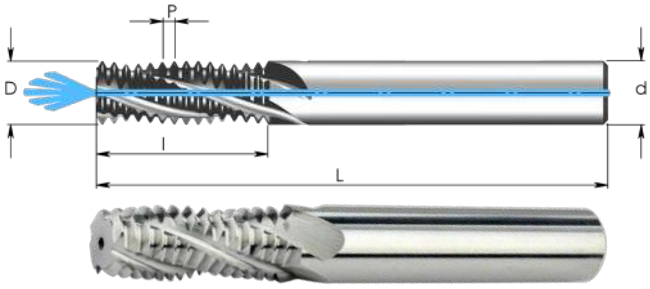

Thread length: 2xD

Grade	P	M	K	N	S	H
K20	○	○	●	●	●	

Pitch mm	M coarse	M fine	Ordering Code	d	D	No. of Flutes	l	L
0.5	M3	M4	* AMT 03024 C6 0.5 ISO	3	2.4	3	6.8	39
0.5		M5	AMT 06043 C10 0.5 ISO	6	4.3	3	10.8	58
0.7	M4		AMT 06031 C8 0.7 ISO	6	3.1	3	8.8	58
0.75		M6	AMT 0605 C13 0.75 ISO	6	5.0	3	13.1	58
0.8	M5		AMT 0604 C10 0.8 ISO	6	4.0	3	10.8	58
1.0	M6		AMT 06048 C13 1.0 ISO	6	4.8	3	13.5	58
1.0		M10	AMT 0808 D21 1.0 ISO	8	8.0	4	21.5	64
1.25	M8	M10	AMT 08064 C16 1.25 ISO	8	6.4	3	16.9	64
1.5	M10		AMT 0808 C21 1.5 ISO	8	8.0	3	21.8	64
1.5		M14	AMT 12112 D29 1.5 ISO	12	11.2	4	29.3	84
1.75	M12		AMT 10095 D25 1.75 ISO	10	9.5	4	25.4	73
2.0	M16	M17	AMT14126 D35 2.0 ISO	14	12.6	4	35.0	83

Order example: AMT 08064 C16 1.25 ISO K20

* Without internal coolant

ISO With internal coolant bore and cutting chamfer

Tools for Internal thread

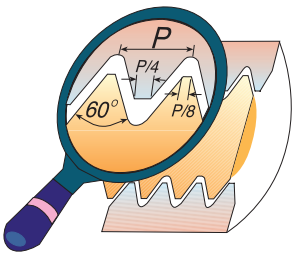

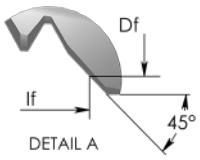

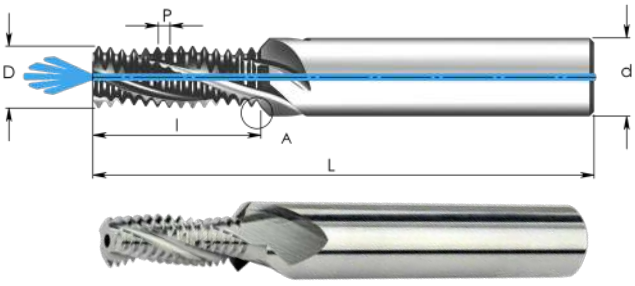

Thread length: 2xD

Grade	P	M	K	N	S	H
K20	○	○	●	●	●	

Pitch mm	M coarse	M fine	Ordering Code	d	D	Df	No. of Flutes	l	If	L
0.8	M5		AMT 0604 C10 0.8 ISO-C	6	4.0	5.3	3	10.8	11.5	58
1.0	M6		AMT 08048 C13 1.0 ISO-C	8	4.8	6.4	3	13.5	14.3	64
1.25	M8	M10	AMT 10064 C16 1.25 ISO-C	10	6.4	8.3	3	16.9	17.9	73
1.5	M10		AMT 1208 C21 1.5 ISO-C	12	8.0	10.4	3	21.8	23.0	84

Order example: AMT 10064 C16 1.25 ISO-C K20

For information about AMT Thread Mills and cutting data see page B12-16

● First choice ○ Alternative

UN

Tools for Internal Thread

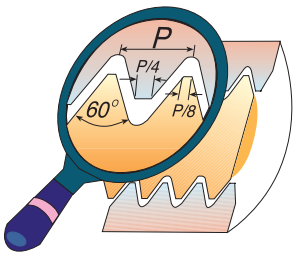

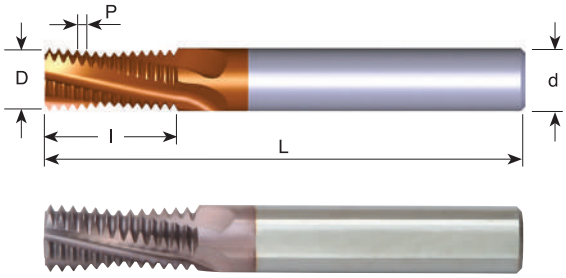

Grade	P	M	K	N	S	H
MT7	●	○	●	○	○	

Pitch TPI	UNC	UNF	UNEF	Ordering Code	d	D	No. of Flutes	l	L
40	5			MT 06025 C6 40 UN	6	2.5	3	6.0	58
32	8	10	12	MT 06032 C6 32 UN	6	3.2	3	6.8	58
28		1/4		MT 0604 C11 28 UN	6	4.0	3	11.3	58
28		1/4		MT 06052 C15 28 UN	6	5.2	3	15.0	58
28			7/16-1/2	MT 0606 C14 28 UN	6	6.0	3	14.1	58
24		5/16		MT 0605 C14 24 UN	6	5.0	3	14.3	58
24		3/8	9/16-5/8	MT 0807 C21 24 UN	8	7.0	3	20.6	64
20	1/4			MT 06045 C12 20 UN	6	4.5	3	12.1	58
20		7/16-1/2		MT 0807 C21 20 UN	8	7.0	3	21.0	64
20			3/4-1	MT 1212 E27 20 UN	12	12.0	5	27.3	84
18	5/16			MT 0605 C14 18 UN	6	5.0	3	14.8	58
18	5/16			MT 0606 C20 18 UN	6	6.0	3	20.5	58
18		9/16-5/8	1 1/8-1 5/8	MT 1010 D26 18 UN	10	10.0	4	26.1	73
16	3/8			MT 0606 C16 16 UN	6	6.0	3	16.7	58
16	3/8			MT 08074 C24 16 UN	8	7.4	3	24.6	64
16		3/4		MT 1212 D31 16 UN	12	12.0	4	31.0	84
14	7/16			MT 0807 C20 14 UN	8	7.0	3	20.9	64
14	7/16			MT 10085 C28 14 UN	10	8.5	3	28.1	73
14		7/8		MT 1615 E37 14 UN	16	15.0	5	37.2	105
13	1/2			MT 0808 C22 13 UN	8	8.0	3	22.5	64
13	1/2			MT 10098 D32 13 UN	10	9.8	4	32.2	73
12	9/16			MT 1010 C26 12 UN	10	10.0	3	26.5	73
12	9/16			MT 12116 D37 12 UN	12	11.6	4	37.0	84
12		1-1 1/2		MT 1616 E41 12 UN	16	16.0	5	41.3	105
11	5/8			MT 1010 C28 11 UN	10	10.0	3	28.9	73
11	5/8			MT 1212 D38 11 UN	12	12.0	4	38.1	84
10	3/4			MT 1212 C34 10 UN	12	12.0	3	34.3	84
10	3/4			MT 16147 E49 10 UN	16	14.7	5	49.5	105
9	7/8			MT 1615 C38 9 UN	16	15.0	3	38.1	105
8	1			MT 1616 C42 8 UN	16	16.0	3	42.9	105
7	1 1/8 - 1 1/4			MT 2020 D45 7 UN	20	20.0	4	45.3	105

Order example: MT 1615 E37 14 UN MT7

● First choice ○ Alternative

For thread mills with coolant bore see following pages

For small thread mills see pages B09-5, 6, 12, 15, 17 and B11-4, 6



UN With internal coolant bore

Tools for Internal Thread

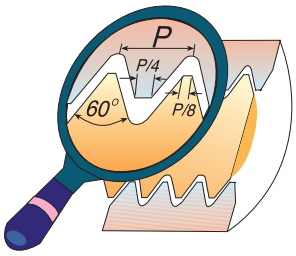

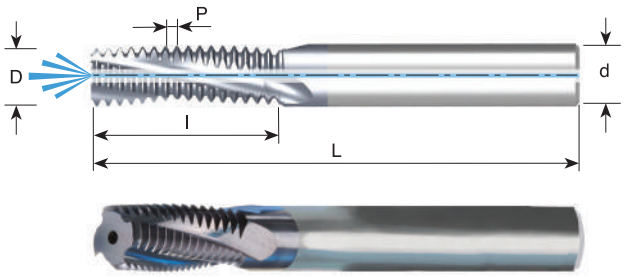

Grade	P	M	K	N	S	H
MT7	●	●	●	○	●	≤47 HRc

Pitch TPI	UNC	UNF	UNEF	Ordering Code	d	D	No. of Flutes	l	L
32	8	10	12	**MTB 06032 C6 32 UN**	6	3.2	3	6.8	58
32			5/16	**MTB 0606 C14 32 UN**	6	6.0	3	14.7	58
32			3/8	**MTB 0808 D18 32 UN**	8	8.0	4	18.7	64
28		1/4		**MTB 0605 C11 28 UN**	6	5.0	3	11.3	58
28		1/4		**MTB 06052 C15 28 UN**	6	5.2	3	15.0	58
28			7/16-1/2	**MTB 0606 C14 28 UN**	6	6.0	3	14.1	58
24		5/16		**MTB 08066 C14 24 UN**	8	6.6	3	14.3	64
24		3/8	9/16-5/8	**MTB 0808 D21 24 UN**	8	8.0	4	20.6	64
20	1/4			**MTB 06047 C12 20 UN**	6	4.7	3	12.1	58
20		7/16-1/2		**MTB 0808 C21 20 UN**	8	8.0	3	21.0	64
20		1/2		**MTB 1010 D22 20 UN**	10	10.0	4	22.3	73
20			3/4-1	**MTB 1212 E27 20 UN**	12	12.0	5	27.3	84
18	5/16			**MTB 06056 C14 18 UN**	6	5.6	3	14.8	58
18	5/16			**MTB 0606 C20 18 UN**	6	6.0	3	20.5	58
18		9/16-5/8	1 1/8-1 5/8	**MTB 12113 D26 18 UN**	12	11.3	4	26.1	84
16	3/8			**MTB 08067 C16 16 UN**	8	6.7	3	16.7	64
16	3/8			**MTB 08074 C24 16 UN**	8	7.4	3	24.6	64
16		3/4		**MTB 1212 D31 16 UN**	12	12.0	4	31.0	84
14	7/16			**MTB 08077 C20 14 UN**	8	7.7	3	20.9	64
14	7/16			**MTB 10085 C28 14 UN**	10	8.5	3	28.1	73
14		7/8		**MTB 1616 E37 14 UN**	16	16.0	5	37.2	105
13	1/2			**MTB 10092 C22 13 UN**	10	9.2	3	22.5	73
13	1/2			**MTB 10098 D32 13 UN**	10	9.8	4	32.2	73
12	9/16			**MTB 12105 C26 12 UN**	12	10.5	3	26.5	84
12	9/16			**MTB 12116 D37 12 UN**	12	11.6	4	37.0	84
12		1-1 1/2		**MTB 1616 E41 12 UN**	16	16.0	5	41.3	105
11	5/8			**MTB 12114 C28 11 UN**	12	11.4	3	28.9	84
11	5/8			**MTB 1212 D38 11 UN**	12	12.0	4	38.1	84
10	3/4			**MTB 16144 D34 10 UN**	16	14.4	4	34.3	105
10	3/4			**MTB 16147 E49 10 UN**	16	14.7	5	49.5	105
9	7/8			**MTB 1616 C38 9 UN**	16	16.0	3	38.1	105
8	1			**MTB 20195 D42 8 UN**	20	19.5	4	42.9	105
7	1 1/8 - 1 1/4			**MTB 2020 D45 7 UN**	20	20.0	4	45.3	105

Order example: MTB 1212 D31 16 UN MT7

● First choice ○ Alternative

For thread mills with coolant through the flutes see next page

For small thread mills see pages B09-5, 6, 12, 15, 17 and B11-4, 6



UN With internal coolant through the flutes

Tools for Internal Thread

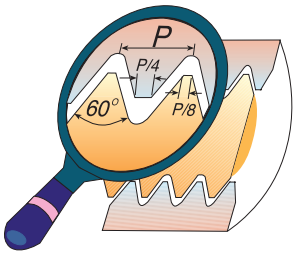

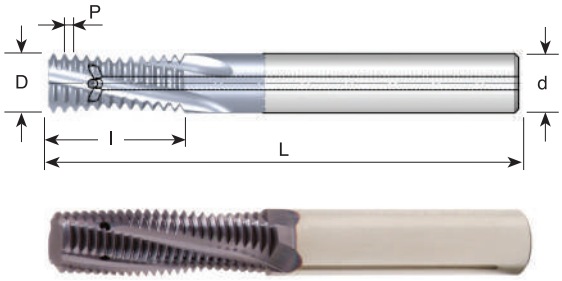

Grade	P	M	K	N	S	H
MT7	●	●	●	○	●	≤47 HRc

Pitch TPI	UNC	UNF	UNEF	Ordering Code	d	D	No. of Flutes	l	L
28		1/4		**MTZ 0605 C11 28 UN**	6	5.0	3	11.3	58
28			7/16-1/2	**MTZ 0606 C14 28 UN**	6	6.0	3	14.1	58
24		5/16		**MTZ 08066 C14 24 UN**	8	6.6	3	14.3	64
24		3/8	9/16-5/8	**MTZ 0808 D21 24 UN**	8	8.0	4	20.6	64
20		7/16		**MTZ 0808 C21 20 UN**	8	8.0	3	21.0	64
20		1/2		**MTZ 1010 D22 20 UN**	10	10.0	4	22.3	73
20			3/4-1	**MTZ 1212 E27 20 UN**	12	12.0	5	27.3	84
18	5/16			**MTZ 06056 C14 18 UN**	6	5.6	3	14.8	58
18	5/16			**MTZ 0606 C20 18 UN**	6	6.0	3	20.5	58
18		9/16-5/8	1 1/8-1 5/8	**MTZ 12113 D26 18 UN**	12	11.3	4	26.1	84
16	3/8			**MTZ 08067 C16 16 UN**	8	6.7	3	16.7	64
16	3/8			**MTZ 08074 C24 16 UN**	8	7.4	3	24.6	64
16		3/4		**MTZ 1212 D31 16 UN**	12	12.0	4	31.0	84
14	7/16			**MTZ 08077 C20 14 UN**	8	7.7	3	20.9	64
14	7/16			**MTZ 10085 C28 14 UN**	10	8.5	3	28.1	73
14		7/8		**MTZ 1616 E37 14 UN**	16	16.0	5	37.2	101
13	1/2			**MTZ 10092 C22 13 UN**	10	9.2	3	22.5	73
13	1/2			**MTZ 10098 D32 13 UN**	10	9.8	4	32.2	73
12	9/16			**MTZ 12105 C26 12 UN**	12	10.5	3	26.5	84
12	9/16			**MTZ 12116 D37 12 UN**	12	11.6	4	37.0	84
12		1-1 1/2		**MTZ 1616 E41 12 UN**	16	16.0	5	41.3	101
11	5/8			**MTZ 12114 C28 11 UN**	12	11.4	3	28.9	84
10	3/4			**MTZ 16144 D34 10 UN**	16	14.4	4	34.3	105

Order example: MTZ 0808 D21 24 UN MT7

● First choice ○ Alternative

For small thread mills see pages B09-5, 6, 12, 15, 17 and B11-4, 6



UN With relieved neck and internal coolant bore

Tools for Internal Thread

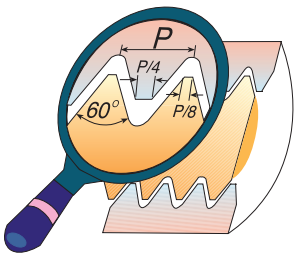

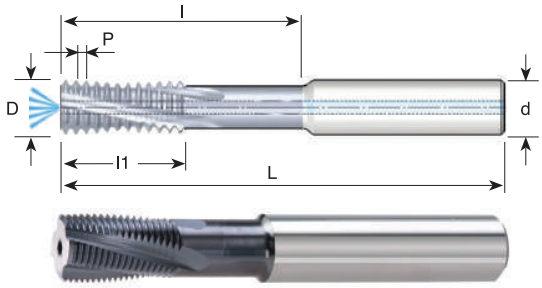

Grade	P	M	K	N	S	H
MT7	●	●	●	○	●	≤47 HRc

Pitch TPI	Thread size	Ordering Code	d	D	No. of Flutes	l1	l	L
20	Ø ≥ 12	**MTQ 1010 D30 20 UN**	10	10.0	4	17.8	30.5	73
20	Ø ≥ 14	**MTQ 1212 E35 20 UN**	12	12.0	5	20.3	35.6	84
20	Ø ≥ 18	**MTQ 1616 F43 20 UN**	16	16.0	6	25.4	43.2	105
18	Ø ≥ 15	**MTQ 1212 D35 18 UN**	12	12.0	4	19.7	35.3	84
16	Ø ≥ 15	**MTQ 1212 D35 16 UN**	12	12.0	4	20.7	35.0	84
16	Ø ≥ 19	**MTQ 1616 E42 16 UN**	16	16.0	5	25.4	42.9	105
16	Ø ≥ 23	**MTQ 2020 F58 16 UN**	20	20.0	6	36.5	58.8	105
14	Ø ≥ 20	**MTQ 1616 E45 14 UN**	16	16.0	5	25.4	45.3	105
12	Ø ≥ 16	**MTQ 1212 D42 12 UN**	12	12.0	4	25.4	42.3	84
12	Ø ≥ 24	**MTQ 2020 E55 12 UN**	20	20.0	5	33.9	55.1	105

Order example: MTQ 1212 D35 16 UN MT7

● First choice ○ Alternative

For small thread mills see pages B09-5, 6, 12, 15, 17 and B11-4, 6



UN Fast MT with internal coolant bore

Tools for Internal Thread

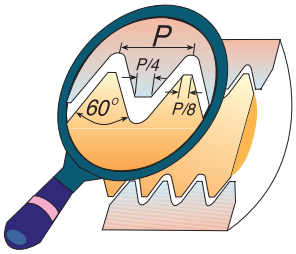

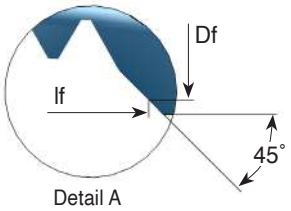

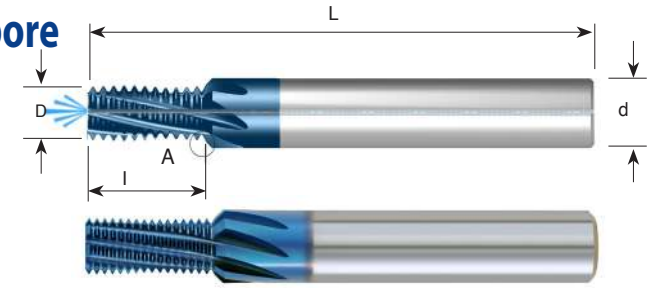

Grade	P	M	K	N	S	H
MT8	●	●	●	○	●	≤52 HRc

Pitch TPI	UNC	UNF	UNEF	Ordering Code	d	D	Df	No. of Flutes	l	lf	L
28		1/4		**FMT 08052 F11 28 UN**	8	5.2	7.0	6	11.3	12.3	64
28			7/16-1/2	**FMT 12098 H19 28 UN**	12	9.8	11.8	8	19.5	20.5	84
24		5/16		**FMT 10066 G14 24 UN**	10	6.6	9.6	7	14.3	15.8	73
24		3/8	9/16, 5/8, 11/16	**FMT 12082 G17 24 UN**	12	8.2	10.6	7	17.5	18.7	84
20	1/4			***FMT 08048 E12 20 UN**	8	4.8	6.8	5	12.1	13.1	64
20		7/16		**FMT 12092 H21 20 UN**	12	9.2	11.4	8	21.0	22.1	84
20		1/2	3/4, 7/8, 1	**FMT 14111 H22 20 UN**	14	11.1	13.5	8	22.2	23.4	84
18	5/16			**FMT 1006 F14 18 UN**	10	6.0	8.4	6	14.8	16.0	73
18		9/16, 5/8	1 1/16, 1 1/8	**FMT 16125 H26 18 UN**	16	12.5	15.0	8	26.1	27.4	105
16	3/8			**FMT 10074 F16 16 UN**	10	7.4	9.6	6	16.7	17.8	73
16		3/4		**FMT 20167 H34 16 UN**	20	16.7	19.3	8	34.1	35.4	105
14	7/16	7/8		**FMT 12085 F20 14 UN**	12	8.5	10.7	6	20.9	22.0	84
13	1/2			**FMT 12098 F24 13 UN**	12	9.8	11.8	6	24.4	25.4	84
12	9/16	1		**FMT 16116 F26 12 UN**	16	11.6	15.2	6	26.5	28.3	105
11	5/8			**FMT 1612 F33 11 UN**	16	12.0	15.4	6	33.4	35.1	105

Order example: FMT 12092 H21 20 UN
* without internal coolant
For small thread mills see page B09-17

UN With internal coolant bore

Tools for Internal Thread

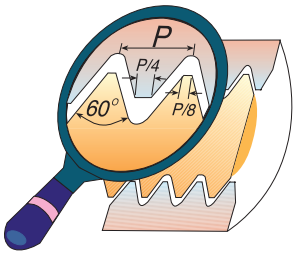

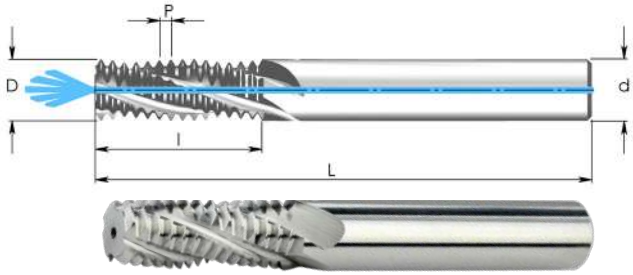

Thread length: 2xD

Grade	P	M	K	N	S	H
K20	○	○	●	●	●	

Pitch TPI	UNC	UNF	UNEF	Ordering Code	d	D	No. of Flutes	l	L
32	8	10	12	**AMT 06032 C9 32 UN**	6	3.2	3	9.1	58
28		1/4		**AMT 06052 C14 28 UN**	6	5.2	3	14.0	58
24		3/8	9/16-5/8	**AMT 0808 D20 24 UN**	8	8.0	4	20.6	64
20	1/4			**AMT 06048 C14 20 UN**	6	4.8	3	14.6	58
20		7/16		**AMT 10092 C23 20 UN**	10	9.2	3	23.5	73
18	5/16			**AMT 0606 C17 18 UN**	6	6.0	3	17.6	58
18		9/16-5/8	1 1/8 - 1 5/8	**AMT 1212 D30 18 UN**	12	12.0	4	30.3	84
16	3/8			**AMT 08074 C21 16 UN**	8	7.4	3	21.4	64
16		3/4		**AMT 1616 E38 16 UN**	16	16.0	5	38.9	105

For information about AMT Thread Mills and cutting data see page B12-16

● First choice ○ Alternative

UN With internal coolant bore and cutting chamfer

Tools for Internal Thread

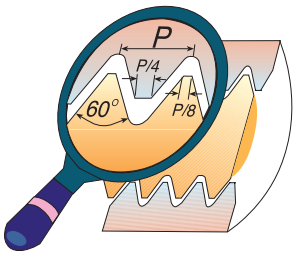

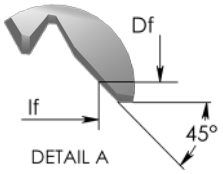

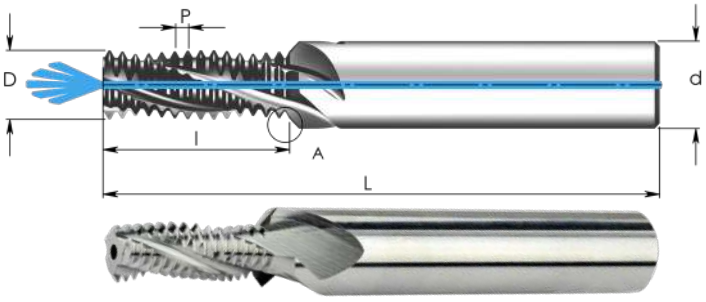

Thread length: 2xD

Grade	P	M	K	N	S	H
K20	○	○	●	●	●	

Pitch TPI	UNC	UNF	UNEF	Ordering Code	d	D	Df	No. of Flutes	l	lf	L
20	1/4			**AMT 08048 C14 20UN-C**	8	4.8	6.8	3	14.6	15.6	64
18	5/16			**AMT 1006 C17 18UN-C**	10	6.0	8.4	3	17.6	18.8	73
16	3/8			**AMT 12074 C21 16UN-C**	12	7.4	10.0	3	21.4	22.7	84

Order example: AMT 12074 C21 16UN-C K20

For information about AMT Thread Mills and cutting data see page B12-16

G (55°) BSF, BSP

Same Tool for Internal and External Thread

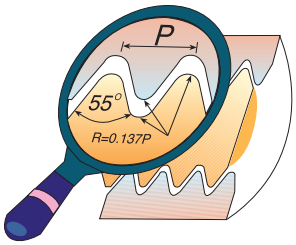

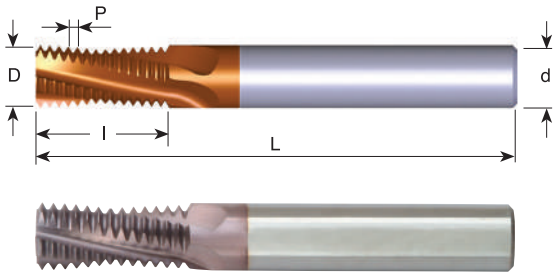

Grade	P	M	K	N	S	H
MT7	●	○	●	○	○	

Pitch TPI	Standard	Ordering Code	d	D	No. of Flutes	l	L
28	G1/16-G1/8	**MT 0606 C9 28 W**	6	6.0	3	9.5	58
19	G1/4-3/8	**MT 0808 C14 19 W**	8	8.0	3	14.0	64
14	G1/2-7/8	**MT 1212 D19 14 W**	12	12.0	4	19.0	84
14	G1/2-7/8	**MT 1212 D26 14 W**	12	12.0	4	26.3	84
11	G≥1	**MT 1212 C24 11 W**	12	12.0	3	24.2	84
11	G≥1	**MT 1616 D38 11 W**	16	16.0	4	38.1	105
11	G≥1	**MT 2020 E47 11 W**	20	20.0	5	47.3	105

Order example: MT 1212 D19 14 W MT7

For small thread mills see pages B09-7, B09-14 and B11-5
For thread mills with coolant see next page



● First choice ○ Alternative

G (55°) BSF, BSP With internal coolant bore

Same Tool for Internal and External Thread

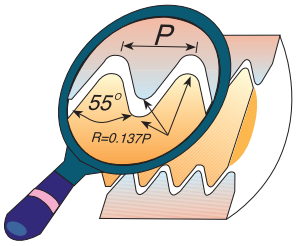

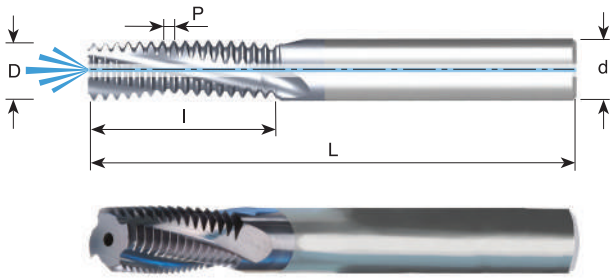

Grade	P	M	K	N	S	H
MT7	●	●	●	○	●	≤47 HRc

Pitch TPI	Standard	Ordering Code	d	D	No. of Flutes	l	L
28	G1/8	**MTB 08078 C14 28 W**	8	7.8	3	14.1	64
28	G1/8	**MTB 0808 C20 28 W**	8	8.0	3	20.4	64
19	G1/4	**MTB 1010 D16 19 W**	10	10.0	4	16.7	73
19	G1/4	**MTB 1211 D27 19 W**	12	11.0	4	27.4	84
19	G3/8	**MTB 1414 D26 19 W**	14	14.0	4	26.1	83
19	G3/8	**MTB 1414 D34 19 W**	14	14.0	4	34.1	83
14	G1/2-7/8	**MTB 1616 E26 14 W**	16	16.0	5	26.3	105
11	G≥1	**MTB 1616 D38 11 W**	16	16.0	4	38.1	105
11	G≥1	**MTB 2020 E47 11 W**	20	20.0	5	47.3	105

Order example: MTB 1010 D16 19 W MT7

For small thread mills see pages B09-7, B09-14 and B11-5

G (55°) BSF, BSP With internal coolant through the flutes

Same Tool for Internal and External Thread

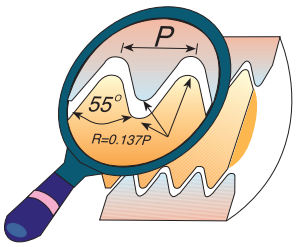

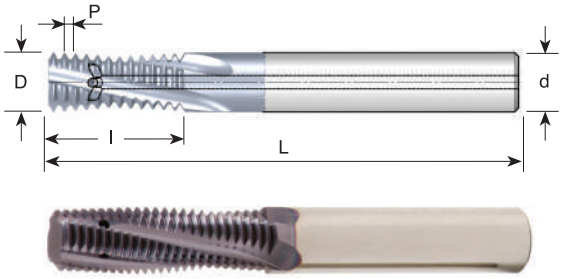

Grade	P	M	K	N	S	H
MT7	●	●	●	○	●	≤47 HRc

Pitch TPI	Standard	Ordering Code	d	D	No. of Flutes	l	L
28	G1/8	**MTZ 08078 C14 28 W**	8	7.8	3	14.1	64
19	G1/4-3/8	**MTZ 1010 D16 19 W**	10	10.0	4	16.7	73
14	G1/2-7/8	**MTZ 1616 E26 14 W**	16	16.0	5	26.3	101
11	G≥1	**MTZ 1616 D38 11 W**	16	16.0	4	38.1	101

Order example: MTZ 08078 C14 28 W MT7

For small thread mills see pages B09-7, B09-14 and B11-5



● First choice ○ Alternative

G (55°) Fast MT With internal coolant bore

Same Tool for Internal and External Thread

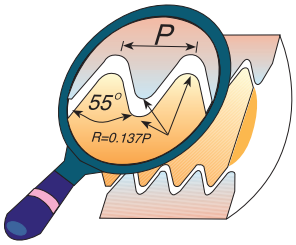

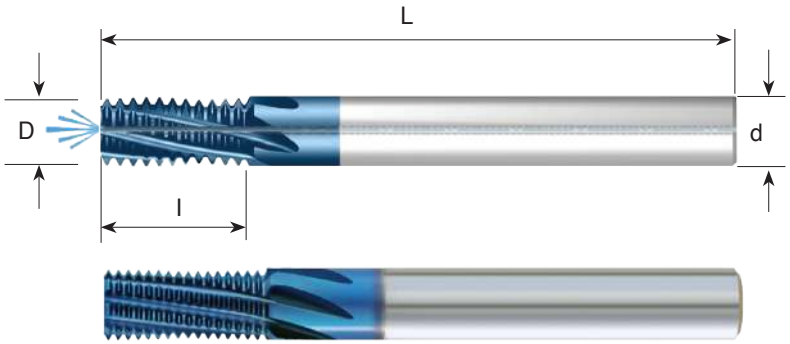

Grade	P	M	K	N	S	H
MT8	●	●	●	○	●	≤52 HRc

Pitch TPI	Standard	Ordering Code	d	D	No. of Flutes	l	L
28	G1/8	**FMT 08078 H14 28 W**	8	7.8	8	14.1	64
19	G1/4-3/8	**FMT 1010 G16 19 W**	10	10.0	7	16.7	73
14	G1/2-7/8	**FMT 1414 H26 14 W**	14	14.0	8	26.3	84
11	G≥1	**FMT 1616 H38 11 W**	16	16.0	8	38.1	105

Order example: FMT 1616 H38 11W MT8

● First choice ○ Alternative

Whitworth With internal coolant bore

Same Tool for Internal and External Thread

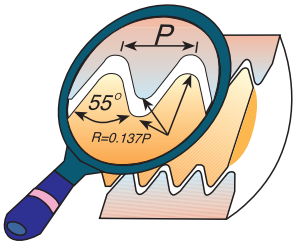

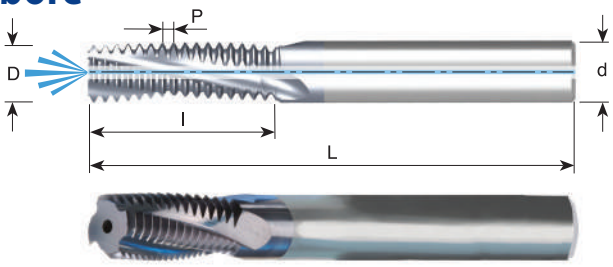

Grade	P	M	K	N	S	H
MT7	●	●	●	○	●	≤47 HRc

Pitch TPI	BSW	BSF	Ordering Code	d	D	No. of Flutes	l	L
20	1/4		**MTB 06046 C13 20 W**	6	4.6	3	13.3	58
20		3/8	**MTB 08076 D19 20 W**	8	7.6	4	19.7	64
18	5/16		**MTB 06056 C16 18 W**	6	5.6	3	16.2	58
18		7/16	**MTB 10088 D23 18 W**	10	8.8	4	23.3	73
16	3/8		**MTB 0807 D19 16 W**	8	7.0	4	19.8	64
16		1/2-9/16	**MTB 1010 E26 16 W**	10	10.0	5	26.1	73
14	7/16		**MTB 0808 D22 14 W**	8	8.0	4	22.7	64
14		5/8-11/16	**MTB 14128 E31 14 W**	14	12.8	5	31.8	83
12	1/2-9/16	3/4-13/16	**MTB 1009 D26 12 W**	10	9.0	4	26.5	73
11	5/8	7/8	**MTB 12118 E33 11 W**	12	11.8	5	33.5	84
10	3/4	1	**MTB 1414 E39 10 W**	14	14.0	5	39.4	105
9	7/8	1 1/8	**MTB 1616 E43 9 W**	16	16.0	5	43.7	105

Order example: MTB 06046 C13 20 W MT7

Whitworth With internal coolant through the flutes

Same Tool for Internal and External Thread

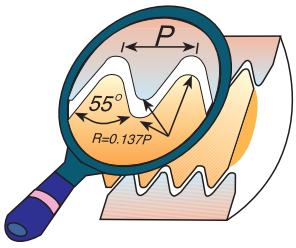

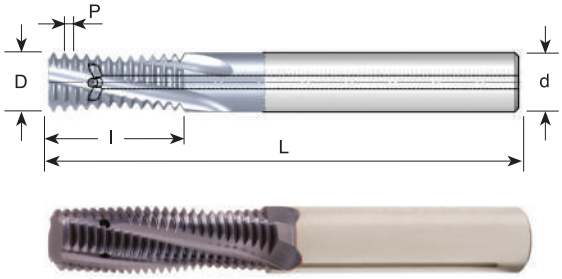

Grade	P	M	K	N	S	H
MT7	●	●	●	○	●	≤47 HRc

Pitch TPI	BSW	BSF	Ordering Code	d	D	No. of Flutes	l	L
20	1/4	3/8	* **MTZ 06046 C12 20 W**	6	4.6	3	12.1	58
18	5/16	7/16	**MTZ 06053 C14 18 W**	6	5.3	3	14.8	58
16	3/8		**MTZ 08068 C16 16 W**	8	6.8	3	16.7	64
16		1/2-9/16	**MTZ 10092 D24 16 W**	10	9.2	4	24.6	73
14	7/16	5/8-11/16	**MTZ 08078 D20 14 W**	8	7.8	4	20.9	64
12	1/2	3/4-13/16	**MTZ 10086 D24 12 W**	10	8.6	4	24.4	73
11	5/8	7/8	**MTZ 12109 D28 11 W**	12	10.9	4	28.9	84

Order example: MTZ 08068 C16 16 W MT7

* Cutter without coolant

● First choice ○ Alternative

BSPT
Same Tool for Internal and External Thread

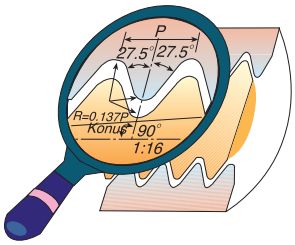

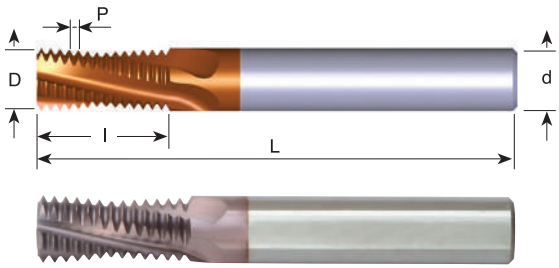

Grade	P	M	K	N	S	H
MT7	●	○	●	○	○	

Pitch TPI	Standard	Ordering Code	d	D	No. of Flutes	l	L
28	RC1/16-1/8	**MT 0606 C9 28 BSPT**	6	6.0	3	9.5	58
19	RC1/4-3/8	**MT 0808 C14 19 BSPT**	8	8.0	3	14.0	64
14	RC1/2-7/8	**MT 1212 D19 14 BSPT**	12	12.0	4	19.1	84
11	RC1-2	**MT 1616 D28 11 BSPT**	16	16.0	4	28.9	105

Order example: MT 1616 D28 11 BSPT MT7

For thread mills with coolant through the flutes see next page

For conical preparation end mills see page B08-23

BSPT With internal coolant bore
Same Tool for Internal and External Thread

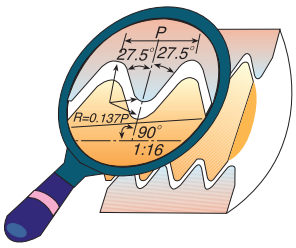

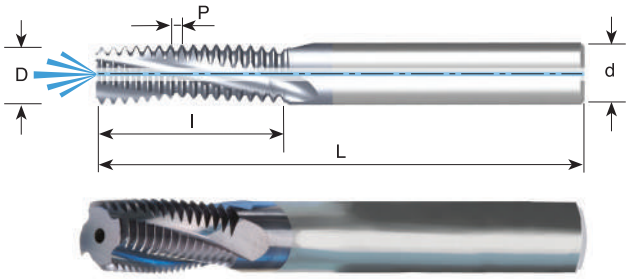

Grade	P	M	K	N	S	H
MT7	●	●	●	○	●	≤47 HRc

Pitch TPI	Standard	Ordering Code	d	D	No. of Flutes	l	L
28	RC1/8	**MTB 08078 C14 28 BSPT**	8	7.8	3	14.1	64
19	RC1/4-3/8	**MTB 1010 D16 19 BSPT**	10	10.0	4	16.7	73
14	RC1/2-7/8	**MTB 1616 E26 14 BSPT**	16	16.0	5	26.3	105
11	RC1-2	**MTB 1616 D28 11 BSPT**	16	16.0	4	28.9	105

Order example: MTB 08078 C14 28 BSPT MT7

● First choice ○ Alternative

BSPT With internal coolant through the flutes

Same Tool for Internal and External Thread

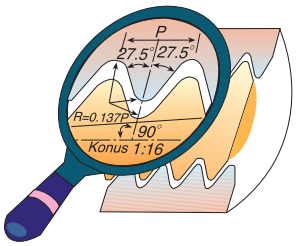

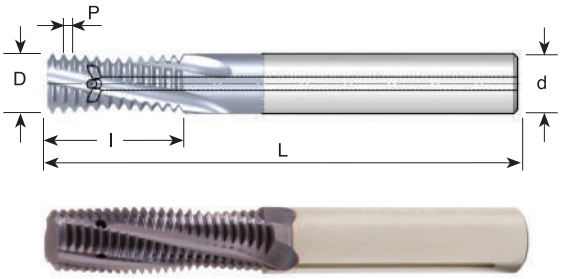

Grade	P	M	K	N	S	H
MT7	●	●	●	○	●	≤47 HRc

Pitch TPI	Standard	Ordering Code	d	D	No. of Flutes	l	L
28	RC1/8	**MTZ 08078 C14 28 BSPT**	8	7.8	3	14.1	64
19	RC1/4-3/8	**MTZ 1010 D16 19 BSPT**	10	10.0	4	16.7	73
14	RC1/2-7/8	**MTZ 1616 E26 14 BSPT**	16	16.0	5	26.3	101
11	RC1-2	**MTZ 1616 D28 11 BSPT**	16	16.0	4	28.9	101

Order example: MTZ 1010 D16 19 BSPT MT7

● First choice ○ Alternative

For conical preparation end mills see page B08-23

NPT

Same Tool for Internal and External Thread

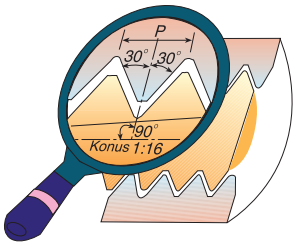

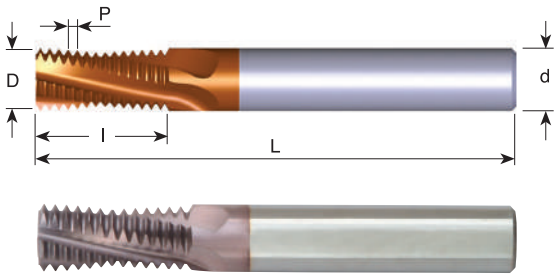

Grade	P	M	K	N	S	H
MT7	●	○	●	○	○	

Pitch TPI	Standard	Ordering Code	d	D	No. of Flutes	l	L
27	1/16-1/8	**MT 0606 C9 27 NPT**	6	6.0	3	9.9	58
18	1/4-3/8	**MT 0808 C14 18 NPT**	8	8.0	3	14.8	64
14	1/2-3/4	**MT 1212 D20 14 NPT**	12	12.0	4	20.9	84
11.5	1-2	**MT 1616 D27 11.5 NPT**	16	16.0	4	27.6	105
8	≥2 1/2	**MT 2020 D39 8 NPT**	20	20.0	4	39.7	105

Order example: MT 0808 C14 18 NPT MT7

NPT With internal coolant bore

Same Tool for Internal and External Thread

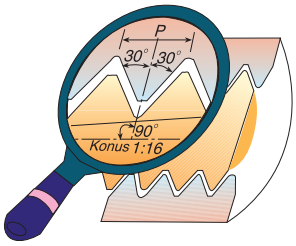

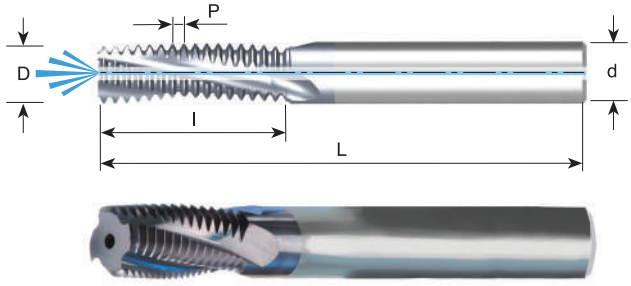

Grade	P	M	K	N	S	H
MT7	●	●	●	○	●	≤47 HRc

Pitch TPI	Standard	Ordering Code	d	D	No. of Flutes	l	L
27	1/8	**MTB 08076 C10 27 NPT**	8	7.6	3	10.8	64
18	1/4-3/8	**MTB 1010 D16 18 NPT**	10	10.0	4	16.2	73
14	1/2-3/4	**MTB 16155 D22 14 NPT**	16	15.5	4	22.7	105
11.5	1-2	**MTB 2020 D29 11.5 NPT**	20	20.0	4	29.8	105
8	≥2 1/2	**MTB 2020 D39 8 NPT**	20	20.0	4	39.7	105

Order example: MTB 1010 D16 18 NPT MT7

For thread mills with coolant through the flutes see next page

For conical preparation end mills see page B08-23

● First choice ○ Alternative

NPT With internal coolant through the flutes

Same Tool for Internal and External Thread

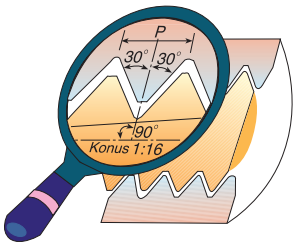

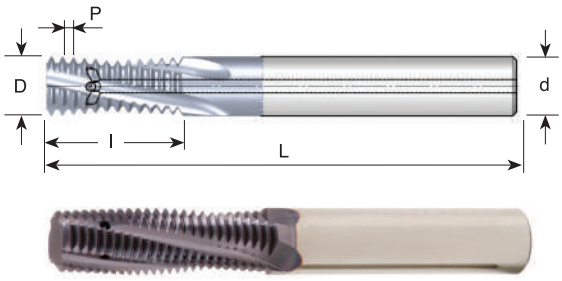

Grade	P	M	K	N	S	H
MT7	●	●	●	○	●	≤47 HRc

Pitch TPI	Standard	Ordering Code	d	D	No. of Flutes	l	L
27	1/8	**MTZ 08076 C10 27 NPT**	8	7.6	3	10.8	64
18	1/4-3/8	**MTZ 1010 D16 18 NPT**	10	10.0	4	16.2	73
14	1/2-3/4	**MTZ 16155 D22 14 NPT**	16	15.5	4	22.7	101

Order example: MTZ 08076 C10 27 NPT MT7

NPTF

Same Tool for Internal and External Thread

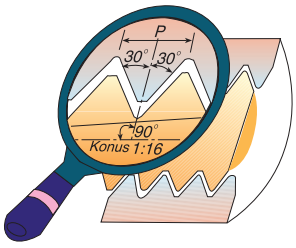

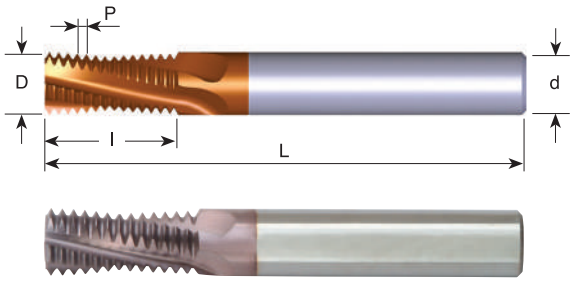

Grade	P	M	K	N	S	H
MT7	●	○	●	○	○	

Pitch TPI	Standard	Ordering Code	d	D	No. of Flutes	l	L
27	1/16-1/8	**MT 0606 C9 27 NPTF**	6	6.0	3	9.9	58
18	1/4-3/8	**MT 0808 C14 18 NPTF**	8	8.0	3	14.8	64
14	1/2-3/4	**MT 1212 D20 14 NPTF**	12	12.0	4	20.9	84
11.5	1-2	**MT 1616 D27 11.5 NPTF**	16	16.0	4	27.6	105
8	≥2 1/2	**MT 2020 D39 8 NPTF**	20	20.0	4	39.7	105

Order example: MT 1212 D20 14 NPTF MT7

For thread mills with coolant bore see next page

For conical preparation end mills see page B08-23

● First choice ○ Alternative

NPTF With internal coolant bore

Same Tool for Internal and External Thread

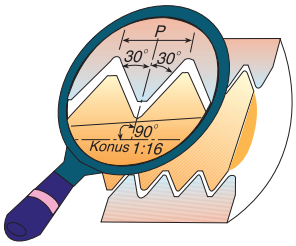

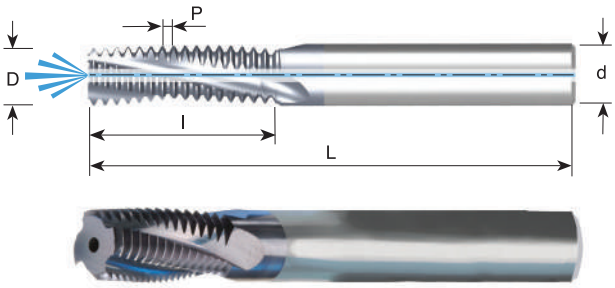

Grade	P	M	K	N	S	H
MT7	●	●	●	○	●	≤47 HRc

Pitch TPI	Standard	Ordering Code	d	D	No. of Flutes	l	L
27	1/8	**MTB 08076 C10 27 NPTF**	8	7.6	3	10.8	64
18	1/4-3/8	**MTB 1010 D16 18 NPTF**	10	10.0	4	16.2	73
14	1/2-3/4	**MTB 16155 D22 14 NPTF**	16	15.5	4	22.7	105
11.5	1-2	**MTB 2020 D29 11.5 NPTF**	20	20.0	4	29.8	105
8	≥ 2 1/2	**MTB 2020 D39 8 NPTF**	20	20.0	4	39.7	105

Order example: MTB 16155 D22 14 NPTF MT7

NPTF With internal coolant through the flutes

Same Tool for Internal and External Thread

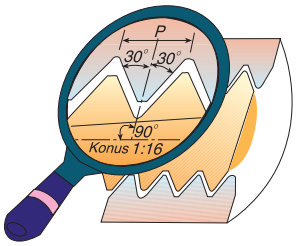

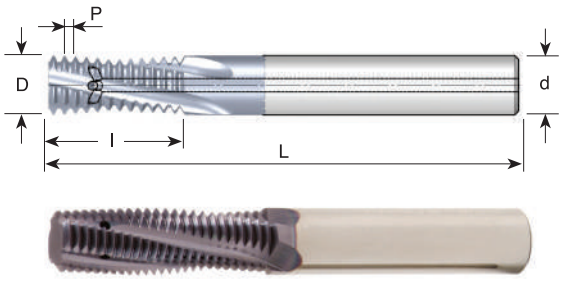

Grade	P	M	K	N	S	H
MT7	●	●	●	○	●	≤47 HRc

Pitch TPI	Standard	Ordering Code	d	D	No. of Flutes	l	L
27	1/8	**MTZ 08076 C10 27 NPTF**	8	7.6	3	10.8	64
18	1/4-3/8	**MTZ 1010 D16 18 NPTF**	10	10.0	4	16.2	73
14	1/2-3/4	**MTZ 16155 D22 14 NPTF**	16	15.5	4	22.7	101

Order example: MTZ 1010 D16 18 NPTF MT7

For conical preparation end mills see page B08-23

● First choice ○ Alternative

Solid Carbide Tapered End Mills

Solid carbide tapered end mills are used for milling preparation of conical threads before the thread milling operation.

Advantages:

* Increases the tool life of mill thread cutters and indexable inserts.
* Equal and uniform load along the cutting edge of the mill thread cutter.
* Shorter machining time during the mill thread operation, due to the tapered preparation.
* Same tool for internal and external preparation.

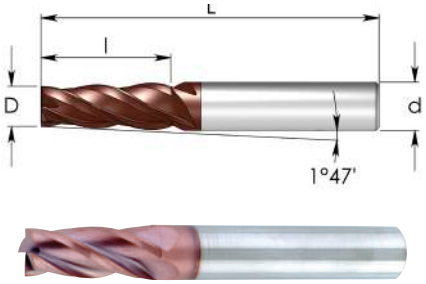

Ordering Code	d	D	l	L	No. of Flutes	Size
SC0652D12	6	5.2	12	58	4	NPT 1/16" - 1/8" NPTF 1/16" - 1/8" BSPT 1/16" - 1/8"
SC1085D24	10	8.5	24	73	4	NPT 1/4" - 1" NPTF 1/4" - 1" BSPT 1/4" - 1"
SC1210D32	12	10	32	84	4	NPT 1/4" - 3" NPTF 1/4" - 3" BSPT 1/4" - 3"

Order example: SC 1085 D24 MT7
Carbide grade: MT7

External Preparation

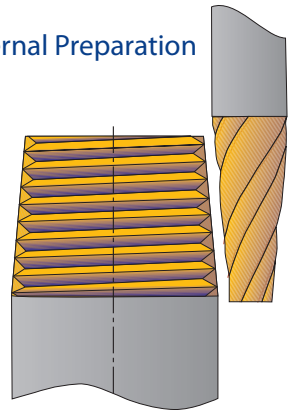

Internal Preparation

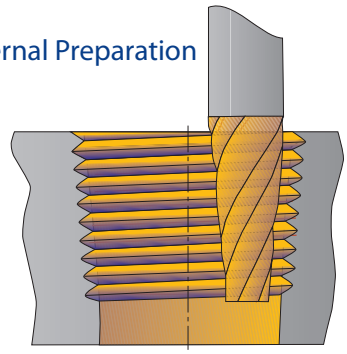

NPS With internal coolant bore

Same Tool for Internal and External Thread - Inch Shank

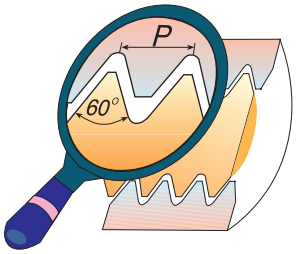

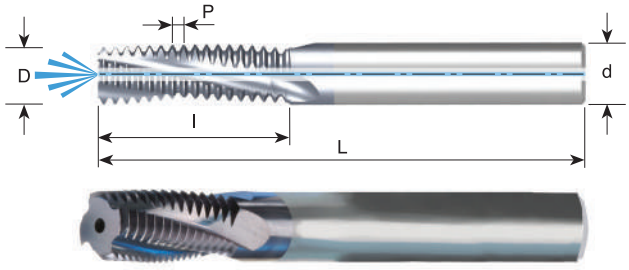

Grade	P	M	K	N	S	H
MT7	●	●	●	○	●	≤47 HRc

Pitch TPI	Standard	Ordering Code	d inch	D	No. of Flutes	l	L
27	1/8	**MTB 0312 C04 27 NPS**	5/16	7.6	3	10.8	63
18	1/4-3/8	**MTB 0375 D06 18 NPS**	3/8	9.5	4	16.2	76
14	1/2-3/4	**MTB 0625 D08 14 NPS**	5/8	15.5	4	22.7	101
11.5	1-2	**MTB 0750 D11 11.5 NPS**	3/4	19.0	4	29.8	101

Order example: MTB 0375 D06 18 NPS MT7

NPSF With internal coolant bore

Same Tool for Internal and External Thread - Inch Shank

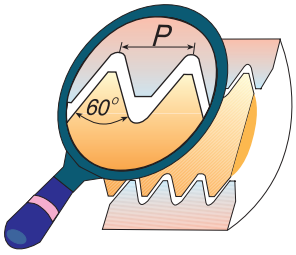

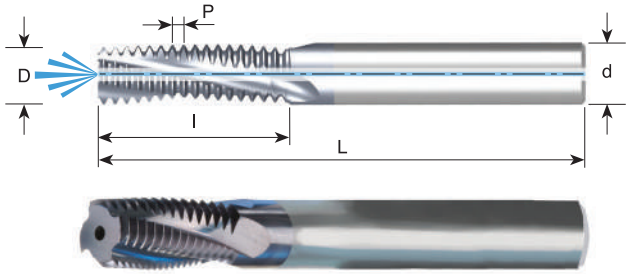

Grade	P	M	K	N	S	H
MT7	●	●	●	○	●	≤47 HRc

Pitch TPI	Standard	Ordering Code	d inch	D	No. of Flutes	l	L
27	1/8	**MTB 0312 C04 27 NPSF**	5/16	7.6	3	10.8	63
18	1/4-3/8	**MTB 0375 D06 18 NPSF**	3/8	9.5	4	16.2	76
14	1/2-3/4	**MTB 0625 D08 14 NPSF**	5/8	15.5	4	22.7	101
11.5	1-2	**MTB 0750 D11 11.5 NPSF**	3/4	19.0	4	29.8	101

Order example: MTB 0312 C04 27 NPSF MT7

● First choice ○ Alternative

MJ With internal coolant bore

Tools for internal thread

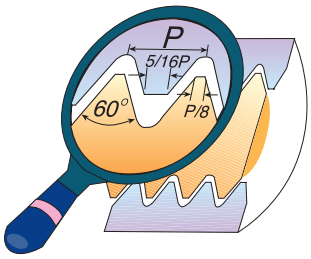

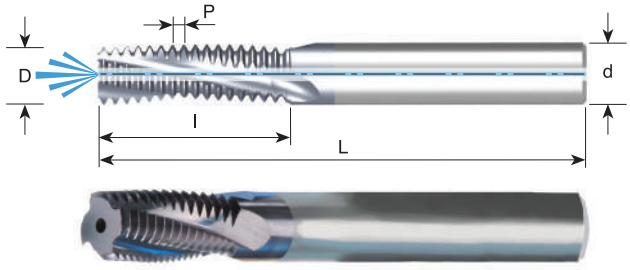

Grade	P	M	K	N	S	H
MT7	●	●	●	○	●	≤47 HRc

Pitch mm	Thread	Ordering Code	d	D	No. of Flutes	l	L
0.7	MJ4	**MTB 06032 C8 0.7 MJ**	6	3.2	3	8.1	58
0.8	MJ5	**MTB 0604 C10 0.8 MJ**	6	4.0	3	10.0	58
1.0	MJ6	**MTB 06048 D12 1.0 MJ**	6	4.8	4	12.5	58
1.25	MJ8	**MTB 08064 D15 1.25 MJ**	8	6.4	4	15.6	64
1.5	MJ10	**MTB 0808 D20 1.5 MJ**	8	8.0	4	20.3	64
1.75	MJ12	**MTB 10095 D23 1.75 MJ**	10	9.5	4	23.6	73

Order example: MTB 06048 D12 1.0 MJ MT7

UNJ With internal coolant bore

Tools for internal thread

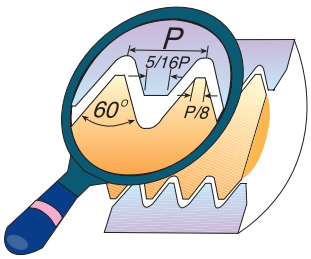

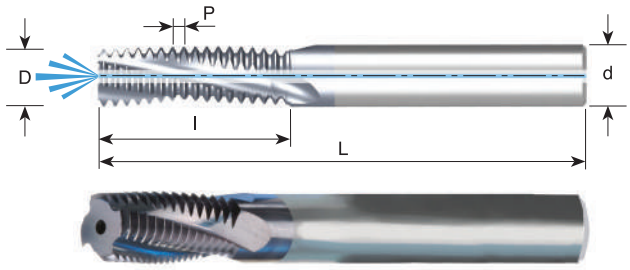

Grade	P	M	K	N	S	H
MT7	●	●	●	○	●	≤47 HRc

Pitch TPI	UNJC	UNJF	Ordering Code	d	D	No. of Flutes	l	L
28		1/4	**MTB 06052 D13 28 UNJ**	6	5.2	4	13.2	58
24		5/16	**MTB 08066 D16 24 UNJ**	8	6.6	4	16.4	64
24		3/8	**MTB 10082 D19 24 UNJ**	10	8.2	4	19.6	73
20	1/4		**MTB 06048 C13 20 UNJ**	6	4.8	3	13.3	58
20		7/16-1/2	**MTB 10092 D22 20 UNJ**	10	9.2	4	22.2	73
18	5/16		**MTB 0606 C16 18 UNJ**	6	6.0	3	16.2	58
16	3/8		**MTB 08074 D19 16 UNJ**	8	7.4	4	19.9	64
14	7/16		**MTB 10085 D22 14 UNJ**	10	8.5	4	22.7	73
13	1/2		**MTB 10098 D26 13 UNJ**	10	9.8	4	26.4	73
12	9/16		**MTB 12116 D28 12 UNJ**	12	11.6	4	28.6	84

Order example: MTB 0606 C16 18 UNJ MT7

● First choice ○ Alternative

PG DIN 40430 - With internal coolant bore

Same Tool for Internal and External Thread

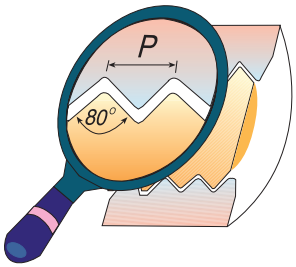

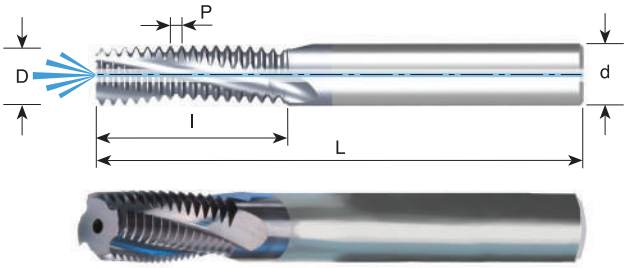

Grade	P	M	K	N	S	H
MT7	●	●	●	○	●	≤47 HRc

Pitch TPI	Standard	Ordering Code	d	D	No. of Flutes	l	L
20	Pg 7	**MTB 1010 D19 20 PG**	10	10.0	4	19.7	73
18	Pg 9, 11, 13.5, 16	**MTB 1212 D20 18 PG**	12	12.0	4	20.5	84
16	Pg 21, 29, 36, 42, 48	**MTB 1212 D23 16 PG**	12	12.0	4	23.0	84

Order example: MTB 1212 D20 18 PG MT7

● First choice ○ Alternative

Mill - Thread Solid Carbide for External Threads

Advantages:

- Excellent surface finish thanks to the spiral flutes
- Short machining time due to multi 3 to 5 flutes

ISO

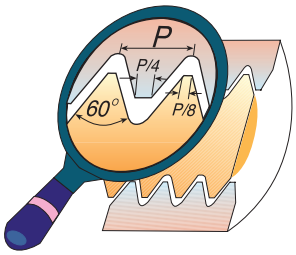

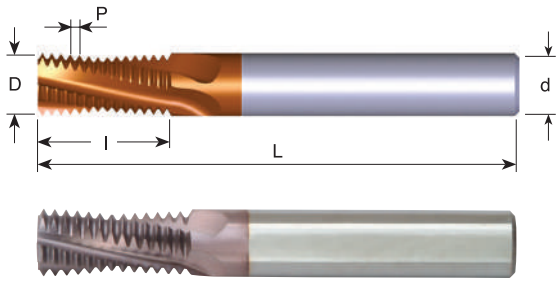

Grade	P	M	K	N	S	H
MT7	●	●	●	○	●	≤47 HRc

Pitch mm	Ordering Code	d	D	No. of Flutes	l	L
1.0	**EMT 1010 D16 1.0 ISO**	10	10.0	4	16.5	73
1.0	**EMT 1212 E20 1.0 ISO**	12	12.0	5	20.5	84
1.25	**EMT 1010 D16 1.25 ISO**	10	10.0	4	16.9	73
1.5	**EMT 1010 D15 1.5 ISO**	10	10.0	4	15.8	73
1.5	**EMT 1212 D20 1.5 ISO**	12	12.0	4	20.3	84
1.75	**EMT 1212 D20 1.75 ISO**	12	12.0	4	20.1	84
2.0	**EMT 1010 C17 2.0 ISO**	10	10.0	3	17.0	73
2.0	**EMT 1212 D21 2.0 ISO**	12	12.0	4	21.0	84

Order example: EMT 1010 D15 1.5 ISO MT7

UN

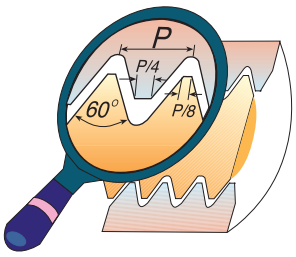

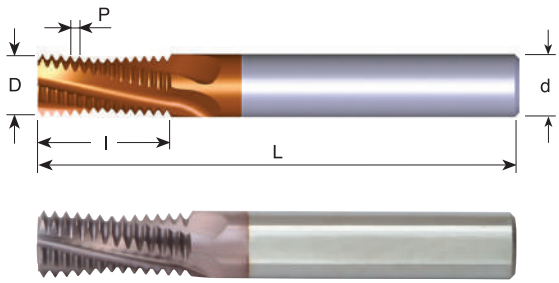

Grade	P	M	K	N	S	H
MT7	●	●	●	○	●	≤47 HRc

Pitch TPI	Ordering Code	d	D	No. of Flutes	l	L
24	**EMT 1010 D16 24 UN**	10	10.0	4	16.4	73
20	**EMT 1212 E21 20 UN**	12	12.0	5	21.0	84
18	**EMT 1212 D20 18 UN**	12	12.0	4	20.5	84
16	**EMT 1212 D21 16 UN**	12	12.0	4	21.4	84
14	**EMT 1212 D20 14 UN**	12	12.0	4	20.9	84
12	**EMT 1212 D20 12 UN**	12	12.0	4	20.1	84

Order example: EMT 1212 D20 18 UN MT7

● First choice ○ Alternative

MJ

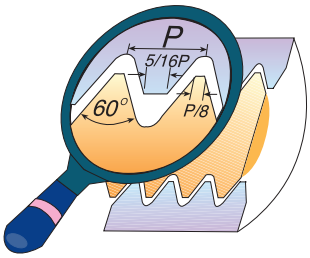

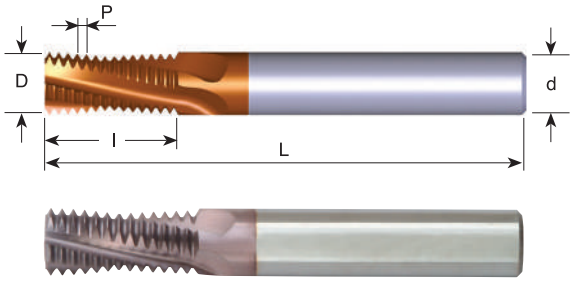

Grade	P	M	K	N	S	H
MT7	●	●	●	○	●	≤47 HRc

Pitch mm	Ordering Code	d	D	No. of Flutes	l	L
1.0	**EMT 1010 D20 1.0 MJ**	10	10.0	4	20.5	72
1.0	**EMT 1212 E24 1.0 MJ**	12	12.0	5	24.5	83
1.25	**EMT 1010 D19 1.25 MJ**	10	10.0	4	19.4	72
1.5	**EMT 1010 D21 1.5 MJ**	10	10.0	4	21.8	72
1.5	**EMT 1212 D26 1.5 MJ**	12	12.0	4	26.3	83
1.75	**EMT 1212 D27 1.75 MJ**	12	12.0	4	27.1	83
2.0	**EMT 1010 C21 2.0 MJ**	10	10.0	3	21.0	72
2.0	**EMT 1212 D27 2.0 MJ**	12	12.0	4	27.0	83

Order example: EMT 1010 C21 2.0 MJ MT7

UNJ UNJC, UNJF, UNJEF, UNJS

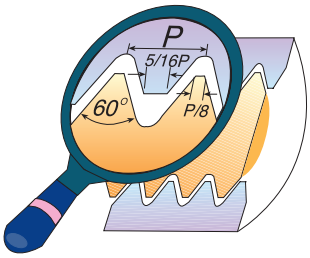

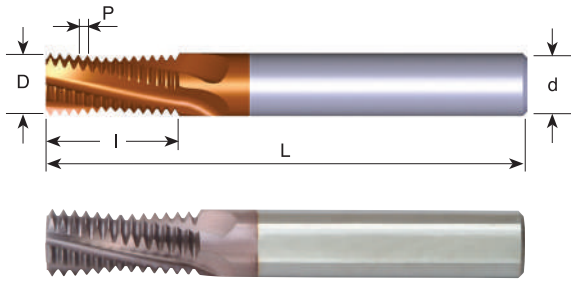

Grade	P	M	K	N	S	H
MT7	●	●	●	○	●	≤47 HRc

Pitch TPI	Ordering Code	d	D	No. of Flutes	l	L
32	**EMT 0606 C13 32 UNJ**	6	6.0	3	13.9	57
28	**EMT 0808 D17 28 UNJ**	8	8.0	4	17.7	63
24	**EMT 1010 D20 24 UNJ**	10	10.0	4	20.6	72
20	**EMT 1212 E27 20 UNJ**	12	12.0	5	27.3	83
18	**EMT 1212 D26 18 UNJ**	12	12.0	4	26.1	83
16	**EMT 1212 D26 16 UNJ**	12	12.0	4	26.2	83
14	**EMT 1212 D26 14 UNJ**	12	12.0	4	26.3	83
12	**EMT 1212 D26 12 UNJ**	12	12.0	4	26.5	83

Order example: EMT 0808 D17 28 UNJ MT7

For cutting data information see page B12-12

● First choice ○ Alternative

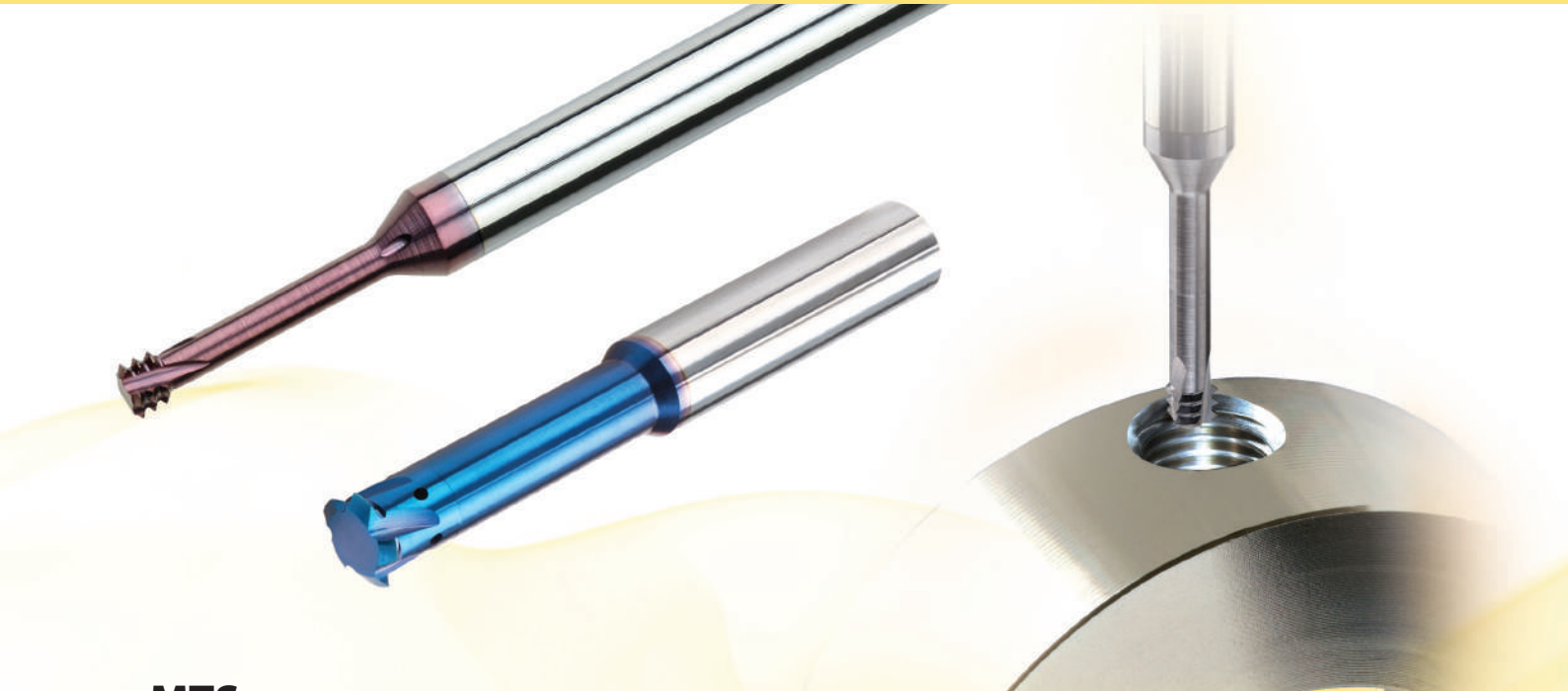

MTS

- Threading from ISO M1 x 0.25 and 0-80UN.
- Working in high cutting speed.
- Short machining time.
- Low cutting forces thanks to the short profile.
- No broken taps.
- Machining of hardened materials up to 45 HRc.

Advantages

- Enables machining in deep holes.
- Same tool can produce a wide range of threads and pitches.
- Same tool can produce both External and Internal threads.
- Coolant through the flutes is very effective for deep holes.
- Spiral flutes allow smooth cutting action.
- Shorter machining time due to multi (3 to 5) flutes.
- Longer tool life due to special triple coating.

MTSB

Solid carbide thread mills with internal coolant bore and increased number of flutes for high performance, shorter cycle time and improved tool life.

MTI - For threading deep parts

FMTI

Thread mills with a large number of flutes that enables to achieve significant shorter machining time, increased productivity and high performance.

Contents: Page:

Product Identification	2
MTS	3-8
ISO	3-4
UN	5-6
G (55°) BSW, BSP	7
MJ	8
UNJ	8
MTS Dental	9
ISO	9
UN	9
MTSB	10-12
ISO	11
UN	12

Contents: Page:

G 55° BSP	12
MTI	13-16
Partial Profile 60°	13
Partial Profile 60° with internal coolant	14
Partial Profile 55°	14
ISO	15
UN	15
Trapez-DIN 103	16
Acme	16
FMTI Multi Flute	17
ISO	17
UN	17

Product Identification

Mini Mill-Thread MTS Ordering Codes

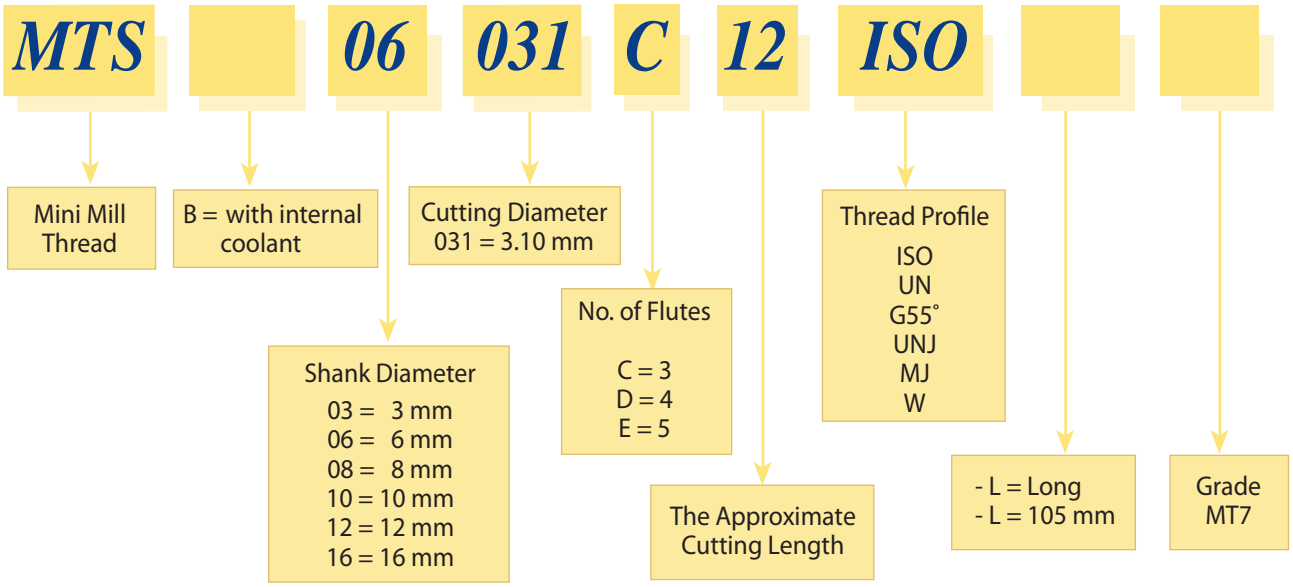

Mini Mill-Thread MTI and FMTI Ordering Codes

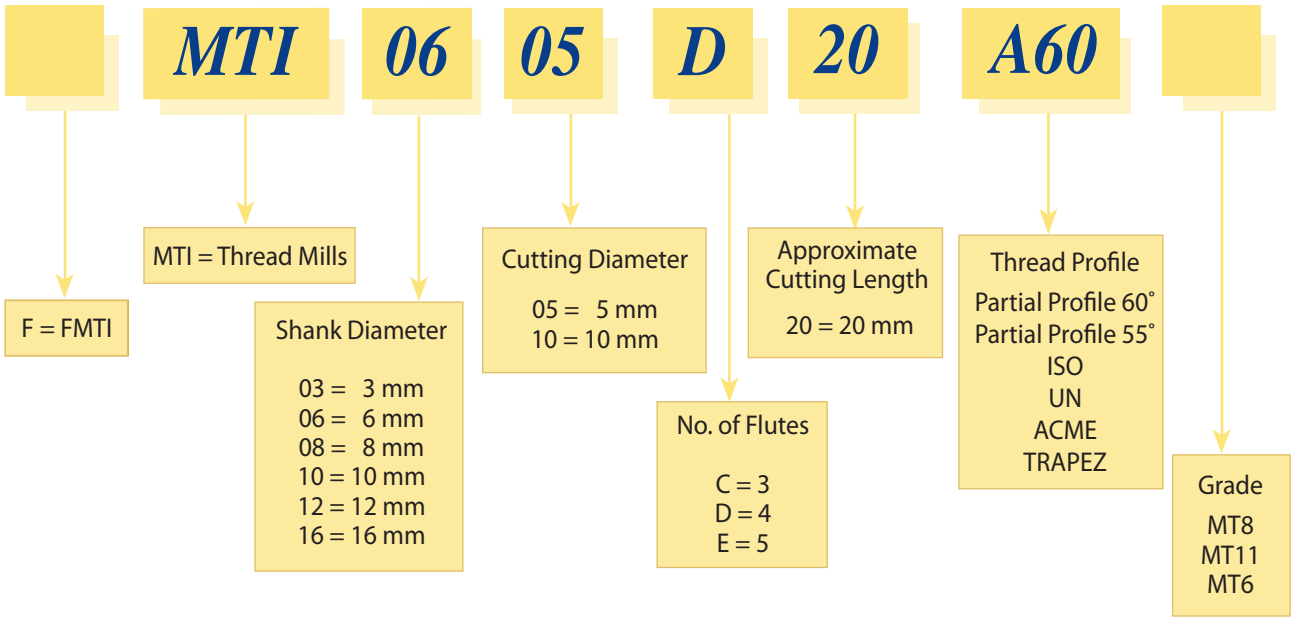

MTS

Demonstration

Carbide grade: MT7

Sub-Micron grade with Titanium Aluminum Nitride multi-layer coating (ISO K10 - K20).
To be run at medium to high cutting speeds. General purpose for all materials.

ISO

Tools for Internal Thread

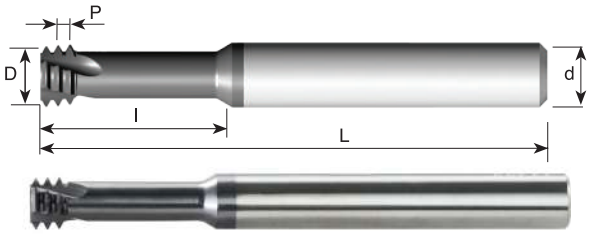

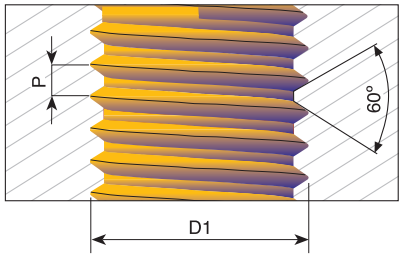

Grade	P	M	K	N	S	H
MT7	●	○	●	●	●	≤45 HRc

Pitch mm	M Coarse	M Fine	Ordering Code	d	D	No. of Flutes	l	L	Thread depth
0.25	M1, M1.1		MTS 03007 C2 0.25 ISO	3	0.72	3	2.5	39	2.5xD1
0.25	M1.2	M1.4	MTS 03009 C3 0.25 ISO	3	0.90	3	3.0	39	2xD1
0.3	M1.4		MTS 03011 C4 0.3 ISO	3	1.05	3	4.0	39	3xD1
0.35	M1.6,M1.8	M2, M2.5	MTS 03012 C5 0.35 ISO	3	1.20	3	4.8	39	3xD1
0.35	M1.6,M1.8	M2, M2.5	MTS 06012 C5 0.35 ISO-L	6	1.20	3	4.8	105	3xD1
0.35		M5, M6	MTS 06045 D14 0.35 ISO	6	4.50	4	14.5	58	3xD1
0.4	M2		MTS 06016 C4 0.4 ISO	6	1.53	3	4.5	58	2xD1
0.4	M2		MTS 06016 C4 0.4 ISO-L	6	1.53	3	4.5	105	2xD1
0.4	M2		MTS 03016 C6 0.4 ISO	3	1.53	3	6.0	39	3xD1
0.4	M2		MTS 03016 C10 0.4 ISO	3	1.53	3	10.4	39	5xD1
0.45	M2.2		MTS 06017 C5 0.45 ISO	6	1.65	3	5.0	58	2xD1
0.45	M2.2		MTS 03017 C7 0.45 ISO	3	1.65	3	7.0	39	3xD1
0.45	M2.5		MTS 0602 C5 0.45 ISO	6	1.95	3	5.5	58	2xD1
0.45	M2.5		MTS 0602 C5 0.45 ISO-L	6	1.95	3	5.5	105	2xD1
0.45	M2.5		MTS 0602 C7 0.45 ISO	6	1.95	3	7.5	58	3xD1
0.45	M2.5		MTS 0602 C8 0.45 ISO-L	6	1.95	3	8.0	105	3xD1
0.45	M2.5		MTS 0302 C10 0.45 ISO	3	1.95	3	10.5	39	4xD1
0.5	M3		MTS 06024 C6 0.5 ISO	6	2.37	3	6.5	58	2xD1
0.5	M3		MTS 06024 C6 0.5 ISO-L	6	2.37	3	6.5	105	2xD1
0.5	M3		MTS 06024 C9 0.5 ISO	6	2.37	3	9.5	58	3xD1
0.5	M3		MTS 06024 C9 0.5 ISO-L	6	2.37	3	9.5	105	3xD1
0.5	M3		MTS 03024 C12 0.5 ISO	3	2.40	3	12.5	39	4xD1
0.5	M3		MTS 03024 C15 0.5 ISO	3	2.40	3	15.5	39	5xD1
0.5		M4, M5	MTS 06034 D8 0.5 ISO	6	3.40	4	8.5	58	2xD1
0.5		M4, M5	MTS 06034 D12 0.5 ISO	6	3.40	4	12.5	58	3xD1
0.5		M6, M7	MTS 06054 D20 0.5 ISO	6	5.35	4	20.0	58	3xD1
0.6	M3.5		MTS 06028 C7 0.6 ISO	6	2.75	3	7.5	58	2xD1
0.6	M3.5		MTS 06028 C10 0.6 ISO	6	2.75	3	10.5	58	3xD1
0.7	M4		MTS 06031 C9 0.7 ISO	6	3.10	3	9.0	58	2xD1
0.7	M4		MTS 06031 C12 0.7 ISO	6	3.10	3	12.5	58	3xD1
0.7	M4		MTS 06031 C12 0.7 ISO-L	6	3.10	3	12.5	105	3xD1
0.7	M4		MTS 06031 C16 0.7 ISO	6	3.10	3	16.7	58	4xD1

● First choice ○ Alternative

ISO
Tools for Internal Thread

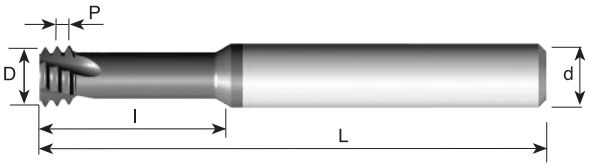

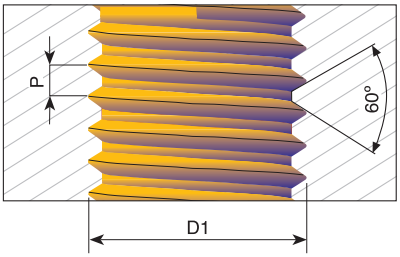

Grade	P	M	K	N	S	H
MT7	●	○	●	●	●	≤45 HRc

Pitch mm	M Coarse	M Fine	Ordering Code	d	D	No. of Flutes	l	L	Thread depth
0.75	M4.5	M5	MTS 06034 C9 0.75 ISO	6	3.40	3	9.8	58	2xD1
0.75		M6	MTS 06049 D12 0.75 ISO	6	4.90	4	12.8	58	2xD1
0.75		M10, M12	MTS 0808 D25 0.75 ISO	8	8.00	4	25.0	64	2.5xD1
0.8	M5		MTS 06038 C12 0.8 ISO	6	3.80	3	12.5	58	2xD1
0.8	M5		MTS 06038 C16 0.8 ISO	6	3.80	3	16.0	58	3xD1
0.8	M5		MTS 06038 C16 0.8 ISO-L	6	3.80	3	16.0	105	3xD1
0.8	M5		MTS 0604 C20 0.8 ISO	6	4.00	3	20.8	58	4xD1
1.0	M6	M8	MTS 06047 C14 1.0 ISO	6	4.65	3	14.0	58	2xD1
1.0	M6	M8	MTS 06047 C20 1.0 ISO	6	4.65	3	20.0	58	3xD1
1.0	M6	M8	MTS 06047 C20 1.0 ISO-L	6	4.65	3	20.0	105	3xD1
1.0	M6	M8	MTS 06048 C25 1.0 ISO	6	4.80	3	25.0	58	4xD1
1.0		M10, M12	MTS 0808 D31 1.0 ISO	8	8.00	4	31.0	64	3xD1
1.25	M8	M10, M12	MTS 0606 C18 1.25 ISO	6	6.00	3	18.0	58	2xD1
1.25	M8	M10, M12	MTS 0606 C24 1.25 ISO	6	6.00	3	24.0	58	3xD1
1.25	M8	M10, M12	MTS 0606 C24 1.25 ISO-L	6	6.00	3	24.0	105	3xD1
1.25	M8	M10, M12	MTS 08064 C33 1.25 ISO	8	6.40	3	33.5	64	4xD1
1.5	M10	M14, M16	MTS 08078 C23 1.5 ISO	8	7.80	3	23.0	64	2xD1
1.5	M10	M14, M16	MTS 08078 C31 1.5 ISO	8	7.80	3	31.5	64	3xD1
1.5	M10	M14, M16	MTS 08078 C31 1.5 ISO-L	8	7.80	3	31.5	105	3xD1
1.5	M10	M14, M16	MTS 0808 C41 1.5 ISO	8	8.00	3	41.5	76	4xD1
1.75	M12		MTS 1009 C26 1.75 ISO	10	9.00	3	26.0	73	2Xd1
1.75	M12		MTS 1009 C37 1.75 ISO	10	9.00	3	37.8	73	3xD1
2.0	M14	M17	MTS 1010 D30 2.0 ISO	10	10.00	4	30.0	73	2xD1
2.0	M16	M18, M20	MTS 12118 D35 2.0 ISO	12	11.80	4	35.0	84	2xD1
2.0	M16	M18, M20	MTS 12118 D50 2.0 ISO	12	11.80	4	50.0	105	3xD1
2.5	M20		MTS 1615 E43 2.5 ISO	16	15.00	5	43.0	105	2xD1

Order example: MTS 06047 C14 1.0 ISO MT7

● First choice ○ Alternative

UN

Tools for Internal Thread

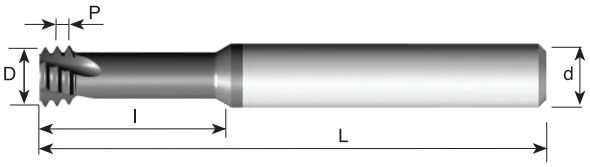

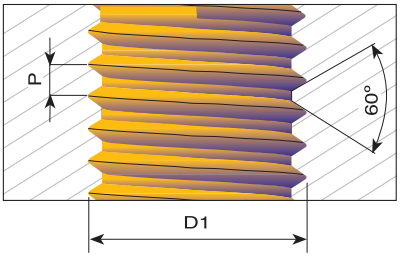

Grade	P	M	K	N	S	H
MT7	●	○	●	●	●	≤45 HRc

Pitch TPI	UNC	UNF	Ordering Code	d	D	No. of Flutes	l	L	Thread depth
80		0	MTS 06012 C4 80 UN	6	1.15	3	4.0	58	3XD1
80		0	MTS 03012 C8 80 UN	3	1.15	3	8.0	39	5XD1
72		1	MTS 06014 C3 72 UN	6	1.45	3	3.7	58	2XD1
72		1	MTS 03015 C6 72 UN	3	1.45	3	6.0	39	3xD1
64	1	2	MTS 06014 C3 64 UN	6	1.40	3	3.8	58	2xD1
56	2	3	MTS 03016 C4 56 UN	3	1.65	3	4.4	39	2xD1
56	2	3	MTS 06016 C4 56 UN	6	1.65	3	4.4	58	2xD1
56	2	3	MTS 03016 C6 56 UN	3	1.65	3	6.6	39	3xD1
56	2	3	MTS 06016 C6 56 UN	6	1.65	3	6.6	58	3xD1
56	2	3	MTS 06016 C6 56 UN-L	6	1.65	3	6.6	105	3xD1
56	2	3	MTS 03016 C9 56 UN	3	1.65	3	9.2	39	4xD1
56	2	3	MTS 03016 C11 56 UN	3	1.65	3	11.4	39	5xD1
48	3	4	MTS 06019 C5 48 UN	6	1.90	3	5.2	58	2xD1
40	4		MTS 06021 C6 40 UN	6	2.10	3	6.3	58	2xD1
40	4		MTS 06021 C6 40 UN-L	6	2.10	3	6.3	105	2xD1
40	4		MTS 03021 C8 40 UN	3	2.10	3	8.0	39	3xD1
40	4		MTS 06021 C8 40 UN	6	2.10	3	8.0	58	3xD1
40	4		MTS 06021 C8 40 UN-L	6	2.10	3	8.0	105	3xD1
40	4		MTS 03021 C12 40 UN	3	2.10	3	12.0	39	4xD1
40	5	6	MTS 06024 C7 40 UN	6	2.45	3	7.0	58	2xD1
40	5	6	MTS 06024 C9 40 UN	6	2.45	3	9.6	58	3xD1
36		8	MTS 06033 C9 36 UN	6	3.30	3	9.0	58	2xD1
32	6		MTS 06025 C7 32 UN	6	2.55	3	7.1	58	2xD1
32	6		MTS 06025 C7 32 UN-L	6	2.55	3	7.1	105	2xD1
32	6		MTS 03025 C10 32 UN	3	2.55	3	10.5	39	3xD1
32	6		MTS 06025 C10 32 UN	6	2.55	3	10.5	58	3xD1
32	6		MTS 06025 C10 32 UN-L	6	2.55	3	10.5	105	3xD1
32	6		MTS 03025 C14 32 UN	3	2.55	3	14.8	39	4xD1
32	8		MTS 06032 C9 32 UN	6	3.20	3	9.5	58	2xD1
32	8		MTS 06032 C9 32 UN-L	6	3.20	3	9.5	105	2xD1
32	8		MTS 06032 C12 32 UN	6	3.20	3	12.5	58	3xD1
32	8		MTS 06032 C12 32 UN-L	6	3.20	3	12.5	105	3xD1
32	8		MTS 06032 C17 32 UN	6	3.20	3	17.5	58	4xD1
32		10	MTS 06037 C10 32 UN	6	3.70	3	10.5	58	2xD1
32		10	MTS 06037 C15 32 UN	6	3.70	3	15.0	58	3xD1
32		10	MTS 06037 C15 32 UN-L	6	3.70	3	15.0	105	3xD1
32		10	MTS 06037 C20 32 UN	6	3.70	3	20.0	58	4xD1
28		12	MTS 06042 C11 28 UN	6	4.20	3	11.0	58	2xD1

Order example: MTS 06021 C6 40 UN MT7

● First choice ○ Alternative

UN

Tools for Internal Thread

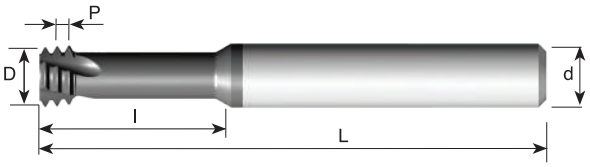

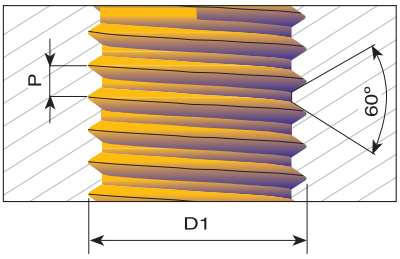

Grade	P	M	K	N	S	H
MT7	●	○	●	●	●	≤45 HRc

Pitch TPI	UNC	UNF	Ordering Code	d	D	No. of Flutes	l	L	Thread depth
28		1/4	**MTS 0605 C14 28 UN**	6	5.00	3	14.5	58	2xD1
28		1/4	**MTS 0605 C19 28 UN**	6	5.00	3	19.0	58	3xD1
28		1/4	**MTS 0605 C19 28 UN-L**	6	5.00	3	19.0	105	3xD1
24	10,12		**MTS 06035 C10 24 UN**	6	3.50	3	10.6	58	2xD1
24	10,12		**MTS 06035 C15 24 UN**	6	3.50	3	15.5	58	3xD1
24	10,12		**MTS 06035 C15 24 UN-L**	6	3.50	3	15.5	105	3xD1
24		5/16, 3/8	**MTS 08066 C17 24 UN**	8	6.60	3	17.0	64	2xD1
24		5/16, 3/8	**MTS 08066 C24 24 UN**	8	6.60	3	24.0	64	3xD1
20	1/4		**MTS 06047 C14 20 UN**	6	4.75	3	14.0	58	2xD1
20	1/4		**MTS 06047 C14 20 UN-L**	6	4.75	3	14.0	105	2xD1
20	1/4		**MTS 06047 C19 20 UN**	6	4.75	3	19.0	58	3xD1
20	1/4		**MTS 06047 C19 20 UN-L**	6	4.75	3	19.0	105	3xD1
20		7/16	**MTS 0808 C25 20 UN**	8	8.00	3	25.0	64	2xD1
20		7/16	**MTS 0808 C34 20 UN**	8	8.00	3	34.6	64	3xD1
18	5/16		**MTS 0606 C17 18 UN**	6	6.00	3	17.0	58	2xD1
18	5/16		**MTS 0606 C23 18 UN**	6	6.00	3	23.0	58	3xD1
18		5/8	**MTS 1212 D35 18 UN**	12	12.00	4	35.0	84	2xD1
18		5/8	**MTS 1212 D49 18 UN**	12	12.00	4	49.0	105	3xD1
16	3/8		**MTS 08067 C22 16 UN**	8	6.70	3	22.0	64	2xD1
16	3/8		**MTS 08067 C30 16 UN**	8	6.70	3	30.2	64	3xD1
14	7/16		**MTS 08077 C25 14 UN**	8	7.70	3	25.0	64	2xD1
14	7/16		**MTS 08077 C35 14 UN**	8	7.70	3	35.2	64	3xD1
13	1/2		**MTS 10092 C27 13 UN**	10	9.20	3	27.5	73	2xD1
13	1/2		**MTS 10092 C40 13 UN**	10	9.20	3	40.1	73	3xD1
12	9/16		**MTS 12105 C31 12 UN**	12	10.50	3	31.5	84	2xD1
12	9/16		**MTS 12105 C45 12 UN**	12	10.50	3	45.0	105	3xD1
11	5/8		**MTS 12114 C34 11 UN**	12	11.40	3	34.5	84	2xD1
11	5/8		**MTS 12114 C50 11 UN**	12	11.40	3	50.0	105	3xD1
10	3/4		**MTS 16144 D41 10 UN**	16	14.40	4	41.5	105	2xD1
10	3/4		**MTS 16144 D59 10 UN**	16	14.40	4	59.7	105	3xD1

Order example: MTS 06035 C10 24 UN MT7

● First choice ○ Alternative

G (55°) BSW, BSP

Same Tool for Internal and External Thread

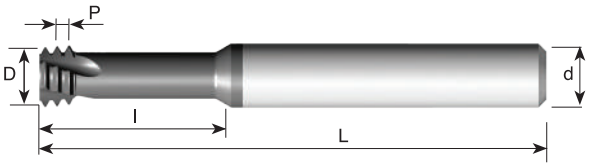

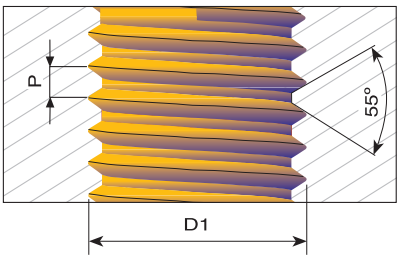

Grade	P	M	K	N	S	H
MT7	●	○	●	●	●	≤45 HRc

Pitch TPI	Standard	Ordering Code	d	D	No. of Flutes	l	L	Thread depth
28	G 1/8	**MTS 08078 C19 28 W**	8	7.8	3	19.5	64	2xD1
19	G 1/4 - 3/8	**MTS 1010 D30 19 W**	10	10.0	4	30.0	73	2xD1
14	G 1/2 - 7/8	**MTS 1212 D37 14 W**	12	12.0	4	37.0	84	2xD1
11	G ≥ 1	**MTS 1616 D44 11 W**	16	16.0	4	44.0	105	2xD1

Order example: MTS 1212 D37 14 W MT7

● First choice ○ Alternative

Carbide grade: MT8

Sub Micron grade with advanced PVD triple coating (ISO K10-K20).
Extremely high heat resistance and smooth cutting operation for high performance in normal and general machining conditions on all materials.

MJ With internal coolant through the flutes

Tools for Internal Thread

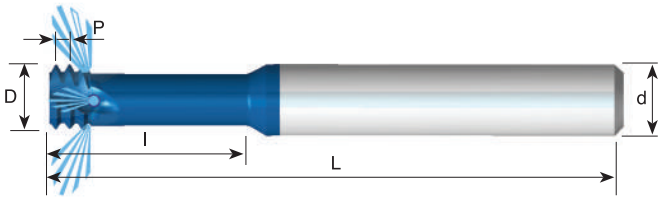

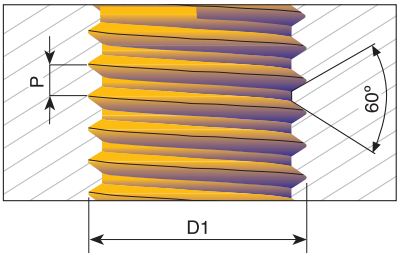

Grade	P	M	K	N	S	H
MT8	●	●	●	○	●	≤52 HRc

Pitch TPI	D1	Ordering Code	d	D	No. of Flutes	l	L	Thread depth
0.5	MJ3	*MTS 03024 C7 0.5 MJ	3	2.40	3	7.5	38	2.5xD1
0.7	MJ4	*MTS 06032 C10 0.7 MJ	6	3.20	3	10.0	58	2.5xD1
0.8	MJ5	*MTS 06039 C12 0.8 MJ	6	3.90	3	12.5	58	2.5xD1
1.0	MJ6	*MTS 06048 C15 1.0 MJ	6	4.80	3	15.0	58	2.5xD1
1.25	MJ8	MTS 08061 C20 1.25 MJ	8	6.10	3	20.0	64	2.5xD1
1.5	MJ10	MTS 0808 C25 1.5 MJ	8	8.00	3	25.5	64	2.5xD1
1.75	MJ12	MTS 10092 C30 1.75 MJ	10	9.20	3	30.0	73	2.5xD1
2.0	MJ14, MJ16	MTS 1010 C35 2.0 MJ	10	10.00	3	35.0	73	2.5xD1

* Cutters without coolant

Order example: MTS 06048 C15 1.0 MJ MT8

UNJ With internal coolant through the flutes

Tools for Internal Thread

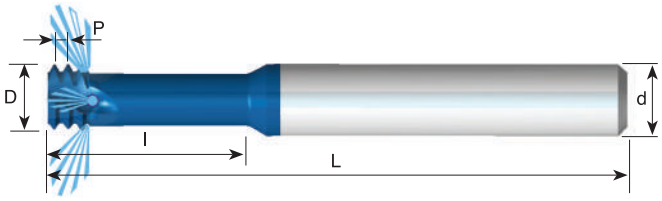

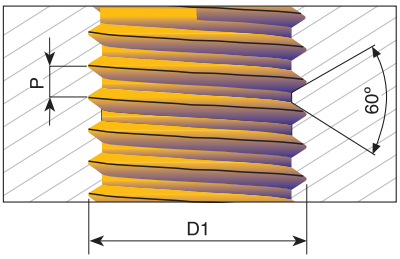

Grade	P	M	K	N	S	H
MT8	●	●	●	○	●	≤52 HRc

Pitch TPI	UNJC	UNJF	Ordering Code	d	D	No. of Flutes	l	L	Thread depth
32	6		*MTS 06025 C7 32 UNJ	6	2.55	3	7.1	58	2.5xD1
32	8	10	*MTS 06033 C10 32 UNJ	6	3.30	3	10.5	58	2.5xD1
28		1/4	MTS 08051 C16 28 UNJ	8	5.10	3	16.0	64	2.5xD1
24		5/16, 3/8	MTS 08067 C20 24 UNJ	8	6.70	3	20.0	64	2.5xD1
20	1/4		*MTS 06049 C16 20 UNJ	6	4.90	3	16.0	58	2.5xD1
20		7/16	MTS 0808 C28 20 UNJ	8	8.00	3	28.0	64	2.5xD1
18	5/16	9/16	MTS 08061 C20 18 UNJ	8	6.15	3	20.0	64	2.5xD1
16	3/8		MTS 08069 C24 16 UNJ	8	6.90	3	24.0	64	2.5xD1
14	7/16		MTS 08079 C25 14 UNJ	8	7.90	3	25.0	64	2.5xD1
13	1/2		MTS 10094 C27 13 UNJ	10	9.40	3	27.5	73	2.5xD1

* Cutters without coolant

Order example: MTS 06049 C16 20 UNJ MT8

● First choice ○ Alternative

MTS Dental

Thread Mills for the Dental Implants Industry

Specially designed geometry with long overhang providing improved machining and very high thread accuracy along with extended tool life.

Carbide grade: MT11 Ultra-fine Sub-micron grade with advanced PVD triple blue coating.



ISO

Tools for Internal Thread

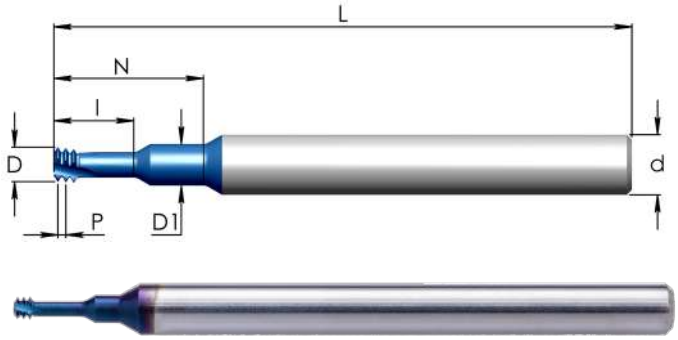

Grade	P	M	K	N	S	H
MT11	●	●	●	○	●	≤62 HRc

Pitch mm	M Coarse	Ordering Code	d	D	D1	No. of Flutes	l	N	L
0.25	M1.2	**MTS 03009 C3 0.25 ISO-N4**	3	0.90	1.25	3	3.0	4.7	39
0.3	M1.4	**MTS 03011 C4 0.3 ISO-N7**	3	1.05	1.40	3	4.0	7.2	39
0.35	M1.6,M1.8	**MTS 03012 C5 0.35 ISO-N8**	3	1.20	1.40	3	4.8	8.6	39
0.4	M2	**MTS 03016 C4 0.4 ISO-N8**	3	1.53	1.90	3	4.6	8.6	39

Order example: MTS 03011 C4 0.3 ISO-N7 MT11

UN

Tools for Internal Thread

Grade	P	M	K	N	S	H
MT11	●	●	●	○	●	≤62 HRc

Pitch TPI	UNF	Ordering Code	d	D	D1	No. of Flutes	l	N	L
80	0	**MTS 03012 C3 80 UN-N5**	3	1.15	1.35	3	3.1	5.6	39
72	1	**MTS 03015 C4 72 UN-N5**	3	1.45	1.65	3	3.7	5.9	39
72	1	**MTS 03015 C4 72 UN-N10**	3	1.45	1.65	3	3.7	10.0	39
72	1	**MTS 03015 C4 72 UN-N15**	3	1.45	1.65	3	3.7	15.0	39

Order example: MTS 03012 C3 80 UN-N5 MT11

● First choice ○ Alternative

MTSB type



An innovative solid carbide thread mill with internal coolant bore and increased number of flutes.
The coolant bore provides high coolant pressure through the tool into the application pre-hole and washes the chips away during the threading cycle.
The coolant liquid also cools the tool cutting edge very efficiently.

Demonstration

Excellent solution for:

- Small and deep threads.
- Thread milling operations on horizontal machining centers, where chips are concentrated at the bottom of the thread and external coolant can't wash the chips away.
- Complicated applications where external coolant is inefficient or can't reach the machined area.
- Case where the tool collet is close to the application pre-hole and blocks the external coolant.

Can also be used in any other thread milling operation (blind or through hole) that requires improved performance with high thread quality.

Features:

- Increased number of flutes for high performance, shorter cycle time and improved tool life.
- Working at high machining parameters (increasing productivity).
- Advanced PVD triple coating.
- Threads size: M1.2 up to M8
  0-80 up to 12-24UNC

Carbide grade: MT7

Our MT7 sub-micron grade with it's advanced PVD triple coating provides extremely high heat resistance along with smooth cutting action, delivering high performance under normal machining conditions.

MTSB

With Internal Coolant and Multi Flute

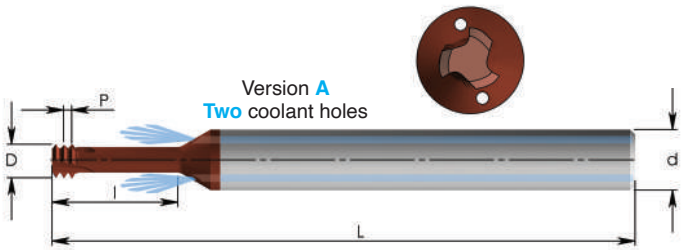

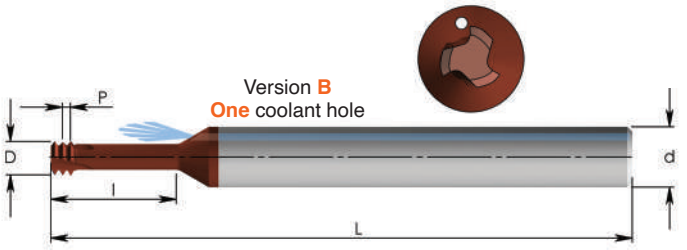

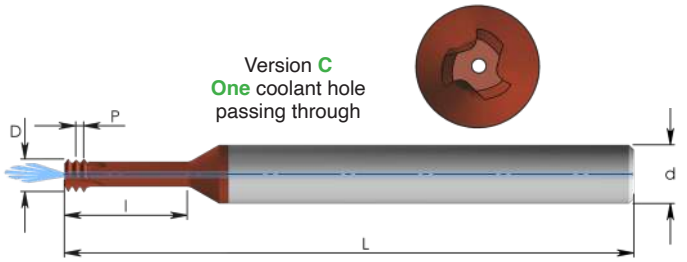



ISO

Tools for Internal Thread

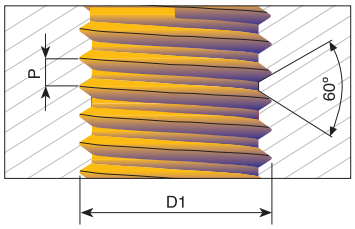

Grade	P	M	K	N	S	H
MT7	●	●	●	●	●	≤45 HRc

Pitch mm	M Coarse	M Fine	Ordering Code	d	D	No. of Flutes	l	L	Thread Depth	Version
0.25	M1.2	M1.4	**MTSB 06009 C2 0.25 ISO**	6	0.90	3	2.7	58	2xD1	A
0.3	M1.4		**MTSB 06011 C4 0.3 ISO**	6	1.05	3	4.5	58	3xD1	A
0.35	M1.6	M2	**MTSB 06012 C5 0.35 ISO**	6	1.20	3	5.2	58	3xD1	A
0.4	M2		**MTSB 06016 C4 0.4 ISO**	6	1.55	3	4.4	58	2xD1	A
0.4	M2		**MTSB 06016 C6 0.4 ISO**	6	1.55	3	6.4	58	3xD1	A
0.45	M2.5		**MTSB 0602 D5 0.45 ISO**	6	1.95	4	5.5	58	2xD1	A
0.45	M2.5		**MTSB 0602 D7 0.45 ISO**	6	1.95	4	7.9	58	3xD1	A
0.5	M3		**MTSB 06024 D6 0.5 ISO**	6	2.40	4	6.5	58	2xD1	A
0.5	M3		**MTSB 06024 D9 0.5 ISO**	6	2.40	4	9.5	58	3xD1	A
0.6	M3.5		**MTSB 06028 D7 0.6 ISO**	6	2.80	4	7.6	58	2xD1	A
0.7	M4		**MTSB 06032 D8 0.7 ISO**	6	3.20	4	8.7	58	2xD1	B
0.7	M4		**MTSB 06032 D12 0.7 ISO**	6	3.20	4	12.7	58	3xD1	B
0.8	M5		**MTSB 06038 D10 0.8 ISO**	6	3.80	4	10.8	58	2xD1	B
0.8	M5		**MTSB 06038 D15 0.8 ISO**	6	3.80	4	15.8	58	3xD1	B
1.0	M6	M8	**MTSB 08048 D13 1.0 ISO**	8	4.80	4	13.0	64	2xD1	B
1.0	M6	M8	**MTSB 08048 D19 1.0 ISO**	8	4.80	4	19.0	64	3xD1	B
1.25	M8	M10	**MTSB 0606 D25 1.25 ISO**	10	6.00	4	25.3	58	3xD1	C
1.5	M10		**MTSB 0808 E31 1.5 ISO**	8	8.00	5	31.5	64	3xD1	C
1.75	M12		**MTSB 10095 E37 1.75 ISO**	10	9.50	5	37.8	73	3xD1	C
2.0	M16	M17	**MTSB 1212 E50 2.0 ISO**	12	12.00	5	50.0	105	3xD1	C

Order example: MTSB 1212 E50 2.0 ISO MT7

● First choice ○ Alternative

UN

Tools for Internal Thread

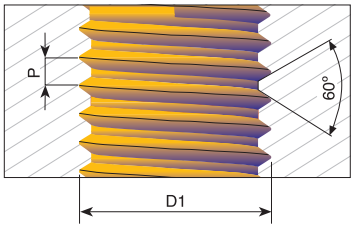

Grade	P	M	K	N	S	H
MT7	●	●	●	●	●	≤45 HRc

Pitch TPI	UNC	UNF	Ordering Code	d	D	No. of Flutes	l	L	Thread Depth	Version
80		0	**MTSB 06012 C4 80 UN**	6	1.15	3	4.9	58	3XD1	A
72		1	**MTSB 06014 C5 72 UN**	6	1.45	3	5.9	58	3xD1	A
56	2	3	**MTSB 06016 C4 56 UN**	6	1.65	3	4.8	58	2xD1	A
56	2	3	**MTSB 06016 C7 56 UN**	6	1.65	3	7.0	58	3xD1	A
48	3	4	**MTSB 06019 D5 48 UN**	6	1.90	4	5.6	58	2xD1	A
40	4		**MTSB 06021 D6 40 UN**	6	2.10	4	6.3	58	2xD1	A
40	4		**MTSB 06021 D9 40 UN**	6	2.10	4	9.2	58	3xD1	A
40	4		**MTSB 06021 D12 40 UN**	6	2.10	4	12.0	58	4xD1	A
40	5	6	**MTSB 06024 D7 40 UN**	6	2.45	4	7.0	58	2xD1	A
32	6		**MTSB 06025 D7 32 UN**	6	2.55	4	7.8	58	2xD1	A
32	6		**MTSB 06025 D11 32 UN**	6	2.55	4	11.3	58	3xD1	A
32	8		**MTSB 06032 D9 32 UN**	6	3.20	4	9.1	58	2xD1	B
32	8		**MTSB 06032 D13 32 UN**	6	3.20	4	13.3	58	3xD1	B
32		10	**MTSB 06037 D10 32 UN**	6	3.70	4	10.5	58	2xD1	B
32		10	**MTSB 06037 D15 32 UN**	6	3.70	4	15.3	58	3xD1	B
28		1/4	**MTSB 06052 D20 28 UN**	6	5.20	4	20.0	58	3xD1	C
24	10,12		**MTSB 06035 D10 24 UN**	6	3.50	4	10.7	58	2xD1	B
24	10,12		**MTSB 06035 D15 24 UN**	6	3.50	4	15.5	58	3xD1	B
24		5/16, 3/8	**MTSB 08066 D24 24 UN**	8	6.60	4	24.9	64	3xD1	C
20		7/16,1/2	**MTSB 10092 E34 20 UN**	10	9.20	5	34.6	73	3xD1	C

Order example: MTSB 06032 D13 32 UN MT7

G 55° BSP

Tools for Internal and External Thread

Grade	P	M	K	N	S	H
MT7	●	●	●	●	●	≤45 HRc

Pitch TPI	Standard	Ordering Code	d	D	No. of Flutes	l	L	Thread depth	Version
28	G1/8	**MTSB 0808 E20 28W**	8	8.00	5	20.4	64	2xD1	C
19	G1/4-3/8	**MTSB 1010 E27 19W**	10	10.00	5	27.7	73	2xD1	C
14	G1/2-7/8	**MTSB 1212 E43 14W**	12	12.00	5	43.7	84	2xD1	C

● First choice ○ Alternative

MTI
For Threading Deep Parts



Demonstration

Low cutting forces thanks to the short profile

Carbide grade: **MT11** Ultra-fine Sub-Micron grade with advanced PVD triple blue coating.
MT8 Sub-Micron grade with advanced PVD triple coating (ISO K10-K20).
Extremely high heat resistance and smooth cutting operation for high performance in normal and general machining conditions on all materials.

MTI
Partial Profile 60°
Same Tool for Internal and External Thread

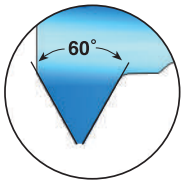

Detail A

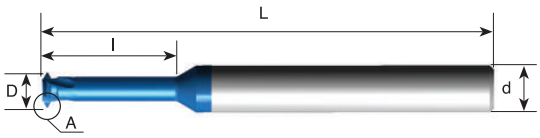

Grade	P	M	K	N	S	H
MT11	●	●	●	○	●	≤62 HRc

Pitch mm	Pitch TPI	M Coarse	M Fine	UN, UNC, UNS UNF, UNEF	Ordering Code	d mm	D	No. of Flutes	l	L
0.25-0.35	100-72	M1.6 x 0.35	M1.6 x 0.25 M1.8 x 0.25 M2 x 0.25	0-80 UNF	**MTI 03012 C3 A60**	3	1.15	3	3.1	39
0.35-0.45	72-56	M2 x 0.4 M2.2 x 0.45	M2 x 0.35 M2.2 x 0.35	1-64 UNC, 1-72 UNF, 2-56 UNC, 2-64 UNF	**MTI 03014 C4 A60**	3	1.40	3	3.7	39
0.35-0.5	72-48		M4.5 x 0.35 M5 x 0.35 M5.5 x 0.35 M6.0 x 0.35 M5 x 0.5 M6 x 0.5	10-56 UNS, 10-48 UNS, 12-56 UNS, 12-48 UNS	**MTI 0604 C15 A60**	6	4.00	3	15.0	58
0.35-0.6	72-40	M2.5 x 0.45	M2.5 x 0.35 M3 x 0.35	3-48 UNC, 3-56 UNF, 4-40 UNC, 4-48 UNF	**MTI 03019 C5 A60**	3	1.90	3	5.2	39
0.5-0.8	48-32	M3 x 0.5 M3.5 x 0.6	M3.5 x 0.5	5-40 UNC, 5-44 UNF, 6-32 UNC, 6-40 UNF	**MTI 03024 C7 A60**	3	2.45	3	7.0	39
0.5-1.0	48-24	M4 x 0.7 M4.5 x 0.75	M4 x 0.5	8-32 UNC, 8-36 UNF, 10-24 UNC, 10-28 UNS, 10-32 UNF	**MTI 06032 C9 A60**	6	3.20	3	9.5	58
0.5-1.0	48-24	M5 x 0.8 M6 x 1.0	M5 x 0.5 M5.5 x 0.5 M5 x 0.75	10-36 UNS, 10-40 UNS, 10-48 UNS, 12-24 UNC, 12-28 UNF	**MTI 0604 C12 A60**	6	4.00	3	12.5	58

Order example: MTI 03024 C7 A60 MT11

● First choice ○ Alternative

Partial Profile 60°

With internal coolant through the flutes

Same Tool for Internal and External Thread

For threading deep parts

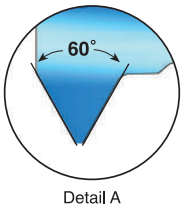

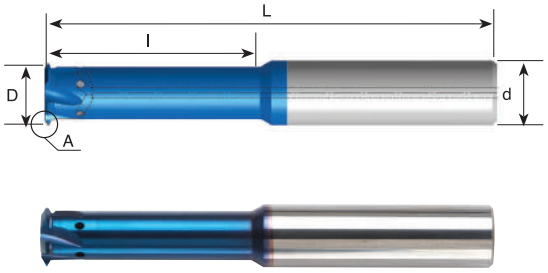

Grade	P	M	K	N	S	H
MT8	●	●	●	○	●	≤52 HRc

Pitch mm	Pitch TPI	Thread Dia. (mm)	Ordering Code	d	D	No. of Flutes	l	L
Int. 0.5 - 0.8 Ex. 0.4 - 0.8	56-28 64-32	ø≥ 6	**MTI 0605 D20 A60**	6	5.0	4	20	58
		ø≥ 9	**MTI 0808 D28 A60**	8	8.0	4	28	64
		ø≥13	**MTI 1212 E38 A60**	12	12.0	5	38	84
Int. 1.0 - 1.75 Ex. 0.8 - 1.5	28-14 32-16	ø≥10	**MTI 0808 D30 A60**	8	8.0	4	30	64
		ø≥12	**MTI 1010 D35 A60**	10	10.0	4	35	73
		ø≥14	**MTI 1212 E39 A60**	12	12.0	5	39	84
Int. 2.0 - 3.0 Ex. 1.75-2.5	13- 8 15-10	ø≥16	**MTI 1212 E40 A60**	12	12.0	5	40	84
		ø≥18	**MTI 1614 E45 A60**	16	14.0	5	45	101
		ø≥20	**MTI 1616 E50 A60**	16	16.0	5	50	101

Order example: MTI 0808 D28 A60 MT8

Partial Profile 55°

Same Tool for Internal and External Thread

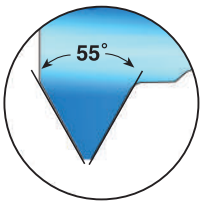

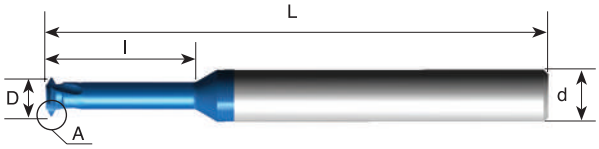

Grade	P	M	K	N	S	H
MT11	●	●	●	○	●	≤62 HRc

Pitch TPI	Ordering Code	d	D	No. of Flutes	l	L
40-32	**MTI 03023 C7 A55**	3	2.25	3	7.0	39
28-20	**MTI 06044 C14 A55**	6	4.35	3	14.0	58
28-18	**MTI 06059 C20 A55**	6	5.85	3	20.5	58
20-14	**MTI 0807 C23 A55**	8	7.00	3	23.0	64

Order example: MTI 03023 C7 A55 MT11

● First choice ○ Alternative

ISO

Tools for Internal Thread

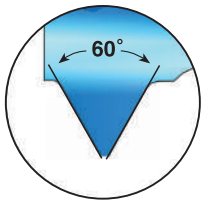

Detail A

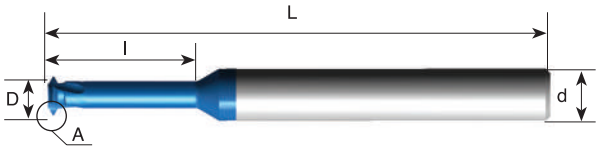

Grade	P	M	K	N	S	H
MT11	●	●	●	○	●	≤62 HRc

Pitch mm	M Coarse	M Fine	Ordering Code	d	D	No. of Flutes	l	L	Thread depth
0.25	M1		**MTI 03007 C3 0.25 ISO**	3	0.72	3	3.6	39	3.5xD1
0.25	M1.2	M1.4 M1.6	**MTI 03009 C4 0.25 ISO**	3	0.90	3	4.3	39	3.5xD1
0.3	M1.4		**MTI 03011 C5 0.3 ISO**	3	1.05	3	5.0	39	3.5xD1
0.35	M1.6	M2 M2.2	**MTI 03012 C6 0.35 ISO**	3	1.20	3	5.7	39	3.5xD1
0.4	M2		**MTI 03016 C7 0.4 ISO**	3	1.55	3	7.1	39	3.5xD1
0.45	M2.5		**MTI 0302 C8 0.45 ISO**	3	1.95	3	8.8	39	3.5xD1
0.5	M3	M3.5 M4	**MTI 03024 C10 0.5 ISO**	3	2.37	3	10.6	39	3.5xD1
0.7	M4		**MTI 04032 D14 0.7 ISO**	4	3.20	4	14.0	50	3.5xD1

Order example: MTI 03012 C6 0.35 ISO MT11

UN

Tools for Internal Thread

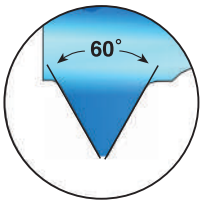

Detail A

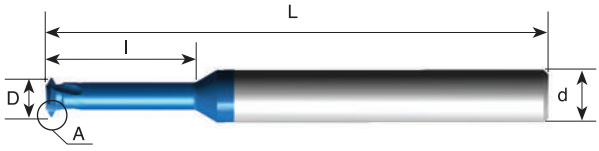

Grade	P	M	K	N	S	H
MT11	●	●	●	○	●	≤62 HRc

Pitch TPI	UNC	UNF	Ordering Code	d	D	No. of Flutes	l	L	Thread depth
80		0	**MTI 03012 C5 80 UN**	3	1.15	3	5.5	39	3.5xD1
72		1	**MTI 03015 C7 72 UN**	3	1.45	3	6.6	39	3.5xD1
56	2	3	**MTI 03016 C9 56 UN**	3	1.65	3	8.9	39	3.5xD1
40	4		**MTI 03021 C10 40 UN**	3	2.10	3	10.1	39	3.5xD1

Order example: MTI 03016 C9 56 UN MT11

● First choice ○ Alternative

Trapez-DIN 103

Tools for Internal Thread

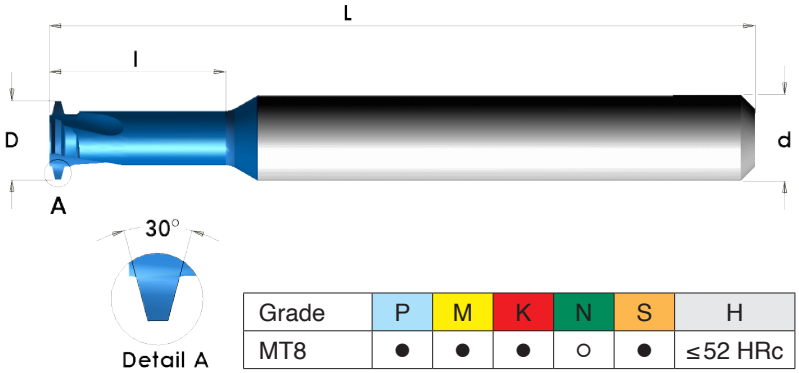

Grade	P	M	K	N	S	H
MT8	●	●	●	○	●	≤52 HRc

Pitch mm	Thread size	Ordering Code	d	D	No. of Flutes	l	L	Thread Depth
1.5	Tr8x1.5 Tr9x1.5	**MTI 06055 C13 1.5 TR**	6	5.5	3	13.5	58	2xD1
2	Tr10x2 Tr11x2	**MTI 08066 C21 2 TR**	8	6.6	3	21.0	64	2xD1
2	Tr12x2 Tr14x2	**MTI 10086 D25 2 TR**	10	8.6	4	25.0	73	2xD1
3	Tr12x3	**MTI 0807 C25 3 TR**	8	7.0	3	25.0	64	2xD1
3	Tr14x3 Tr22x3	**MTI 10089 D29 3 TR**	10	8.9	4	29.0	73	2xD1
4	Tr16x4 Tr18x4 Tr20x4	**MTI 10092 C33 4 TR**	10	9.2	3	33.0	73	2xD1
5	Tr22x5 Tr24x5 Tr26x5	**MTI 14135 D45 5 TR**	14	13.5	4	45.0	105	2xD1

Order example: MTI 08066 C21 2 TR MT8

Acme

Tools for Internal Thread
Inch Shank

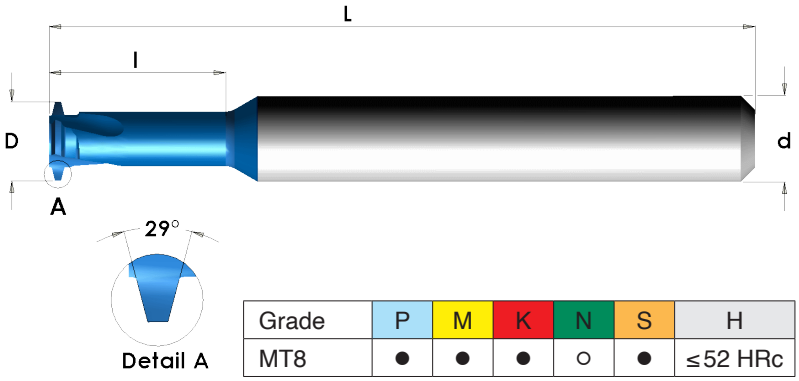

Grade	P	M	K	N	S	H
MT8	●	●	●	○	●	≤52 HRc

Pitch TPI	Thread size	Ordering Code	d	D	No. of Flutes	l	L	Thread Depth
16	1/4-16	**MTI 0250 C04 16 ACME**	1/4	4.3	3	9.7	64	1.5xD1
14	5/16-14	**MTI 0250 C06 14 ACME**	1/4	5.2	3	15.2	64	2xD1
12	3/8-12 7/16-12	**MTI 0250 C08 12 ACME**	1/4	6.1	3	19.1	64	2xD1
10	1/2-10	**MTI 0375 D10 10 ACME**	3/8	8.3	4	25.4	76	2xD1
8	5/8-8	**MTI 0500 D11 8 ACME**	1/2	10.4	4	27.9	89	1.5xD1
6	3/4-6 7/8-6	**MTI 0500 D12 6 ACME**	1/2	12.0	4	30.5	89	1.5xD1
5	1-5 1 1/8-5 1 1/4-5	**MTI 0625 E15 5 ACME**	5/8	15.9	5	38.1	102	1.5xD1

Order example: MTI 0375 D10 10 ACME MT8

● First choice ○ Alternative

FMTI Multi Flute

CPT has designed a unique line of solid carbide thread milling tools FMTI for increased productivity and high performance.

Large number of flutes enables to achieve significant shorter machining time.

Carbide grade: MT6

Ultra-Fine carbide grade with high hardness and toughness provides an excellent solution for machining steels, stainless steels, and super alloys Ni or Ti base.
With a universal PVD multi-layer coating, provides high heat and wear resistance.

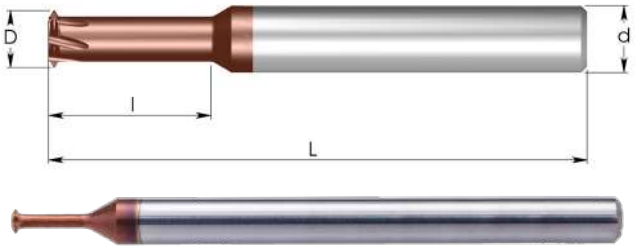

ISO
Tools for Internal Thread

Grade	P	M	K	N	S	H
MT6	●	●	○	○	●	≤58 HRc

Pitch mm	M Coarse	M Fine	Ordering Code	d	D	No. of Flutes	l	L	Thread Depth
0.35	M1.6, M1.8	M2	**FMTI 03012 E3 0.35 ISO**	3	1.20	5	3.6	38	2xD1
0.4	M2		**FMTI 03016 F4 0.4 ISO**	3	1.55	6	4.4	38	2xD1
0.45	M2.5		**FMTI 0302 F5 0.45 ISO**	3	1.95	6	5.5	38	2xD1
0.5	M3	M4, M5	**FMTI 03024 F6 0.5 ISO**	3	2.40	6	6.5	38	2xD1
0.7	M4		**FMTI 04032 F8 0.7 ISO**	4	3.20	6	8.7	50	2xD1
0.8	M5		**FMTI 0404 G10 0.8 ISO**	4	4.00	7	10.8	50	2xD1
1.0	M6	M8	**FMTI 06048 G13 1.0 ISO**	6	4.80	7	13.0	57	2xD1

Order example: FMTI 03024 F6 0.5 ISO MT6

UN
Tools for Internal Thread

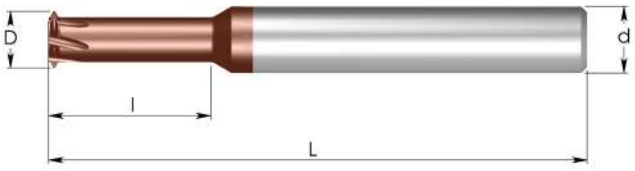

Grade	P	M	K	N	S	H
MT6	●	●	○	○	●	≤58 HRc

Pitch TPI	UNC	UNF	Ordering Code	d	D	No. of Flutes	l	L	Thread Depth
72		1	**FMTI 03015 E4 72 UN**	3	1.45	5	4.1	38	2xD1
56	2	3	**FMTI 03017 F4 56 UN**	3	1.65	6	4.8	38	2xD1
40	4		**FMTI 03021 F6 40 UN**	3	2.10	6	6.3	38	2xD1
32		10	**FMTI 04038 F10 32 UN**	4	3.80	6	10.5	50	2xD1
28		1/4	**FMTI 06052 G13 28 UN**	6	5.20	7	13.6	57	2xD1

Order example: FMTI 03017 F4 56 UN MT6

● First choice ○ Alternative

Multi - Function Thread Mills
3 in 1 Operations

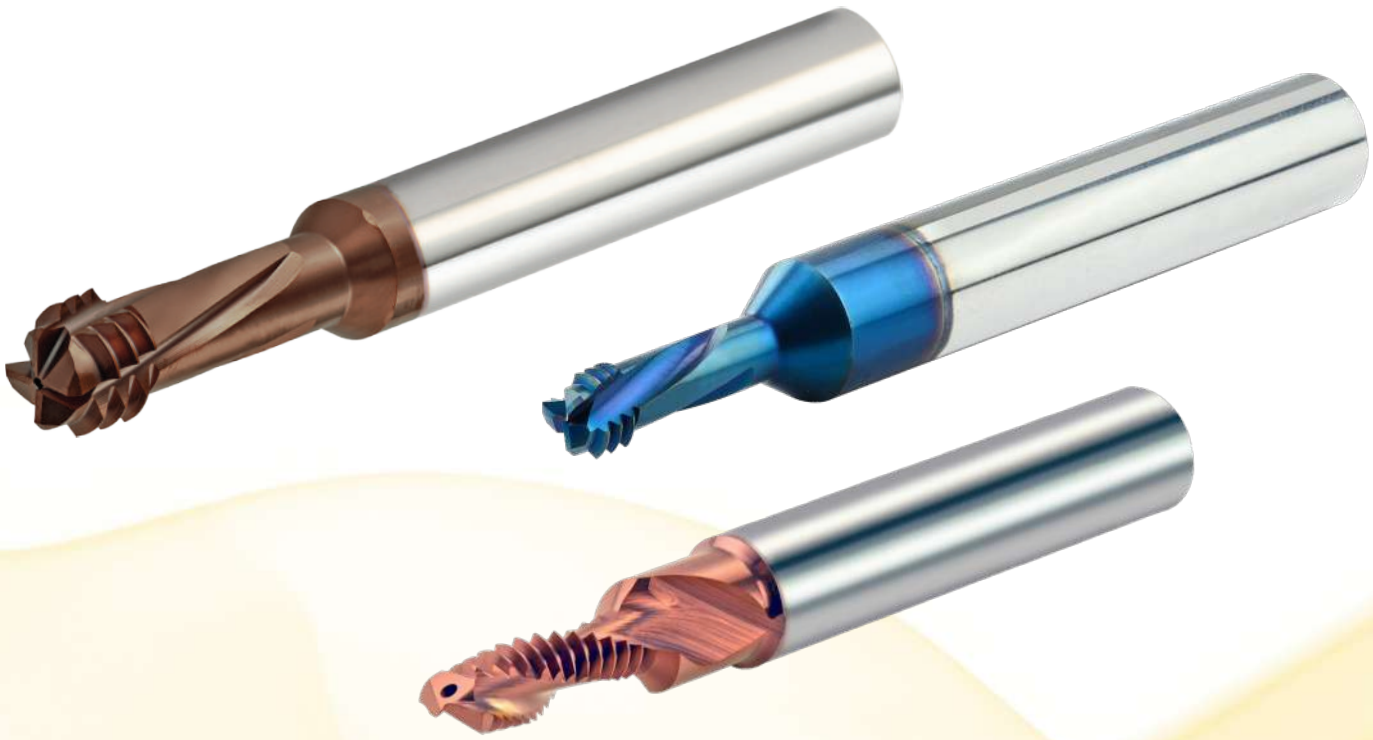

High Performance tools with internal coolant supply for the production of internal threads.

Produces the thread hole, the thread and a chamfer in one work process.

Contents:	Page:	Contents:	Page:
DMT, DMTH Introduction	2	**DMTH**	6-7
Advantages	2	ISO	6
Product Identification	2	UN	6
DMT	3-5	Case Studies	7
ISO	3	**MT Drill - MTD**	8-9
UN	4	Advantages	8
G (BSP)	5	Product Identification	8
NPT	5	ISO	9
		UNC	9
		UNF	9

DMT and DMTH

DMT

High Performance tools with internal coolant supply for the production of internal threads. Circular movement produces the thread hole, the thread and a chamfer in one work process.

Carbide grade: MT7 Sub-micron grade with Titanium Aluminum Nitride multi-layer coating (ISO K10-K20).

DMTH

The DMTH tools expand the range of the existing DMT line providing the ability to cut steels, hardened materials, stainless steels and super alloys.

- Advance Carbide grade dedicated for hardened materials
- Triple blue coating for high wear and heat resistance

Carbide grade: MT11 Ultra-fine Sub-micron grade with advanced PVD triple blue coating (for DMTH).

Advantages

- Cancels the need for drilling the hole.
- Short cycle time and high performance reduces machining costs.
- Suitable for blind and through holes.
- Full Profile thread.
- No time lost for tool change, since drilling, chamfering and thread milling are done with one tool.
- Same tool for right-hand or left-hand threads.
- Cuts a wide range of materials.

Product Identification

DMT 3 in 1 - *Drill, Thread, Chamfer Ordering Codes

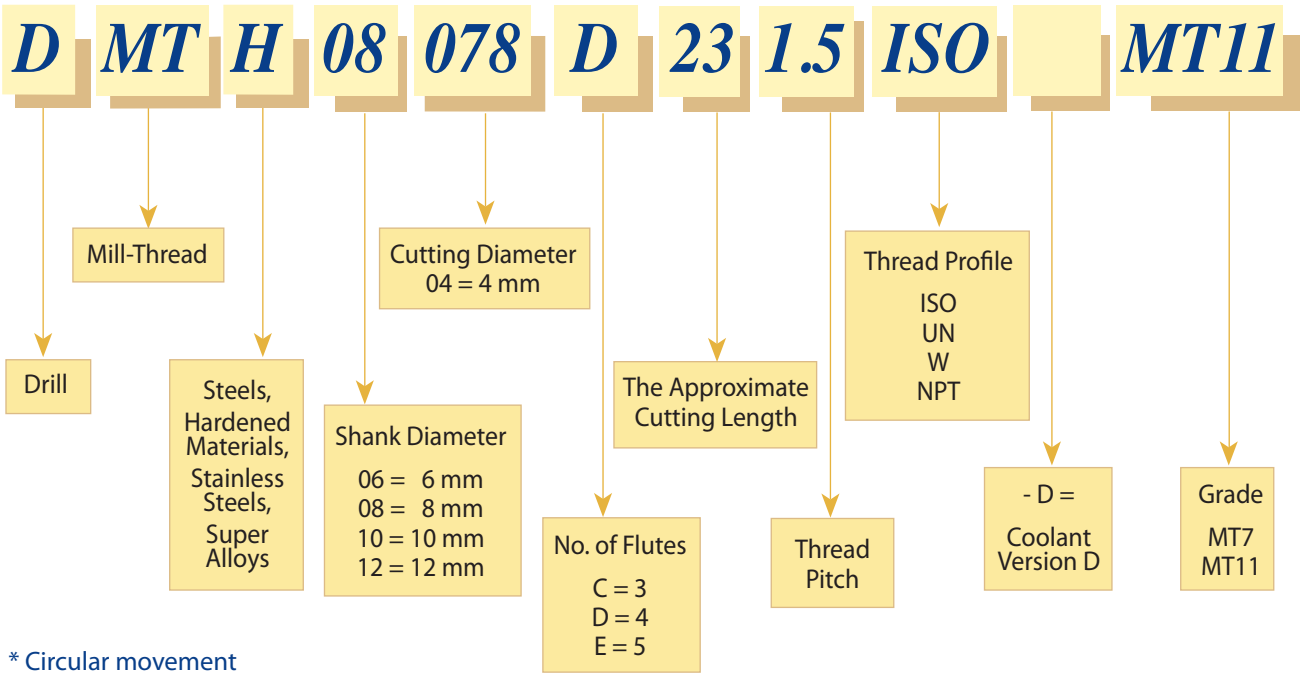

* Circular movement

DMT

Demonstration

ISO With internal coolant bore

Tools for Internal Thread

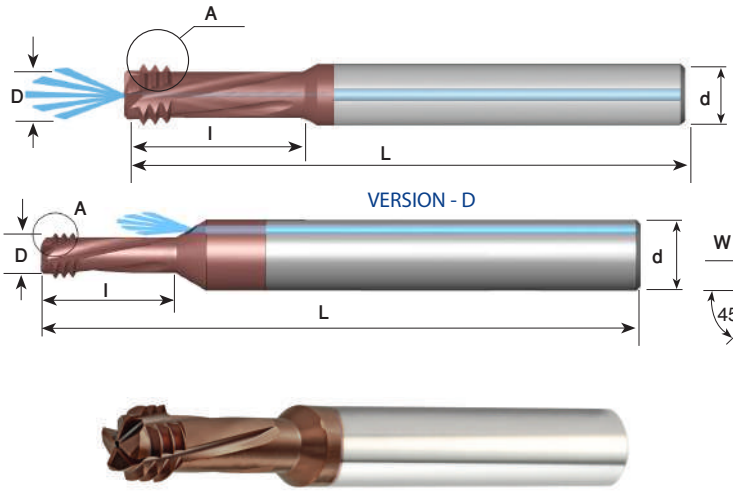

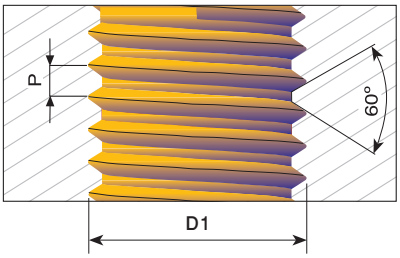

Left hand cutting
For CNC code use M04

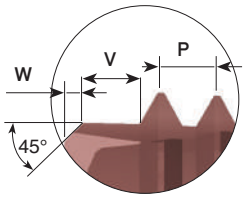

Detail A

Grade	P	M	K	N	S	H
MT7	○	●	●	●	○	

Pitch mm	M Coarse	M Fine	Ordering Code	d	D	No. of Flutes	l	W	V	L	Thread depth
0.5	M3	M3.5,M4	*DMT 06024 C7 0.5 ISO-D	6	2.40	3	7.2	0.2	0.5	58	2xD1
0.7	M4		*DMT 06032 C11 0.7 ISO-D	6	3.15	3	11.6	0.2	0.7	58	2.5xD1
0.8	M5		*DMT 0604 C14 0.8 ISO-D	6	4.00	3	14.4	0.3	0.8	58	2.5xD1
1.0	M6, M7	M8,M9	DMT 08047 C14 1.0 ISO	8	4.70	3	14.0	0.4	1.0	64	2xD1
1.0	M6, M7	M8,M9	DMT 08047 C20 1.0 ISO	8	4.70	3	20.4	0.4	1.0	64	3xD1
1.25	M8,M9	M10,M12	DMT 08061 D18 1.25 ISO	8	6.10	4	18.0	0.5	1.25	64	2xD1
1.25	M8,M9	M10,M12	DMT 08061 D27 1.25 ISO	8	6.10	4	27.0	0.5	1.25	64	3xD1
1.5	M10	M13-M15	DMT 08078 D23 1.5 ISO	8	7.80	4	23.0	0.6	1.5	64	2xD1
1.75	M12		DMT 1009 D26 1.75 ISO	10	9.00	4	26.0	0.6	1.75	73	2xD1
2.0	M16	M17-M23	DMT 12118 D35 2.0 ISO	12	11.80	4	35.0	0.6	2.0	84	2xD1

* Tools version-D

● First choice ○ Alternative

Order example: DMT 08047 C14 1.0 ISO MT7

UN With internal coolant bore

Tools for Internal Thread

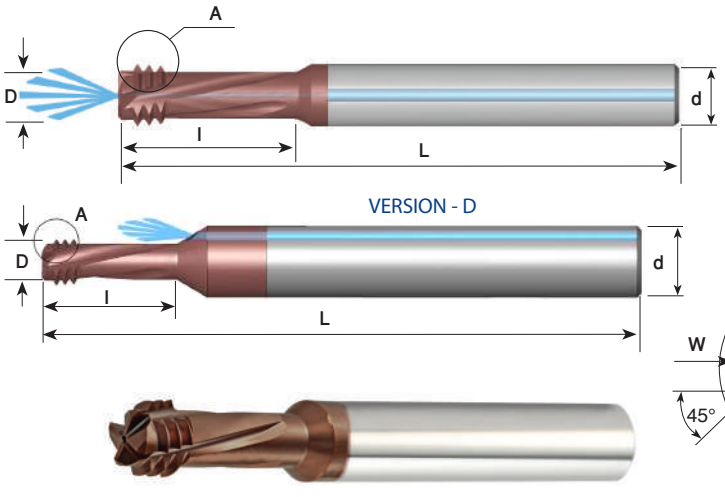

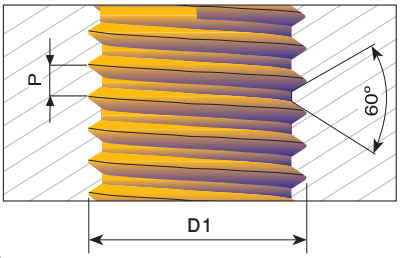

Left hand cutting
For CNC code use M04

Grade	P	M	K	N	S	H
MT7	○	●	●	●	○	

For thread depth up to 2 x D1

Pitch TPI	UN, UNEF, UNF UNC, UNS	Ordering Code	d	D	No. of Flutes	l	W	V	L	Thread length
40	4, 5, 6	*DMT 06021 C7 40 UN-D	6	2.10	3	7.0	0.1	0.6	58	2xD1
36	8	*DMT 06033 C12 36 UN-D	6	3.30	3	12.0	0.2	0.7	58	2.5xD1
32	6	*DMT 06026 C8 32 UN-D	6	2.60	3	8.7	0.2	0.8	58	2xD1
32	8	*DMT 06032 C12 32 UN-D	6	3.20	3	12.3	0.3	0.8	58	2.5xD1
32	10	*DMT 06038 C14 32 UN-D	6	3.80	3	14.0	0.3	0.8	58	2.5xD1
28	1/4-3/8	DMT 0805 C14 28 UN	8	5.00	3	14.5	0.4	0.9	64	2xD1
24	10,12	*DMT 06035 C12 24 UN-D	6	3.50	3	12.1	0.3	1.05	58	2xD1
24	5/16-1/2	DMT 08065 D17 24 UN	8	6.50	4	17.0	0.5	1.05	64	2xD1
20	1/4-3/8	DMT 08048 C14 20 UN	8	4.80	3	14.0	0.4	1.25	64	2xD1
18	5/16-7/16	DMT 0806 D17 18 UN	8	6.00	4	17.0	0.5	1.4	64	2xD1
16	3/8-1/2	DMT 08067 C22 16 UN	8	6.70	3	22.0	0.5	1.6	64	2xD1
14	7/16	DMT 0808 D26 14 UN	8	8.00	4	26.5	0.6	1.8	64	2xD1
13	1/2	DMT 1010 D29 13 UN	10	10.00	4	29.8	0.6	2.0	73	2xD1

* Tools version-D

● First choice ○ Alternative

Order example: DMT 08067 C22 16 UN MT7

G (BSP) With internal coolant bore

Tools for Internal Thread

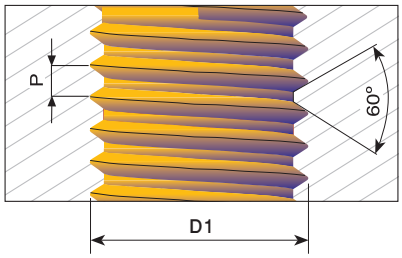

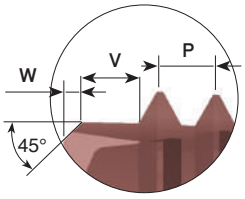

Detail A

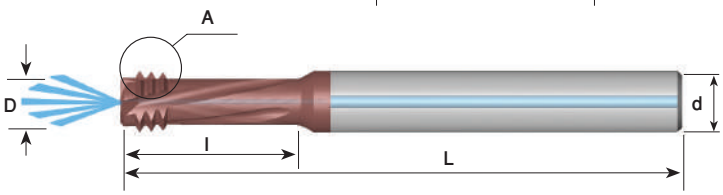

Grade	P	M	K	N	S	H
MT7	○	●	●	●	○	

Pitch TPI	Standard	Ordering Code	d	D	No. of Flutes	l	W	V	L	Thread length
28	G1/16	**DMT 0806 D17 28 W**	8	6.00	4	17.8	0.6	0.9	64	2xD1
28	G1/8	**DMT 08078 D21 28 W**	8	7.80	4	21.8	0.6	0.9	64	2xD1
19	G1/4	**DMT 12104 D29 19 W**	12	10.40	4	29.6	0.7	1.3	84	2xD1
19	G3/8	**DMT 1414 D36 19 W**	14	14.00	4	36.7	0.8	1.3	83	2xD1

Order example: DMT 08078 D21 28 W MT7

NPT With internal coolant bore

Tools for Internal Thread

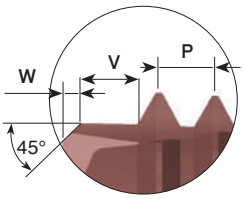

Detail A

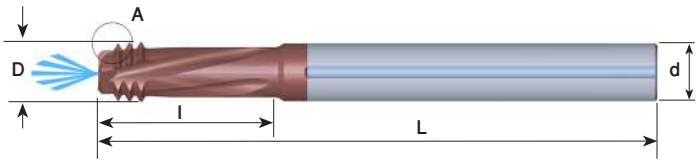

Grade	P	M	K	N	S	H
MT7	○	●	●	●	○	

Pitch TPI	Standard	Ordering Code	d	D	No. of Flutes	l	W	V	L
27	1/16	**DMT 08057 D11 27 NPT**	8	5.70	4	11.2	0.4	0.9	64
27	1/8	**DMT 08076 D12 27 NPT**	8	7.60	4	12.1	0.4	0.9	64
18	1/4	**DMT 1010 D18 18 NPT**	10	10.00	4	18.2	0.6	1.4	73
18	3/8	**DMT 1212 D19 18 NPT**	12	12.00	4	19.6	0.6	1.4	84
14	1/2	**DMT 1616 E26 14 NPT**	16	16.00	5	26.9	0.6	1.8	92

Order example: DMT 1010 D18 18 NPT MT7

● First choice ○ Alternative

DMTH

For information see page B10-2

ISO

Tools for Internal Thread

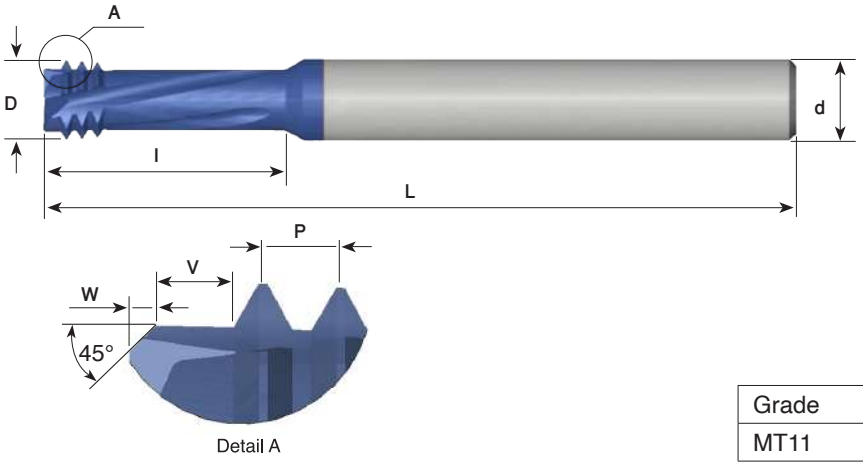

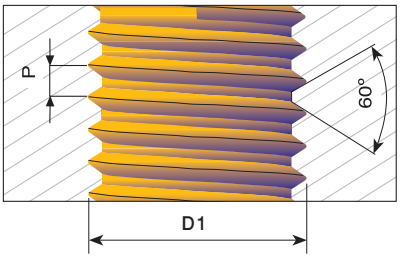

Left hand cutting
For CNC code use M04

Grade	P	M	K	N	S	H
MT11	●	●	○	○	●	≤55 HRc

Pitch mm	M Coarse	M Fine	Ordering Code	d	D	No. of Flutes	l	W	V	L	Thread depth
0.7	M4		**DMTH 06032 C11 0.7 ISO**	6	3.15	3	11.6	0.2	0.7	58	2.5xD1
0.8	M5		**DMTH 0604 C14 0.8 ISO**	6	4.00	3	14.4	0.3	0.8	58	2.5xD1
1.0	M6,M7	M8,M9	**DMTH 08047 C14 1.0 ISO**	8	4.70	3	14.4	0.4	1.0	64	2xD1
1.25	M8,M9	M10,M12	**DMTH 08061 D19 1.25 ISO**	8	6.10	4	19.0	0.5	1.25	64	2xD1
1.5	M10	M13-M15	**DMTH 08078 D23 1.5 ISO**	8	7.80	4	23.6	0.6	1.5	64	2xD1
1.75	M12		**DMTH 1009 D28 1.75 ISO**	10	9.00	4	28.1	0.6	1.75	73	2xD1
2.0	M16	M17-M23	**DMTH 12118 D36 2.0 ISO**	12	11.80	4	36.6	0.6	2.0	84	2xD1

Order example: DMTH 1009 D28 1.75 ISO MT11

UN

Tools for Internal Thread

Grade	P	M	K	N	S	H
MT11	●	●	○	○	●	≤55 HRc

Pitch TPI	UN, UNEF, UNF UNC, UNS	Ordering Code	d	D	No. of Flutes	l	W	V	L	Thread depth
40	4, 5, 6	**DMTH 06021 C7 40 UN**	6	2.10	3	7.0	0.1	0.6	58	2xD1
32	6	**DMTH 06026 C8 32 UN**	6	2.60	3	8.7	0.1	0.8	58	2xD1
28	1/4-3/8	**DMTH 0805 C14 28 UN**	8	5.00	3	14.9	0.4	0.9	64	2xD1
24	5/16-1/2	**DMTH 08065 D18 24 UN**	8	6.50	4	18.5	0.5	1.05	64	2xD1
20	1/4-3/8	**DMTH 08048 C15 20 UN**	8	4.80	3	15.6	0.4	1.25	64	2xD1
18	5/16-7/16	**DMTH 0806 D19 18 UN**	8	6.00	4	19.2	0.5	1.4	64	2xD1
16	3/8-1/2	**DMTH 08067 C22 16 UN**	8	6.70	3	22.8	0.5	1.6	64	2xD1
13	1/2	**DMTH 10092 C30 13 UN**	10	9.20	3	30.0	0.6	2.0	73	2xD1
11	5/8	**DMTH 12114 C37 11 UN**	12	11.40	3	37.0	0.6	2.3	84	2xD1

Order example: DMTH 08048 C15 20 UN MT11

● First choice ○ Alternative

Case Studies

Case Study no. 1

Tool Description	DMTH 08047 C14 1.0 ISO MT11
Internal Thread	M6x1.0
Thread Length	12 mm
Material	Steel 12-15 HRc SAE 4340
Cutting Data	Vc= 90 m/min Fz= 0.03 mm/tooth
Cycle Time	28 seconds
Tool Life	776

Case Study no. 2

Tool Description	DMTH 08047 C14 1.0 ISO MT11
Internal Thread	M6x1.0
Thread Length	12 mm
Material	Steel 44-45 HRc SAE 4340
Cutting Data	Vc= 71 m/min Fz= 0.02 mm/tooth
Cycle Time	53 seconds
Tool Life	196

MT Drill - MTD

Designed to drill, chamfer and thread mill the hole in one operation.

Carbide grade: **MT7:** Sub-Micron carbide grade combines high hardness and toughness, with PVD triple coating for smooth cutting and high performance.

K20: Uncoated Sub-Micron carbide grade dedicated for machining Aluminum and Cast Iron.

Advantages

- Two fluted drill/thread milling cutter, with 45˚ chamfering. Ideal for mass production applications.
- Reduces cycle times by combining operations and eliminating tool changes.
- For both right and left hand internal threads.
- Same tool for blind or through hole.
- High thread surface quality.
- Internal coolant.
- Optimized carbide grade for Aluminum and Cast Iron.



Product Identification

Mill-Thread Drill Ordering Codes

MTD	08	048	B	12	1.0	ISO	MT7
MT Drill	Shank Diameter 06 = 6 mm 08 = 8 mm 10 = 10 mm 12 = 12 mm	Cutting Diameter	No. of Flutes B = 2	Approximate Cutting Length 12 = 12.0 mm	Thread Pitch	Thread Profile ISO UN	Carbide Grade K20 MT7

MT Drill - MTD

Tools for Internal thread

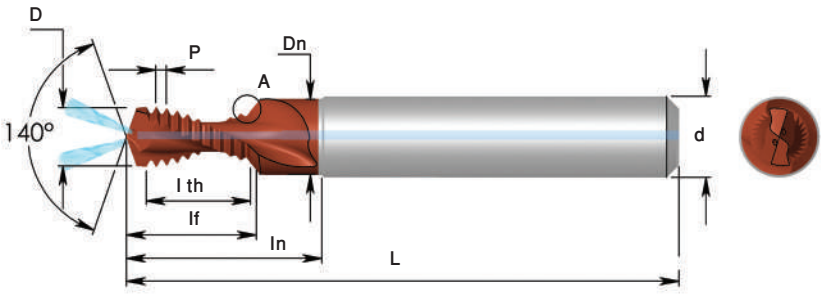

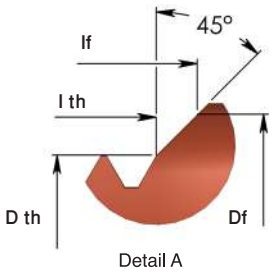

Thread length: 2xD

Grade	P	M	K	N	S	H
K20			●	●		
MT7			●	●		

ISO

Pitch mm	M Coarse	Ordering Code	d	D	Dth	Df	Dn	ln	l th	lf	L
0.7	M4	**MTD 06032 B7 0.7 ISO**	6	3.30	3.20	4.7	4.9	15	7.7	9.8	54
0.8	M5	**MTD 0604 B9 0.8 ISO**	6	4.20	4.00	5.5	5.7	18	9.6	11.9	54
1.0	M6	**MTD 08048 B12 1.0 ISO**	8	5.00	4.80	6.5	6.8	26	12.0	14.8	62
1.25	M8	**MTD 10064 B15 1.25 ISO**	10	6.75	6.40	8.6	8.9	34	15.1	18.7	74
1.5	M10	**MTD 1208 B19 1.5 ISO**	12	8.50	8.00	10.5	10.8	35	19.5	23.8	80

UNC

Pitch TPI	UNC	Ordering Code	d	D	Dth	Df	Dn	ln	lth	lf	L
20	1/4	**MTD 08048 B12 20 UN**	8	5.20	4.80	6.7	6.9	26	12.7	15.9	62
18	5/16	**MTD 10061 B15 18 UN**	10	6.60	6.10	8.3	8.6	34	15.5	19.2	74
16	3/8	**MTD 12075 B19 16 UN**	12	8.00	7.50	10.0	10.3	35	19.1	23.4	80
14	7/16	**MTD 12088 B21 14 UN**	12	9.40	8.80	11.4	11.6	35	21.8	26.6	80

UNF

Pitch TPI	UNF	Ordering Code	d	D	Dth	Df	Dn	ln	lth	lf	L
32	10	**MTD 06038 B9 32 UN**	6	4.10	3.80	5.4	5.6	18	9.5	11.8	54
28	1/4	**MTD 08052 B13 28 UN**	8	5.50	5.20	6.7	6.9	26	13.0	15.7	62
24	5/16	**MTD 10066 B15 24 UN**	10	6.90	6.60	8.4	8.7	34	15.9	19.1	74
24	3/8	**MTD 12082 B19 24 UN**	12	8.50	8.20	10.0	10.3	35	19.0	22.5	80

- Tools without coolant available upon request.
- Cylindrical shank DIN6535-HA (Weldon shank, available upon request).

Order example: MTD 08048 B12 20 UN MT7

● First choice ○ Alternative



MTSH
Demonstration

MTSH Type

CPT are pioneers in offering solid carbide thread mills designed specifically for the machining of hardened materials up to 62HRc. These tools provide high performance, improved cut and an excellent surface finish.

FSH Type

High productive Solid Carbide Thread-Mills with a large number of flutes for machining hard materials up to 65 HRC

MTH Type

CPT provide innovative mill thread solid carbide tools for machining:

- Hardened steels and cast iron up to 62 HRc.
- High temperature alloys.
- Titanium alloys.
- Super Alloys (Hastelloy, Inconel, Nickel Base Alloys).
- Threading from ISO M1.4 x 0.3 and 0-80UN
- Perfect solution for the Die and Mold industry
- Working at high cutting speeds
- Short machining time
- Low cutting forces thanks to the short profile

Advantages

- Same tool performs thread milling and chamfering - saves machining time.
- Increased cutting diameter - better rigidity and stability.
- Coating provides high wear and heat resistance.
- Ultra fine grade - dedicated for hardened materials.
- Short chips are produced, insure high process security.
- Short cycle time - increases productivity.
- Thread length up to 2xD.

Contents:	Page:	Contents:	Page:
Product Identification	2	**FSH**	6
MTSH	3-5	ISO	6
ISO	3	UN	6
UN	4	**MTH**	7
G55° - BSW, BSP	5	ISO	7
MJ	5	UN	7
UNJ	5		

Product Identification

Mini Mill-Thread MTSH Type Ordering Codes

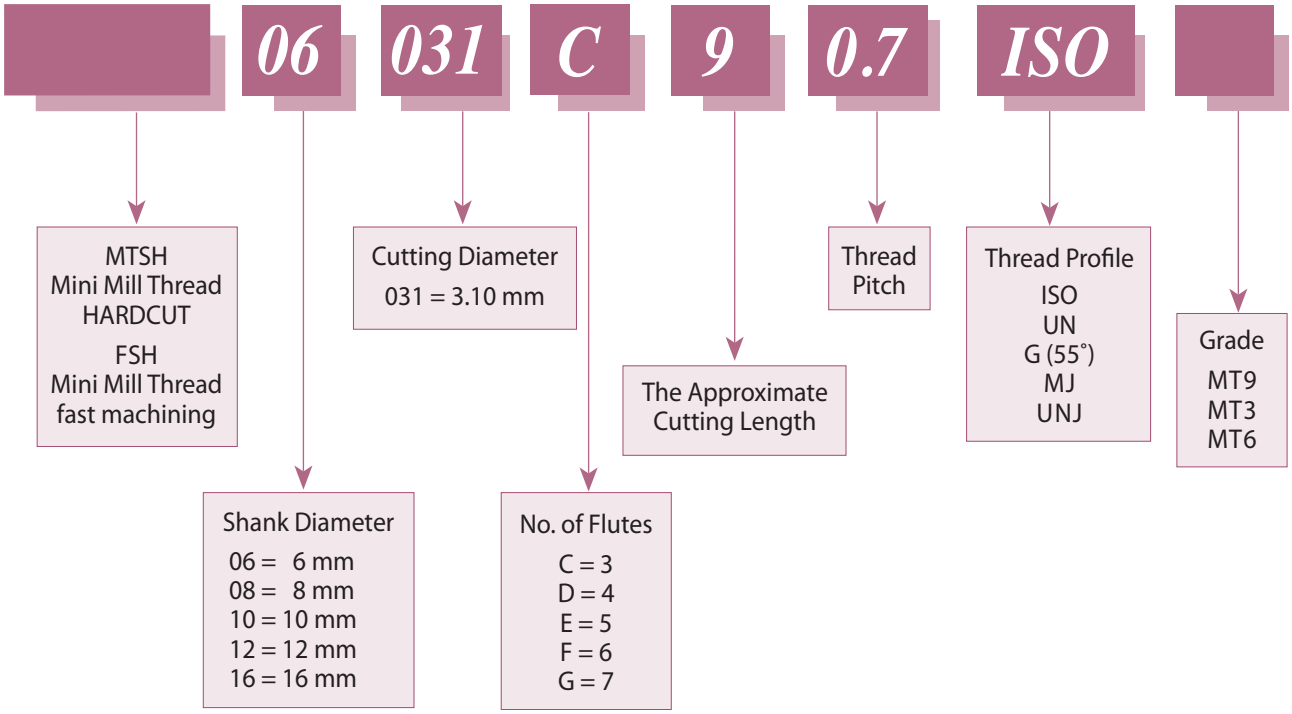

MTH Type Ordering Codes

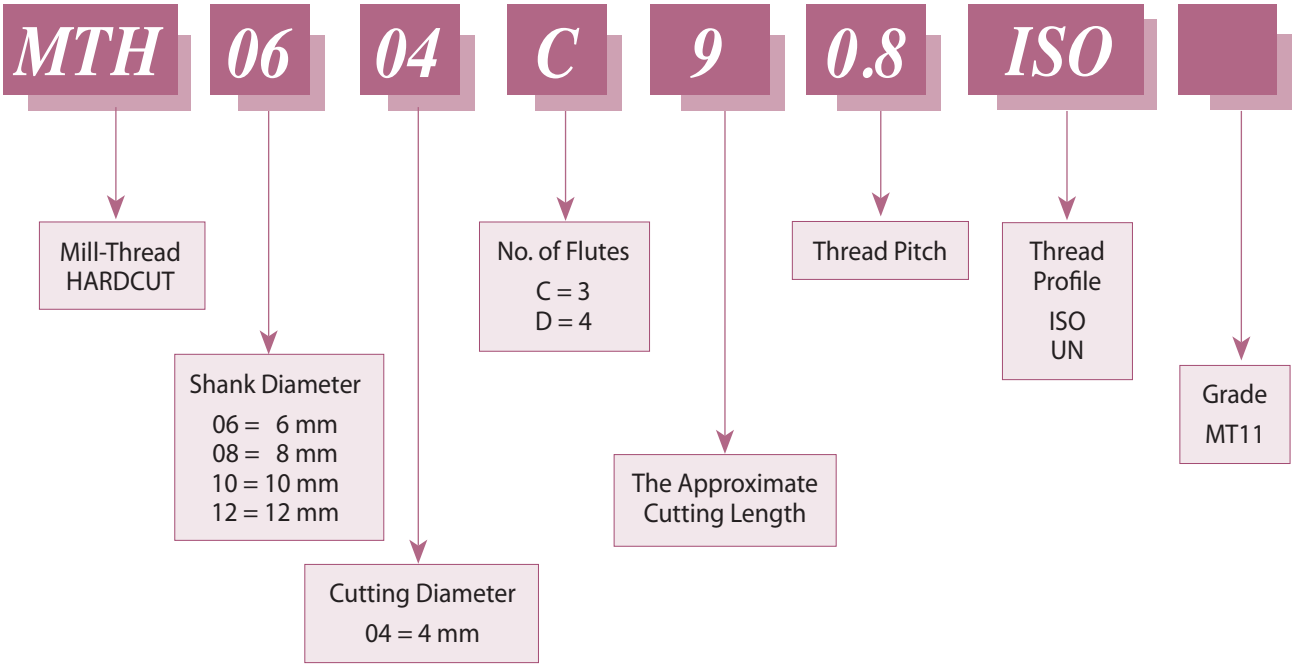

MTSH
ISO
Tools for Internal Thread

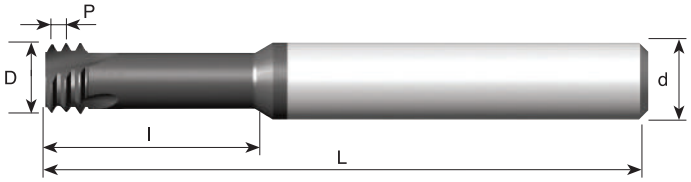



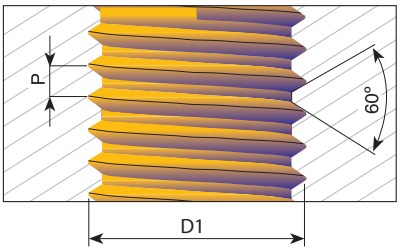

Left hand cutting
For CNC code use M04

Grade	P	M	K	N	S	H
MT9	●	●	○	○	●	≤62 HRc

Pitch mm	M Coarse	M Fine	Ordering Code	d	D	No. of Flutes	l	L	Thread depth
0.3	M1.4		**MTSH 03011 C4 0.3 ISO**	3	1.05	3	4.0	39	3xD1
0.35	M1.6, M1.8	M2, M2.5	**MTSH 03012 C5 0.35 ISO**	3	1.20	3	4.8	39	3xD1
0.4	M2		**MTSH 06016 C4 0.4 ISO**	6	1.53	3	4.5	58	2xD1
0.4	M2		**MTSH 03016 C6 0.4 ISO**	3	1.53	3	6.0	39	3xD1
0.45	M2.2		**MTSH 06017 C5 0.45 ISO**	6	1.65	3	5.0	58	2xD1
0.45	M2.2		**MTSH 06017 C7 0.45 ISO**	6	1.65	3	7.0	58	3xD1
0.45	M2.5		**MTSH 0602 C5 0.45 ISO**	6	1.95	3	5.5	58	2xD1
0.45	M2.5		**MTSH 0602 C7 0.45 ISO**	6	1.95	3	7.5	58	3xD1
0.5	M3	M4,M5	**MTSH 06024 C6 0.5 ISO**	6	2.37	3	6.5	58	2xD1
0.5	M3	M4,M5	**MTSH 06024 C9 0.5 ISO**	6	2.37	3	9.5	58	3xD1
0.6	M3.5		**MTSH 06028 C7 0.6 ISO**	6	2.75	3	7.5	58	2xD1
0.6	M3.5		**MTSH 06028 C10 0.6 ISO**	6	2.75	3	10.5	58	3xD1
0.7	M4		**MTSH 06031 C9 0.7 ISO**	6	3.10	3	9.0	58	2xD1
0.7	M4		**MTSH 06031 C12 0.7 ISO**	6	3.10	3	12.5	58	3xD1
0.7	M4		**MTSH 06032 C12 0.7 ISO-L**	6	3.20	3	12.5	105	3xD1
0.8	M5		**MTSH 06038 C12 0.8 ISO**	6	3.80	3	12.5	58	2xD1
0.8	M5		**MTSH 06038 C16 0.8 ISO**	6	3.80	3	16.0	58	3xD1
0.8	M5		**MTSH 0604 C16 0.8 ISO-L**	6	4.00	3	16.0	105	3xD1
1.0	M6	M8	**MTSH 06047 C14 1.0 ISO**	6	4.65	3	14.0	58	2xD1
1.0	M6	M8	**MTSH 06047 C20 1.0 ISO**	6	4.65	3	20.0	58	3xD1
1.0	M6	M8	**MTSH 06048 C20 1.0 ISO-L**	6	4.80	3	20.0	105	3xD1
1.0		M10,M12	**MTSH 0808 D31 1.0 ISO**	8	8.00	4	31.0	64	3XD1
1.25	M8	M10,M12	**MTSH 0606 C18 1.25 ISO**	6	6.00	3	18.0	58	2xD1
1.25	M8	M10,M12	**MTSH 0606 C24 1.25 ISO**	6	6.00	3	24.0	58	3xD1
1.5	M10	M14,M16	**MTSH 08078 C23 1.5 ISO**	8	7.80	3	23.0	64	2xD1
1.5	M10	M14,M16	**MTSH 08078 D31 1.5 ISO**	8	7.80	4	31.5	64	3xD1
1.75	M12		**MTSH 1009 C26 1.75 ISO**	10	9.00	3	26.0	73	2xD1
2.0	M14	M17	**MTSH 1010 D30 2.0 ISO**	10	10.00	4	30.0	73	2xD1
2.0	M16	M18,M20	**MTSH 12118 D35 2.0 ISO**	12	11.80	4	35.0	84	2xD1

Order example: MTSH 0808 D31 1.0 ISO MT9

● First choice ○ Alternative

UN

Tools for Internal Thread

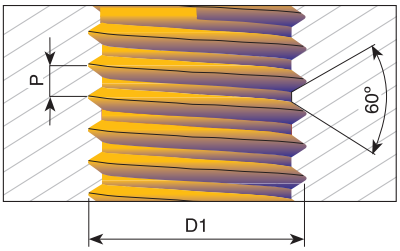

Left hand cutting
For CNC code use M04

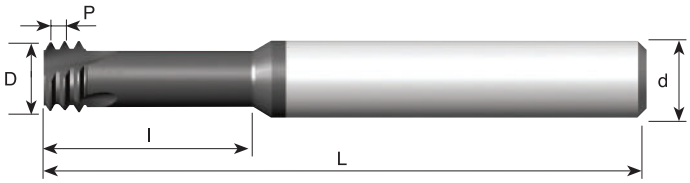

Grade	P	M	K	N	S	H
MT9	●	●	○	○	●	≤62 HRc

Pitch TPI	UNC	UNF	Ordering Code	d	D	No. of Flutes	l	L	Thread depth
80		0	**MTSH 06012 C4 80 UN**	6	1.15	3	4.0	58	3xD1
72		1	**MTSH 06014 C3 72 UN**	6	1.45	3	3.7	58	2xD1
72		1	**MTSH 03015 C6 72 UN**	3	1.45	3	6.0	39	3xD1
64	1	2	**MTSH 06014 C3 64 UN**	6	1.40	3	3.8	58	2xD1
56	2	3	**MTSH 06016 C4 56 UN**	6	1.65	3	4.4	58	2xD1
56	2	3	**MTSH 06016 C6 56 UN**	6	1.65	3	6.6	58	3xD1
48	3	4	**MTSH 06019 C5 48 UN**	6	1.90	3	5.2	58	2xD1
40	4		**MTSH 06021 C6 40 UN**	6	2.10	3	6.3	58	2xD1
40	4		**MTSH 06021 C8 40 UN**	6	2.10	3	8.0	58	3xD1
40	5	6	**MTSH 06024 C7 40 UN**	6	2.45	3	7.0	58	2xD1
40	5	6	**MTSH 06024 C9 40 UN**	6	2.45	3	9.6	58	3xD1
36		8	**MTSH 06033 C9 36 UN**	6	3.30	3	9.0	58	2xD1
32	6		**MTSH 06025 C7 32 UN**	6	2.55	3	7.1	58	2xD1
32	6		**MTSH 06025 C10 32 UN**	6	2.55	3	10.5	58	3xD1
32	8		**MTSH 06032 C9 32 UN**	6	3.20	3	9.5	58	2xD1
32	8		**MTSH 06032 C12 32 UN**	6	3.20	3	12.5	58	3xD1
32		10	**MTSH 06037 C10 32 UN**	6	3.70	3	10.5	58	2xD1
32		10	**MTSH 06037 C15 32 UN**	6	3.70	3	15.0	58	3xD1
28		12	**MTSH 06042 C11 28 UN**	6	4.20	3	11.0	58	2xD1
28		1/4	**MTSH 0605 C14 28 UN**	6	5.00	3	14.5	58	2xD1
28		1/4	**MTSH 0605 C19 28 UN**	6	5.00	3	19.0	58	3xD1
24	10,12		**MTSH 06035 C10 24 UN**	6	3.50	3	10.6	58	2xD1
24		5/16, 3/8	**MTSH 08066 C17 24 UN**	8	6.60	3	17.0	64	2xD1
24		5/16, 3/8	**MTSH 08066 C24 24 UN**	8	6.60	3	24.0	64	3xD1
20	1/4		**MTSH 06047 C14 20 UN**	6	4.75	3	14.0	58	2xD1
20	1/4		**MTSH 06047 C19 20 UN**	6	4.75	3	19.0	58	3xD1
20		7/16	**MTSH 0808 C25 20 UN**	8	8.00	3	25.0	64	2xD1
18	5/16		**MTSH 0606 C17 18 UN**	6	6.00	3	17.0	58	2xD1
18	5/16		**MTSH 0606 C23 18 UN**	6	6.00	3	23.0	58	3xD1
18		5/8	**MTSH 1212 D35 18 UN**	12	12.00	4	35.0	84	2xD1
16	3/8		**MTSH 08067 C22 16 UN**	8	6.70	3	22.0	64	2xD1
16	3/8		**MTSH 08074 D30 16 UN**	8	7.40	4	30.2	64	3xD1
14	7/16		**MTSH 08077 C25 14 UN**	8	7.70	3	25.0	64	2xD1
13	1/2		**MTSH 10092 C27 13 UN**	10	9.20	3	27.5	73	2xD1
12	9/16		**MTSH 12105 C31 12 UN**	12	10.50	3	31.5	84	2xD1
11	5/8		**MTSH 12114 C34 11 UN**	12	11.40	3	34.5	84	2xD1
10	3/4		**MTSH 16144 D41 10 UN**	16	14.40	4	41.5	105	2xD1

Order example: MTSH 06047 C14 20 UN MT9

● First choice ○ Alternative

G (55°) BSW, BSP

Same Tool for Internal and External Thread

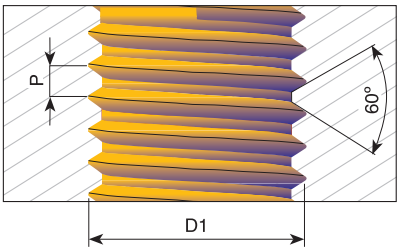

Left hand cutting
For CNC code use M04

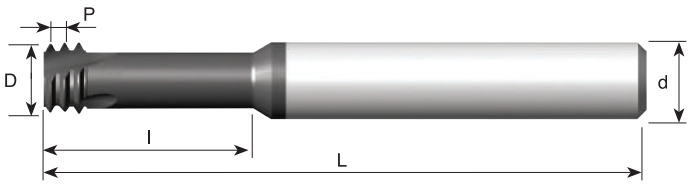

Grade	P	M	K	N	S	H
MT9	●	●	○	○	●	≤62 HRc

Pitch TPI	Standard	Ordering Code	d	D	No. of Flutes	l	L	Thread depth
28	G1/8	**MTSH 08078 C19 28 W**	8	7.8	3	19.5	64	2xD1
19	G1/4-3/8	**MTSH 1010 D30 19 W**	10	10.0	4	30.0	73	2xD1
14	G1/2-7/8	**MTSH 1212 D37 14 W**	12	12.0	4	37.0	84	2xD1
11	G≥1	**MTSH 1616 D44 11 W**	16	16.0	4	44.0	105	2xD1

MJ Tools for Internal Thread

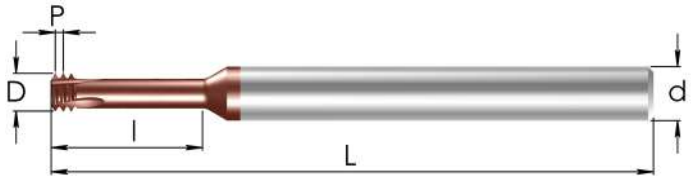

Grade	P	M	K	N	S	H
MT6	●	●	○	○	●	≤58 HRc

Pitch mm	D1	Ordering Code	d	D	No. of Flutes	l	L	Thread depth
0.5	MJ3	**MTSH 06024 C9 0.5 MJ**	6	2.40	3	9.5	58	3xD1
0.7	MJ4	**MTSH 06032 C12 0.7 MJ**	6	3.20	3	12.7	58	3xD1
0.8	MJ5	**MTSH 0604 D15 0.8 MJ**	6	4.00	4	15.8	58	3xD1
1.0	MJ6-MJ8	**MTSH 06048 D19 1.0 MJ**	6	4.80	4	19.0	58	3xD1
1.25	MJ8-MJ10	**MTSH 08064 D25 1.25 MJ**	8	6.40	4	25.3	64	3xD1
1.5	MJ10-MJ12	**MTSH 0808 D31 1.5 MJ**	8	8.00	4	31.5	64	3xD1
1.75	MJ12	**MTSH 10095 D25 1.75 MJ**	10	9.50	4	25.8	73	2xD1
2.0	MJ14-MJ20	**MTSH 1211 D30 2.0 MJ**	12	11.00	4	30.0	84	2xD1

UNJ Tools for Internal Thread

Grade	P	M	K	N	S	H
MT6	●	●	○	○	●	≤58 HRc

Pitch TPI	UNJC	UNJF	Ordering Code	d	D	No. of Flutes	l	L	Thread depth
56	2		**MTSH 06016 C7 56 UNJ**	6	1.65	3	7.0	58	3xD1
32	6		**MTSH 06025 C11 32 UNJ**	6	2.55	3	11.3	58	3xD1
32	8	10	**MTSH 06033 C13 32 UNJ**	6	3.30	3	13.3	58	3xD1
28		1/4	**MTSH 06052 D20 28 UNJ**	6	5.20	4	20.0	58	3xD1
24		5/16, 3/8	**MTSH 08067 D24 24 UNJ**	8	6.70	4	24.9	64	3xD1
20	1/4		**MTSH 06049 D20 20 UNJ**	6	4.90	4	20.3	58	3xD1
20		7/16	**MTSH 10092 D23 20 UNJ**	10	9.20	4	23.5	73	2xD1
18	5/16		**MTSH 0606 D17 18 UNJ**	6	6.00	4	17.3	58	2xD1
16	3/8		**MTSH 08074 D20 16 UNJ**	8	7.40	4	20.6	64	2xD1
14	7/16		**MTSH 10085 D24 14 UNJ**	10	8.5	4	24.0	73	2xD1
13	1/2		**MTSH 10098 D27 13 UNJ**	10	9.80	4	27.4	73	2xD1

Order example: MTSH 10095 D25 1.75 MJ MT6

● First choice ○ Alternative

FSH
ISO Tools for Internal Thread

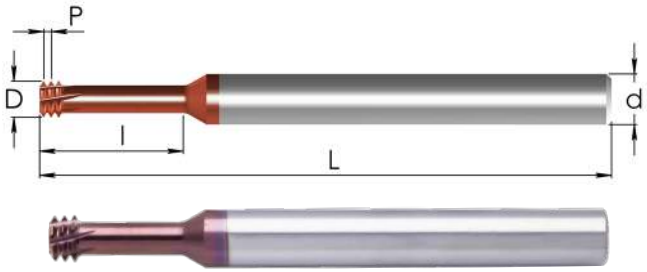

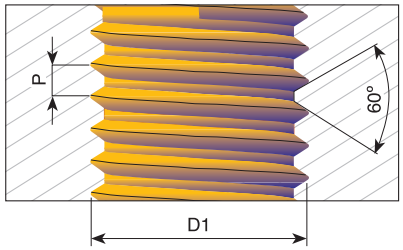

Left hand cutting
For CNC code use M04

Grade	P	M	K	N	S	H
MT3	●	○	○	○	●	≤65 HRc

Pitch mm	M Coarse	M Fine	Ordering Code	d	D	No. of Flutes	l	L	Thread depth
0.45	M2.5		**FSH 0602 E5 0.45 ISO**	6	1.95	5	5.5	58	2xD1
0.45	M2.5		**FSH 0602 E8 0.45 ISO**	6	1.95	5	8.0	58	3xD1
0.5	M3	M4,M5	**FSH 06024 E6 0.5 ISO**	6	2.40	5	6.5	58	2xD1
0.5	M3	M4,M5	**FSH 06024 E9 0.5 ISO**	6	2.40	5	9.5	58	3xD1
0.7	M4		**FSH 06032 E8 0.7 ISO**	6	3.20	5	8.7	58	2xD1
0.7	M4		**FSH 06032 E12 0.7 ISO**	6	3.20	5	12.7	58	3xD1
0.8	M5		**FSH 0604 E10 0.8 ISO**	6	4.00	5	10.8	58	2xD1
0.8	M5		**FSH 0604 E15 0.8 ISO**	6	4.00	5	15.8	58	3xD1
1.0	M6	M8	**FSH 06048 F13 1.0 ISO**	6	4.80	6	13.0	58	2xD1
1.0	M6	M8	**FSH 06048 F19 1.0 ISO**	6	4.80	6	19.0	58	3xD1
1.25	M8	M10,M12	**FSH 08064 G17 1.25 ISO**	8	6.40	7	17.3	64	2xD1
1.25	M8	M10,M12	**FSH 08064 G25 1.25 ISO**	8	6.40	7	25.3	64	3xD1

Order example: FSH 0604 E10 0.8 ISO MT3

UN Tools for Internal Thread

Grade	P	M	K	N	S	H
MT3	●	○	○	○	●	≤65 HRc

Pitch TPI	UNC	UNF	Ordering Code	d	D	No. of Flutes	l	L	Thread depth
40	4		**FSH 06021 D6 40 UN**	6	2.10	4	6.3	58	2xD1
40	4		**FSH 06021 D9 40 UN**	6	2.10	4	9.2	58	3xD1
40	5	6	**FSH 06024 D7 40 UN**	6	2.45	4	7.0	58	2xD1
40	5	6	**FSH 06024 D10 40 UN**	6	2.45	4	10.2	58	3xD1
32	6		**FSH 06025 D7 32 UN**	6	2.55	4	7.8	58	2xD1
32	6		**FSH 06025 D11 32 UN**	6	2.55	4	11.3	58	3xD1
32	8		**FSH 06032 D9 32 UN**	6	3.20	4	9.1	58	2xD1
32	8		**FSH 06032 D13 32 UN**	6	3.20	4	13.3	58	3xD1
32		10	**FSH 06038 E10 32 UN**	6	3.80	5	10.5	58	2xD1
32		10	**FSH 06038 E15 32 UN**	6	3.80	5	15.3	58	3xD1
28		1/4	**FSH 06052 F13 28 UN**	6	5.20	6	13.6	58	2xD1
28		1/4	**FSH 06052 F20 28 UN**	6	5.20	6	20.0	58	3xD1
24		5/16, 3/8	**FSH 08066 F16 24 UN**	8	6.60	6	16.9	64	2xD1
24		5/16, 3/8	**FSH 08066 F24 24 UN**	8	6.60	6	24.9	64	3xD1
20	1/4		**FSH 06048 E14 20 UN**	6	4.80	5	14.0	58	2xD1
20	1/4		**FSH 06048 E20 20 UN**	6	4.80	5	20.3	58	3xD1

Order example: FSH 08066 F24 24 UN MT3

● First choice ○ Alternative

MTH
ISO Tools for Internal Thread

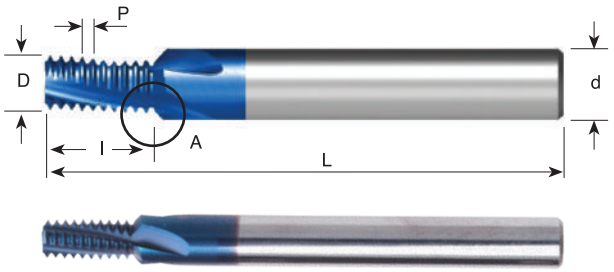

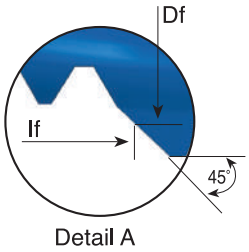

Grade	P	M	K	N	S	H
MT11	●	○	●	○	●	≤62 HRc

Pitch mm	M Coarse	M Fine	Ordering Code	d	D	Df	No. of Flutes	l	lf	L
0.5	M3	Ø ≥ 4	MTH 06024 C5 0.5 ISO	6	2.4	3.6	3	5.3	5.9	58
0.7	M4	Ø ≥ 5	MTH 06031 C7 0.7 ISO	6	3.1	4.3	3	7.4	8.0	58
0.8	M5	Ø ≥ 6	MTH 0604 C9 0.8 ISO	6	4.0	5.2	3	9.2	9.8	58
1.0	M6	Ø ≥ 7	MTH 08048 D10 1.0 ISO	8	4.8	6.4	4	10.5	11.3	64
1.0		Ø ≥ 9	MTH 0806 D13 1.0 ISO	8	6.0	7.6	4	13.5	14.3	64
1.0		Ø ≥ 10	MTH 1008 D16 1.0 ISO	10	8.0	9.6	4	16.5	17.3	73
1.25	M8	Ø ≥ 10	MTH 0806 D14 1.25 ISO	8	6.0	7.6	4	14.4	15.2	64
1.5	M10	Ø ≥ 12	MTH 1008 D17 1.5 ISO	10	8.0	9.8	4	17.3	18.2	73
1.5		Ø ≥ 14	MTH 1210 D21 1.5 ISO	12	10.0	11.8	4	21.8	22.7	84
1.75	M12	Ø ≥ 12	MTH 12095 D20 1.75 ISO	12	9.5	11.5	4	20.1	21.1	84

Order example: MTH 08048 D10 1.0 ISO MT11

UN
Tools for Internal Thread



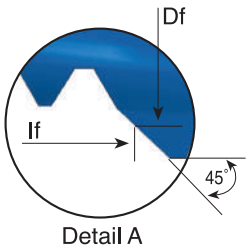

Grade	P	M	K	N	S	H
MT11	●	○	●	○	●	≤62 HRc

Pitch TPI	UNC	UNF	UNEF	Ordering Code	d	D	Df	No. of Flutes	l	lf	L
40	5	6		MTH 06025 C6 40 UN	6	2.5	3.7	3	6.0	6.6	58
32	6			MTH 06026 C5 32 UN	6	2.6	3.8	3	5.9	6.5	58
32	8			MTH 06032 C7 32 UN	6	3.2	4.4	3	7.5	8.1	58
32		10	12	MTH 06038 C9 32 UN	6	3.8	5.0	3	9.1	9.7	58
28		1/4		MTH 08052 D11 28 UN	8	5.2	6.8	4	11.3	12.1	64
28			7/16, 1/2	MTH 12096 D20 28 UN	12	9.6	11.2	4	20.4	21.2	84
24		5/16, 3/8	9/16, 5/8, 11/16	MTH 08066 D14 24 UN	8	6.6	8.0	4	14.3	15.0	64
20	1/4			MTH 06048 C12 20 UN	6	4.8	6.0	3	12.1	12.7	58
20		7/16, 1/2	3/4, 1	MTH 12092 D21 20 UN	12	9.2	10.8	4	21.0	21.8	84
18	5/16	9/16, 5/8	11/16	MTH 08057 C14 18 UN	8	5.7	7.5	3	14.8	15.7	64
16	3/8	3/4		MTH 10074 C16 16 UN	10	7.4	9.2	3	16.7	17.6	73
14	7/16	7/8		MTH 10085 D20 14 UN	10	8.5	9.9	4	20.9	21.6	73
13	1/2			MTH 12094 D22 13 UN	12	9.4	11.4	4	22.5	23.5	84

Order example: MTH 06048 C12 20 UN MT11

● First choice ○ Alternative

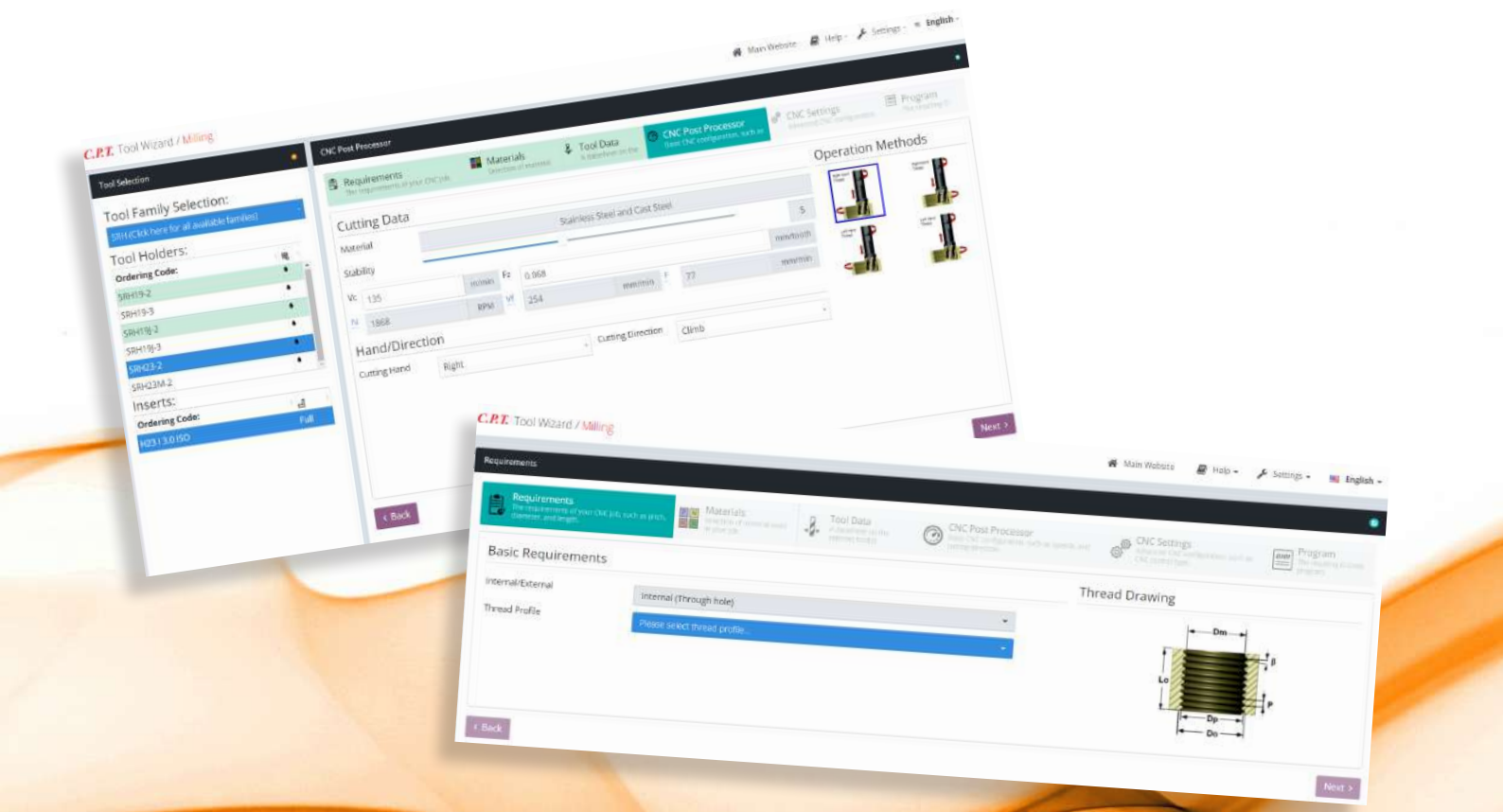

Contents:	Page:
Conversion of Cutting Speed to Rotational Speed	2
Tool Selection	3
CPT Mill-Thread catalog and CNC programming Software	4
Example of Thread Milling CNC Program for Internal Threading	4
Mill-Thread Inserts Speed and Feed Selection	5
Cutting Data Slim MT Type	6
Spiral Mill-Thread Inserts Speed and Feed Selection	7
Spiral Finish Speed Selection	7
Cutting Data D-Thread type	8
Cutting Data CMT type	9-11

Contents:	Page:
Mill-Thread Solid Carbide Grades, Speed and Feed Selection	
MT, MTB, MTZ, EMT types	12
Cutting Data MTQ type	13
FMT - Fast MT type	14
Cutting Data FMT type	15
Cutting Data AMT type	16
Cutting Data Mini Mill-Thread MTS, MTI & FMTI types	17-18
Cutting Data MTSB type	18
Cutting Data DMT type	19
Cutting Data DMTH type	19
Cutting Data MT Drill - MTD type	20
MT drill working cycle	20
Cutting Data Mini Mill-Thread MTSH and FSH type	21
Cutting Data MTH type	22

Conversion of Cutting Speed to Rotational Speed

Conversion of selected cutting speed to rotational speed is calculated by the following formula:

$$N = \frac{V \times 1000}{\pi \times D} = \frac{120 \times 1000}{3.14 \times 30} = 1274 \text{ RPM}$$

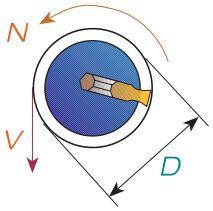

Example: *V=120 m/min*
D=30 mm

D=Cutting diameter

Internal Thread

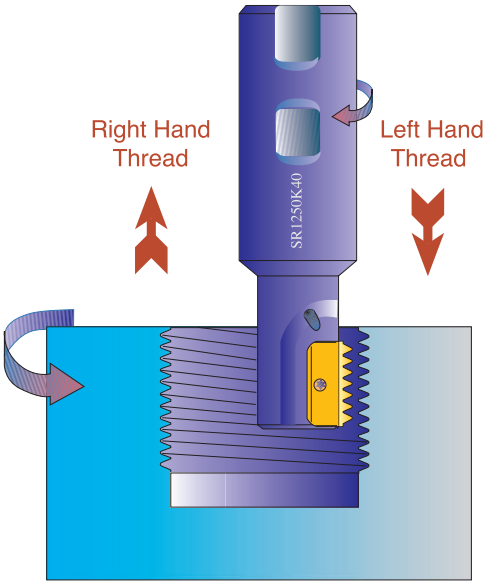

External Thread

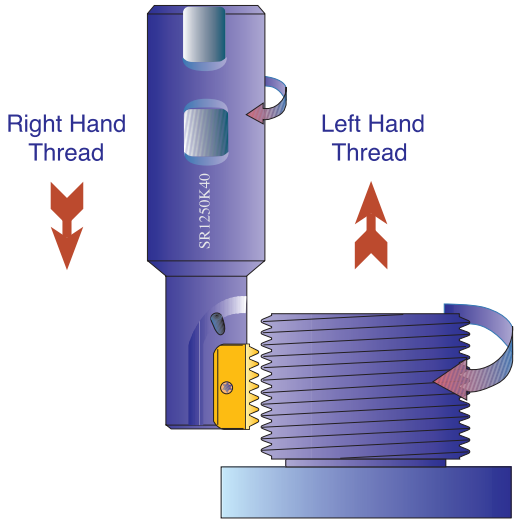

Tool Selection

For indexable and solid carbide Mill Threads

The following chart provides a fairly accurate visual selection tool for Internal Threading.
The chart is suitable for the following thread forms: ISO, UN, WHIT, NPT, NPTF, BSPT and PG.

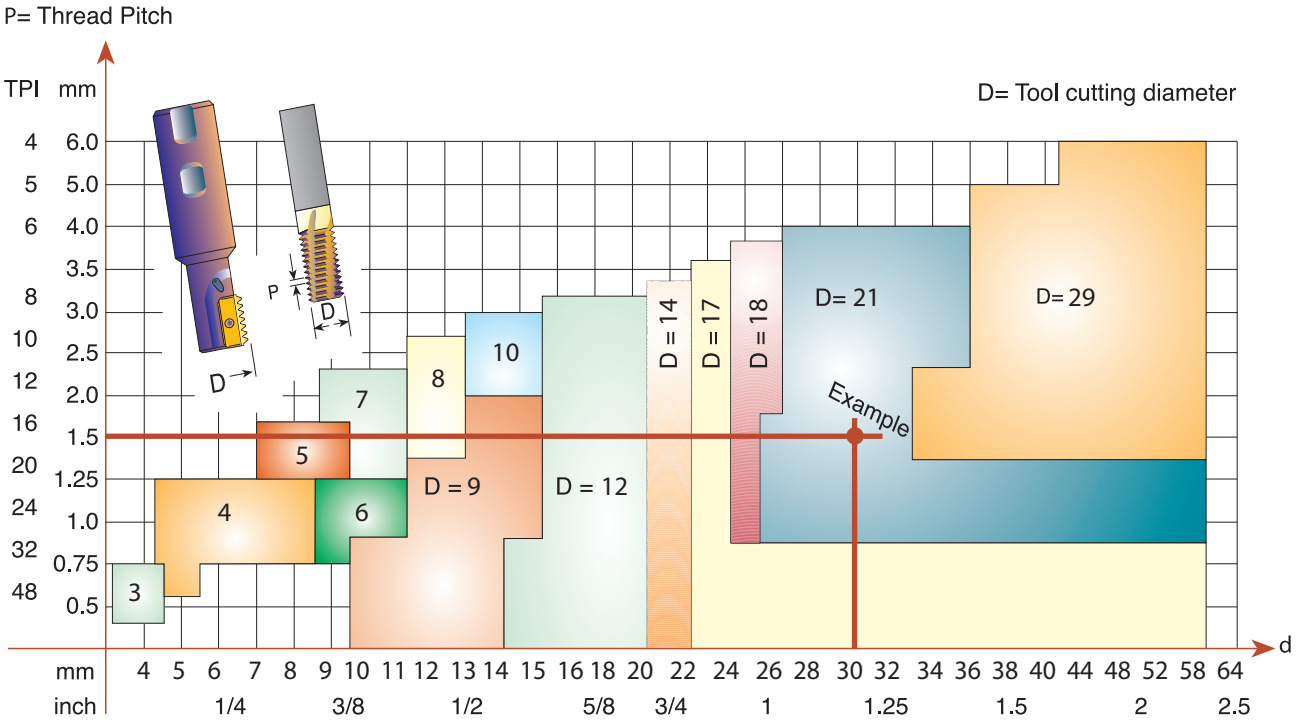

Any tool with a small cutting diameter can produce larger diameter threads.
Example: Internal thread M30 x 1.5:
Find a Milling Tool to produce d=30 Internal
right hand ISO thread with a thread pitch P=1.5 mm.
As can be seen from the chart above, the two red lines
intersect at a selected tool with a cutting diameter of D=21 mm

Chosen toolholder: SR0021 H21
Insert: 21 I 1.5 ISO MT7

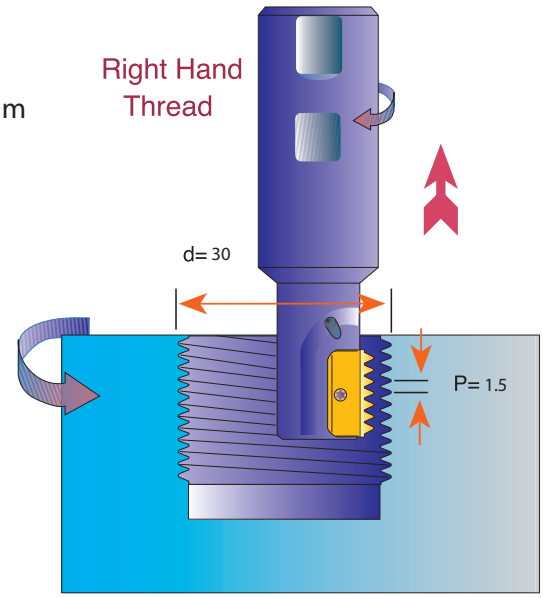

If you need assistance, please call your local distributor and ask for help in selecting the appropriate tool as well as for a CNC program to suit your CNC milling machine.

CPT Mill-Thread catalog and CNC programming Software

This software is provided by CPT to assist you, the thread milling user, to select and apply the correct tool to machine threads on CNC machining centers. The program will find tools and inserts which are suitable for your application, calculate cutting data and generate a CNC program for a variety of controls.

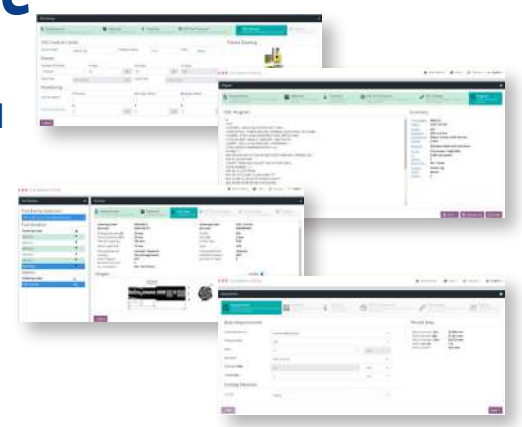

The software is available at our website:

www.cpt-gewindewerkzeuge.de/home

Example of Thread Milling CNC Program for Internal Threading

Right hand thread (climb milling) from bottom up.

Program is based on tool center.
This method of programming needs no tool radius compensation value other than an offset for wear.

$$A = \frac{D_0 - D}{2}$$

A = Radius of tool path
D_0 = Major thread dia.
D = Cutting dia.

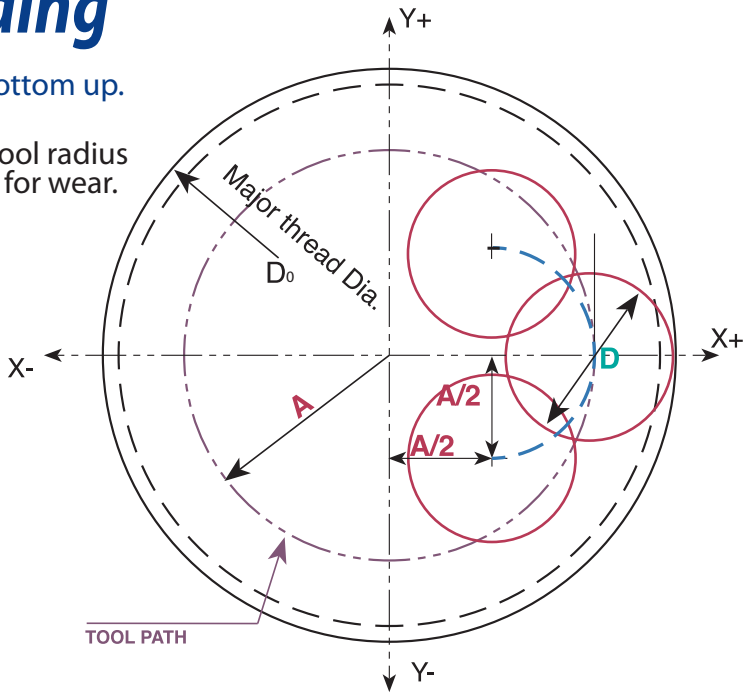

General Program

G90 G00 G54 G40 G17 G94X0 Y0 S---M03
G43 H1 Z50.000 M08
G90 G01 Z- (TO THREAD DEPTH) F5000
G91 G41 D1 X(A/2) Y-(A/2) Z0 F---
G03 X(A/2) Y(A/2) Z(1/8 PITCH) I0 J(A/2) F---
G03 X0 Y0 Z(PITCH) I-(A) J0
G03 X-(A/2) Y(A/2) Z(1/8 PITCH) I-(A/2) J0
G01 G40 X-(A/2) Y-(A/2) Z0 F5000
G90 G00 Z50.000

Internal Thread

EXAMPLE : M 32 X 2.0 (Thread depth 18 mm)
TOOLHOLDER : SR0021 H20 (Cutting dia. 21 mm)
INSERT: 21 I 2.0 ISO
A = (32-21)/2 = 5.5

G90 G00 G54 G40 G17 G94 X0.000 Y0.000 S2986 M03
G43 H1 Z50.000 M08
G90 G01 Z-18.250 F5000
G91 G41 D1 X2.750 Y-2.750 Z0.000 F215
G03 X2.750 Y2.750 Z0.250 I0.000 J2.750 F74
G03 X0.000 Y0.000 Z2.000 I-5.500 J0.000
G03 X-2.750 Y2.750 Z0.250 I-2.750 J0.000
G01 G40 X-2.750 Y-2.750 Z0.000 F5000
G90 G00 Z50.000

Mill-Thread Inserts Speed and Feed Selection

MT7 Sub-Micron Grade with Titanium Aluminum Nitride multi-layer coating (ISO K10 - K20). This is a general purpose grade, which can be used with all materials; it should be run at medium to high cutting speeds.

ISO	Materials	Cutting Speed m/min MT7
P	Low and Medium Carbon Steels	115 - 280
	High Carbon Steels	130 - 200
	Alloy Steels, Treated Steels	105 - 180
M	Stainless Steels	130 - 190
	Cast Steels	150 - 190
K	Cast Iron	80 - 70
N	Non-Ferrous & Aluminum	180 - 340
	Synthetics, Duroplastics, Thermoplastics	115 - 460
S	Nickel Alloys, Titanium Alloys	25 - 90

Recommended FEED RATE: 0.05 - 0.15 mm

Cutting Data

Slim MT type

MT17 Advanced New Sub-Micron carbide grade with multi-layer PVD coating, provides high performance in all machining conditions. The new grade ensures high abrasive wear resistance, machining wide range of materials including steels, tough and difficult materials and high alloyed steels.

ISO	Material	Conditions	Cutting Conditions	
			Cutting Speed (m/min)	Feed Rate (mm/tooth)
P	Non-Alloy Steel and Cast Steel, Free Cutting Steel	Annealed < 0.25% C Annealed ≥ 0.25% C Annealed ≥ 0.55% C Quenched & Tempered < 0.55% C Quenched & Tempered ≥ 0.55% C	110-220 100-210 90-150 70-140 55-70	(0.055 * D) / 22
	Low Alloy Steel and Cast Steel (less than 5% alloying elements	Annealed Quenched & Tempered	60-110 60-90	(0.055 * D) / 22
	High Alloy Steel, Cast Steel, and Tool Steel	Annealed	55-90	
		Quenched & Tempered	45-80	
M	Stainless Steel and Cast Steel	Ferritic Martensitic Austenitic	90-200 80-160 60-110	(0.055 * D) / 22
		High alloy Austenitic & Duplex	40-70	(0.045 * D) / 22
K	Cast Iron Nodular (GGG)	Ferritic	90-125	(0.055 * D) / 22
		Pearlitic	90-110	
	Grey Cast Iron (GG)	Ferritic	110-145	
		Pearlitic	80-125	
	Malleable Cast Iron	Ferritic	110-125	
		Pearlitic	80-120	
N	Aluminum-Wrought Alloy	Not Cureable	135-350	(0.05 * D) / 22
		Cured	100-270	
	Aluminum-Cast, Alloyed	Not Cureable ≤ 12% Si 90-270 Cured High Temperature > 12% Si	90-270 90-225 90-180	
	Copper Alloys	Free Cutting > 1% Pb Brass Electrolytic Copper	70-225 70-180 70-270	
	Non Metalic	Duroplastics, Fiber Plastics Hard Rubber	70-270 70-270	
S	High Temperature/Super Alloys (Fe based)	Annealed Cured	30-50	(0.038 * D) / 22
	High Temperature/Super Alloys (Ni or Co based	Annealed	25-45	
		Cured Cast		
	Titanium Alloys	Alpha + Beta Alloys Cured	30-40	

D= Toolholder cutting diameter.

Spiral Mill-Thread Inserts Speed and Feed Selection

MT7 Sub-Micron Grade with Titanium Aluminum Nitride multi-layer coating (ISO K10 - K20). This is a general purpose grade, which can be used with all materials; it should be run at medium to high cutting speeds.

ISO	Materials	Cutting Speed m/min MT7
P	Low and Medium Carbon Steels	145 - 360
	High Carbon Steels	165 - 255
	Alloy Steels, Treated Steels	135 - 230
M	Stainless Steels	165 - 245
	Cast Steels	190 - 245
K	Cast Iron	100 - 220
N	Non-Ferrous & Aluminum	230 - 440
	Synthetics, Duroplastics, Thermoplastics	145 - 590
S	Nickel Alloys, Titanium Alloys	30 - 115

Recommended FEED RATE: ***0.05 - 0.15 mm***

As you may note, cutting speed is shown in range terms. In most standard cases choosing a speed in the middle of the range would be a good choice for a start.

For hard metals reduce cutting speed.

Spiral Finish Speed Selection

MT7 Sub-Micron Grade with Titanium Aluminum Nitride multi-layer coating (ISO K10 - K20). This is a general purpose grade, which can be used with all materials; it should be run at medium to high cutting speeds.

ISO	Materials	Cutting Speed (m/min) MT7
P	Low and Medium Carbon Steels	200 - 330
	High Carbon Steels	170 - 235
	Alloy Steels, Treated Steels	100 - 195
M	Stainless Steels	180 - 230
	Cast Steels	180 - 230
K	Cast Iron	200 - 350
N	Non-Ferrous and Aluminum	500 - 1100
	Synthetics, Duroplastics, Thermoplastics	400 - 1500
S	Nickel Alloys, Titanium Alloys	30 - 55

Cutting Data

D-Thread type

MT7 Sub-Micron Grade with Titanium Aluminum Nitride multi-layer coating (ISO K10 - K20). This is a general purpose grade, which can be used with all materials; it should be run at medium to high cutting speeds.

ISO	Materials	Cutting Speed (m/min)
P	Low and Medium Carbon Steels <0.55%C	100 - 205
	High Carbon Steels ≥0.55%C	100 - 180
	Alloy Steels, Treated Steels	100 - 140
M	Stainless Steels - Free Cutting	85 - 125
	Stainless Steels - Austenitic	80 - 115
	Cast Steels	115 - 155
K	Cast Iron	75 - 145
N	Aluminum ≤12%Si, Copper	150 - 300
	Aluminum >12% Si	150 - 300
	Synthetics, Duroplastics, Thermoplastics	100 - 350
S	Nickel Alloys, Titanium Alloys	45 - 95

Recommended FEED RATE: 0.07 - 0.15 mm

Cutting Data

CMT type

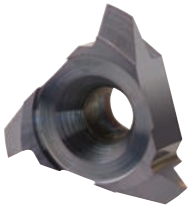

MT7 Sub-Micron Grade with Titanium Aluminum Nitride multi-layer coating (ISO K10 - K20). This is a general purpose grade, which can be used with all materials; it should be run at medium to high cutting speeds.

ISO	Materials	Cutting Speed m/min	Feed mm/tooth Cutting Diameter=D			
			Ø10	Ø12	Ø18	Ø25
P	Low and Medium Carbon Steels <0.55%C	60 - 120	0.16	0.17	0.20	0.22
	High Carbon Steels ≥0.55%C	60 - 90	0.14	0.16	0.20	0.22
	Alloy Steels, Treated Steels	50 - 80	0.10	0.12	0.16	0.18
M	Stainless Steels - Free Cutting	70 - 100	0.10	0.11	0.15	0.17
	Stainless Steels - Austenitic	60 - 90	0.10	0.11	0.15	0.17
	Cast Steels	70 - 90	0.10	0.12	0.16	0.18
K	Cast Iron	40 - 80	0.16	0.17	0.20	0.22
N	Aluminum ≤12%Si, Copper	100 - 200	0.16	0.17	0.20	0.22
	Aluminum >12% Si	60 - 140	0.10	0.11	0.16	0.18
	Synthetics, Duroplastics, Thermoplastics	50 - 200	0.19	0.19	0.22	0.24
S	Nickel Alloys, Titanium Alloys	20 - 40	0.07	0.07	0.10	0.12
H	Hardened Steel 45 - 50HRc	60 - 70	0.09	0.09	0.13	0.15
	Hardened Steel 50 - 55HRc	50 - 60	0.08	0.08	0.12	0.14

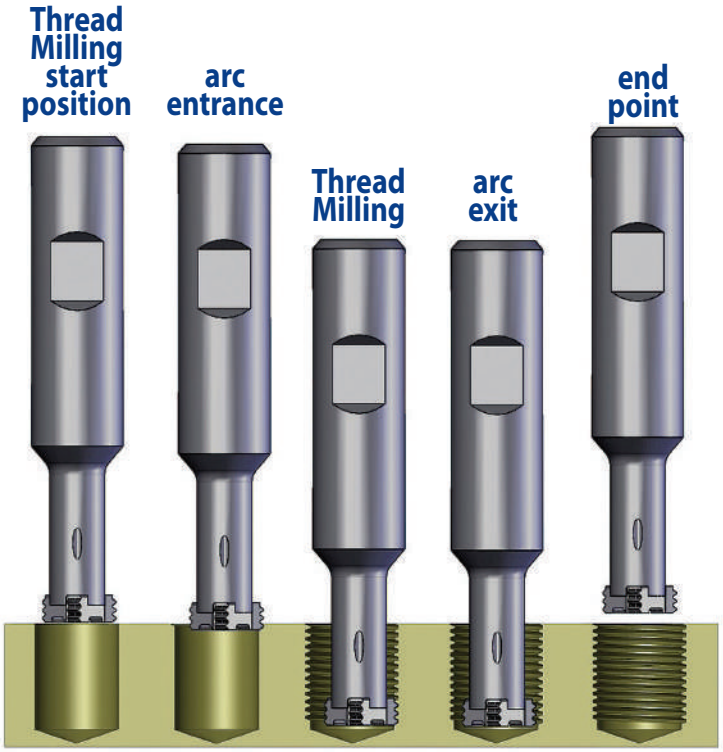

Cutting Data

CMT Spiral Multi Flute Inserts



Carbide grade - MT8:

Sub-Micron Grade with Aluminum Titanium Nitride (AlTiN) multi-layer coating (ISO K10-K20). Extremely high heat resistant and smooth cutting operation, for high performance, and normal machining conditions. General purpose for all materials.

ISO Standard	Material	Cutting Speed m/min	Feed mm/tooth Cutting Diameter = D
			Ø16-Ø35
P	Low and Medium Carbon Steels <0.55%C	60 - 120	0.14 - 0.24
	High Carbon Steels ≥0.55%C	60 - 90	0.12 - 0.24
	Alloy Steels,Treated Steels	50 - 80	0.08 - 0.20
M	Stainless Steel-Free Cutting	70 - 100	0.08 - 0.19
	Stainless Steel-Austenitic	60 - 90	0.08 - 0.19
	Cast Steels	70 - 90	0.08 - 0.20
K	Cast Iron	40 - 80	0.14 - 0.24
N	Aluminum ≤12%Si, Copper	100 - 200	0.14 - 0.26
	Aluminum >12%Si	60 - 140	0.08 - 0.22
	Synthetics, Duroplastics, Thermoplastics	50 - 200	0.17 - 0.28
S	Nickel Alloys, Titanium Alloys.	20 - 40	0.05 - 0.14
H	Hardened Steel, 45-50HRc	60 - 70	0.07 - 0.17
	Hardened Steel, 51-55HRc	50 - 60	0.06 - 0.16

Cutting Data

CMT Milling cutter



MT7 Sub-Micron Grade with Titanium Aluminum Nitride multi-layer coating (ISO K10 - K20). This is a general purpose grade, which can be used with all materials; it should be run at medium to high cutting speeds.

ISO Standard	Material	Cutting Speed m/min	Feed mm/tooth
P	Low and Medium Carbon Steels <0.55%C	60 - 120	0.05 - 0.15
	High Carbon Steels ≥0.55%C	60 - 90	0.05 - 0.10
	Alloy Steels, Treated Steels	50 - 80	0.05 - 0.10
M	Stainless Steel-Free Cutting	70 - 100	0.04 - 0.13
	Stainless Steel-Austenitic	60 - 90	0.04 - 0.10
	Cast Steels	70 - 90	0.04 - 0.13
K	Cast Iron	40 - 80	0.05 - 0.15
N	Aluminum ≤12%Si, Copper	100 - 200	0.05 - 0.25
	Aluminum >12%Si	60 - 140	0.03 - 0.10
	Synthetics, Duroplastics, Thermoplastics	50 - 200	0.05 - 0.25
S	Nickel alloys, Titanium Alloys.	20 - 40	0.03 - 0.10
H	Hardened Steel, ≤ 45 HRc	60 - 70	0.03 - 0.10

Mill-Thread Solid Carbide Grades, Speed and Feed Selection

MT type

MT7 Sub-Micron Grade with Titanium Aluminum Nitride multi-layer coating (ISO K10 - K20). This is a general purpose grade, which can be used with all materials; it should be run at medium to high cutting speeds.

ISO	Materials	Cutting Speed m/min	Feed mm/tooth Cutting Diameter=D										
			Ø2	Ø3	Ø4	Ø6	Ø8	Ø10	Ø12	Ø14	Ø16	Ø20	Ø25
P	Low and Medium Carbon Steels <0.55%C	90 - 200	0.03	0.04	0.04	0.06	0.07	0.08	0.09	0.11	0.12	0.15	0.18
	High Carbon Steels ≥0.55%C Alloy Steels, Treated Steels	100 - 145	0.02	0.03	0.03	0.05	0.06	0.07	0.08	0.09	0.10	0.12	0.15
M	Stainless Steels - Free Cutting	55 - 130	0.02	0.03	0.03	0.04	0.05	0.06	0.06	0.07	0.08	0.09	0.11
	Stainless Steels - Austenitic	55 - 100	0.02	0.02	0.03	0.03	0.04	0.05	0.05	0.06	0.07	0.08	0.10
	Cast Steels	120 - 135	0.02	0.02	0.03	0.03	0.04	0.05	0.05	0.06	0.07	0.08	0.10
K	Cast Iron	65 - 120	0.03	0.04	0.04	0.06	0.07	0.08	0.09	0.11	0.12	0.15	0.18
N	Aluminum ≤12%Si, Copper	135 - 280	0.03	0.04	0.04	0.06	0.07	0.08	0.09	0.11	0.12	0.15	0.18
	Aluminum >12% Si	90 - 200	0.02	0.02	0.03	0.03	0.04	0.05	0.05	0.06	0.07	0.08	0.10
	Synthetics, Duroplastics, Thermoplastics	90 - 320	0.05	0.06	0.07	0.08	0.10	0.11	0.12	0.14	0.15	0.18	0.22
S	Nickel Alloys, Titanium Alloys	20 - 70	0.02	0.02	0.02	0.03	0.03	0.03	0.03	0.04	0.04	0.04	0.05

For cutters with long cutting length reduce feed rate by 40%

MTB, MTZ, EMT types

ISO	Materials	Cutting Speed m/min	Feed mm/tooth Cutting Diameter=D										
			Ø2	Ø3	Ø4	Ø6	Ø8	Ø10	Ø12	Ø14	Ø16	Ø20	Ø25
P	Low and Medium Carbon Steels <0.55%C	100 - 250	0.03	0.04	0.04	0.06	0.07	0.08	0.09	0.11	0.12	0.15	0.18
	High Carbon Steels ≥0.55%C	110 - 180	0.02	0.03	0.03	0.05	0.06	0.07	0.08	0.09	0.10	0.12	0.15
	Alloy Steels, Treated Steels	90 - 160	0.02	0.02	0.03	0.03	0.04	0.05	0.05	0.06	0.07	0.08	0.10
M	Stainless Steels - Free Cutting	60 - 160	0.02	0.03	0.03	0.04	0.05	0.06	0.06	0.07	0.08	0.09	0.11
	Stainless Steels - Austenitic	60 - 120	0.02	0.02	0.03	0.03	0.04	0.05	0.05	0.06	0.07	0.08	0.10
	Cast Steels	130 - 170	0.02	0.02	0.03	0.03	0.04	0.05	0.05	0.06	0.07	0.08	0.10
K	Cast Iron	70 - 150	0.03	0.04	0.04	0.06	0.07	0.08	0.09	0.11	0.12	0.15	0.18
N	Aluminum ≤12%Si, Copper	150 - 350	0.03	0.04	0.04	0.06	0.07	0.08	0.09	0.11	0.12	0.15	0.18
	Aluminum >12% Si	100 - 250	0.02	0.02	0.03	0.03	0.04	0.05	0.05	0.06	0.07	0.08	0.10
	Synthetics, Duroplastics, Thermoplastics	100 - 400	0.05	0.06	0.07	0.08	0.10	0.11	0.12	0.13	0.15	0.18	0.22
S	Nickel Alloys, Titanium Alloys	20 - 80	0.02	0.02	0.02	0.03	0.03	0.03	0.03	0.04	0.04	0.04	0.05

For cutters with long cutting length reduce feed rate by 40%

MTQ type

Thread mills with relieved neck and internal coolant for milling medium and large threads on relatively deep work pieces.

- To produce medium and large threads on relatively deep work pieces.
- To use overhang according to the application.
- To perform deep threads at the bottom of the application.

Advantages

- Provides high rigidity and stability (anti-vibration).
- Accomplishes deep threads in one pass.
- Relatively low cutting forces due to short cutting length.
- Threads length up to 3D.

Cutting Data

MT7 Sub-Micron Grade with Titanium Aluminum Nitride multi-layer coating (ISO K10 - K20). This is a general purpose grade, which can be used with all materials; it should be run at medium to high cutting speeds.

ISO	Materials	Cutting Speed m/min	Feed mm/tooth Cutting Diameter=D					
			Ø10	Ø12	Ø14	Ø16	Ø20	Ø25
P	Low and Medium Carbon Steels < 0.55%C	100 - 250	0.06	0.07	0.07	0.08	0.10	0.12
	High Carbon Steels ≥ 0.55%C	110 - 180	0.05	0.05	0.06	0.07	0.09	0.10
	Alloy Steels, Treated Steels	90 - 160	0.03	0.04	0.04	0.05	0.06	0.07
M	Stainless Steels - Free Cutting	60 - 160	0.04	0.04	0.05	0.06	0.06	0.08
	Stainless Steels - Austenitic	60 - 120	0.04	0.04	0.04	0.05	0.06	0.07
	Cast Steels	130 - 170	0.03	0.04	0.04	0.05	0.06	0.07
K	Cast Iron	70 - 150	0.06	0.07	0.07	0.08	0.10	0.12
N	Aluminum ≤ 12%Si, Copper	150 - 350	0.06	0.07	0.07	0.08	0.10	0.12
	Aluminum > 12% Si	100 - 250	0.03	0.04	0.04	0.05	0.06	0.07
	Synthetics, Duroplastics, Thermoplastics	100 - 400	0.08	0.09	0.10	0.11	0.13	0.15
S	Nickel Alloys, Titanium Alloys	20 - 80	0.02	0.02	0.02	0.03	0.03	0.03

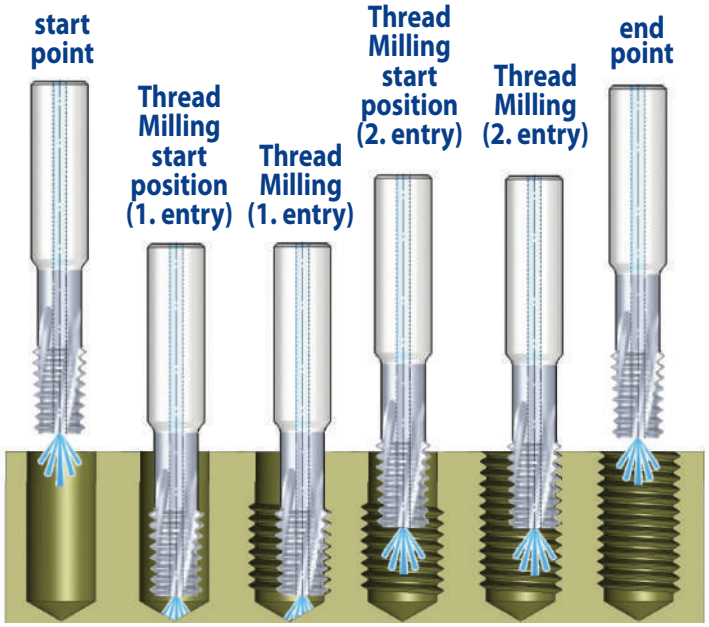

FMT - Fast MT type

- **CPT has designed a unique line of solid carbide thread milling tools FMT for increased productivity and high performance.**
- **Large number of flutes enables to achieve significant shorter machining time.**

FMT vs. Taps

Features	FMT	Taps
Thread up to bottom at blind hole	Possible	Not possible
Machining load	Very low	High
Thread surface quality	High	Medium
Process reliability	Very reliable, especially for expensive work pieces	Medium
Thread geometry	Very accurate	Medium
Cycle time	Same or faster than tap	Fast

Case Study

Application
Internal right hand thread: M6x1.0
Thread length: 10 mm, Blind hole
Bore size: Ø 5 mm
Chamfer: 0.9 mm

Work piece material
Steel SAE 4340

Cutter description
FMT08048F10 1.0 ISO - with internal coolant
Shank diameter: Ø8 mm
Cutting diameter: Ø4.8 mm
Number of flutes: 6
Cutting length: 10.5 mm
Total length: 64 mm

Cutting conditions
Cutting speed: 130 m/min Feed: 0.016 mm/tooth

Machine
Mori Seiki NV5000 Coolant: emulsion 5%

Results
Tool life : 2,170 threads
Cycle time: 1.5 sec

Cutting Data

FMT - Fast MT type

MT8 Sub Micron grade with advanced PVD triple coating (ISO K10-K20).
Extremely high heat resistant and smooth cutting operation, for high performance and normal machining conditions. General purpose for all materials.

ISO Standard	Materials	Cutting Speed m/min	Feed mm/tooth Cutting Diameter = D				
			Ø5	Ø6	Ø8	Ø10	Ø12
P	Low and Medium Carbon Steels < 0.55%C	100 - 250	0.03	0.06	0.07	0.08	0.09
	High Carbon Steels ≥ 0.55%C	110 - 180	0.03	0.05	0.06	0.07	0.08
	Alloy Steels, Treated Steels	90 - 60	0.02	0.03	0.04	0.05	0.05
M	Stainless Steel - Free Cutting	60 - 160	0.03	0.04	0.05	0.06	0.06
	Stainless Steel - Austenitic	60 - 120	0.01	0.03	0.04	0.05	0.05
	Cast Steels	130 - 170	0.02	0.03	0.04	0.05	0.05
K	Cast Iron	70 - 150	0.04	0.06	0.07	0.08	0.09
N	Aluminum ≤ 12%Si, Copper	150 - 350	0.04	0.06	0.07	0.08	0.09
	Aluminum > 12%Si	100 - 250	0.03	0.03	0.04	0.05	0.05
	Synthetics, Duroplastics, Thermoplastics	100 - 400	0.06	0.08	0.10	0.11	0.12
S	Nickel Alloys, Titanium Alloys.	20 - 80	0.02	0.03	0.03	0.03	0.03
H	Hardened Steel, 45-50HRc	60 - 70	0.02	0.03	0.03	0.03	0.03

AMT Solid Carbide Thread Mills for Aluminum Machining

Solid carbide thread mills for High-speed Aluminum machining.
High-speed aluminum machining requires tools that minimize the tendency of Aluminum to stick to the tool cutting edges, provides high surface finish, ensuring efficient chip evacuation and sufficient strength of the cutting edge to absorb the cutting forces.

Features

- Optimized carbide grade for Aluminum, cast iron and stainless steels
- Cylindrical shank (Weldon shank - upon request)
- With internal coolant bore
- Uncoated, smooth cutting edge
- High thread surface quality
- Same tool for right hand or left hand internal threads
- Additional items with cutting chamfer

Cutting Data

AMT

K20 Uncoated Sub- Micron carbide grade for Aluminum and non- ferrous materials, Stainless Steels and Titanium.

ISO Standard	Materials	Cutting Speed m/min	Feed mm/tooth Cutting Diameter = D		
			D ≤ 4	4 < D < 9	D ≥ 9
P	Low & Medium Carbon Steels < 0.55%C	50-140	0.005-0.03	0.01-0.05	0.02-0.10
	High Carbon Steels ≥0.55%C	60-130	0.005-0.02	0.01-0.04	0.02-0.09
	Alloy Steels, Treated Steels				
M	Stainless Steel-Free Cutting	40-120	0.005-0.02	0.01-0.04	0.02-0.09
	Stainless Steel-Austenitic				
	Cast Steels	70-120	0.005-0.03	0.01-0.05	0.02-0.10
K	Cast Iron	50-120	0.005-0.03	0.01-0.05	0.02-0.10
N	Aluminum ≤12%Si, Copper	130-250	0.005-0.04	0.01-0.06	0.02-0.13
	Aluminum >12%Si	80-180	0.005-0.04	0.01-0.06	0.02-0.13
	Synthetics, Duroplastics, Thermoplastics	80-180	0.005-0.04	0.01-0.06	0.02-0.13
S	Nickel alloys, Titanium alloys	20- 80	0.005-0.02	0.01-0.04	0.02-0.09

Cutting Data

Mini Mill-Thread MTS, MTI and FMTI types

MT6 Ultra-Fine carbide grade with high hardness and toughness provides an excellent solution for machining steels, stainless steels, and super alloys Ni or Ti base. With a universal PVD multi-layer coating, provides high heat and wear resistance.

MT7 Sub-Micron Grade with Titanium Aluminum Nitride multi-layer coating (ISO K10 - K20). This is a general purpose grade, which can be used with all materials; it should be run at medium to high cutting speeds.

MT8 Sub-Micron Grade with Aluminum Titanium Nitride (AlTiN) multi-layer coating (ISO K10-K20). Extremely high heat resistant and smooth cutting operation, for high performance, and normal machining conditions. General purpose for all materials.

MT11 Ultra-fine Sub-Micron grade with advanced PVD triple coating.

ISO Standard	Materials	Cutting Speed m/min	Feed mm/tooth — Cutting Diameter = D													
			Ø1	Ø1.5	Ø2	Ø3	Ø4	Ø5	Ø6	Ø7	Ø8	Ø9	Ø10	Ø12	Ø14	Ø16
P	Low and Medium Carbon Steels < 0.55%C	60-120	0.04	0.05	0.05	0.07	0.09	0.11	0.13	0.14	0.15	0.16	0.16	0.17	0.18	0.18
	High Carbon Steels ≥ 0.55%C	60- 90	0.03	0.04	0.05	0.06	0.08	0.09	0.10	0.12	0.13	0.14	0.14	0.16	0.17	0.18
	Alloy Steels, Treated Steels	50- 80	0.03	0.04	0.04	0.05	0.05	0.06	0.07	0.07	0.08	0.09	0.10	0.12	0.13	0.14
M	Stainless Steels - Free Cutting	70-100	0.02	0.03	0.03	0.04	0.05	0.06	0.06	0.07	0.08	0.09	0.10	0.11	0.12	0.13
	Stainless Steels - Austenitic	60- 90	0.02	0.03	0.03	0.04	0.05	0.06	0.06	0.07	0.08	0.09	0.10	0.11	0.12	0.13
	Cast Steels	70- 90	0.03	0.04	0.04	0.05	0.05	0.06	0.07	0.07	0.08	0.09	0.10	0.12	0.13	0.14
K	Cast Iron	40- 80	0.04	0.05	0.05	0.07	0.09	0.11	0.13	0.14	0.15	0.16	0.16	0.17	0.18	0.18
N	Aluminum ≤12%Si, Copper	100-200	0.04	0.05	0.05	0.07	0.09	0.11	0.13	0.14	0.15	0.16	0.16	0.17	0.18	0.18
	Aluminum >12% Si	60-140	0.03	0.03	0.03	0.04	0.05	0.06	0.06	0.07	0.08	0.09	0.10	0.11	0.13	0.14
	Synthetics, Duroplastics, Thermoplastics	50-200	0.09	0.10	0.11	0.12	0.14	0.16	0.18	0.19	0.19	0.19	0.19	0.19	0.20	0.20
S	Nickel Alloys and Titanium Alloys	20- 40	0.03	0.03	0.03	0.04	0.04	0.05	0.06	0.06	0.06	0.07	0.07	0.07	0.08	0.08

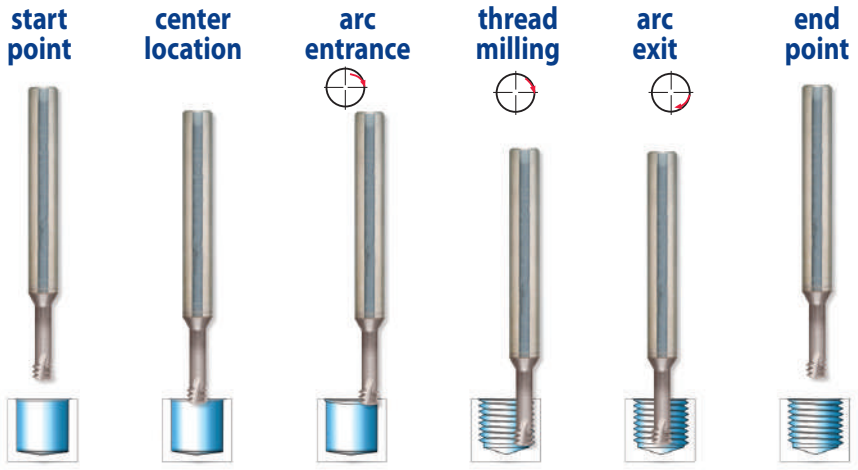

Mini Mill-Thread vs. Taps

Features	Mini Mill-Thread	Taps
Thread surface quality	High	Medium
Thread geometry	Very accurate	Medium
Thread tolerances	4H, 5H, 6H with std cutter	6H with standard tap, 4H with specific tap
Machining time	Same as tap or shorter	Short
Tool breakage	Almost not possible	Could happen often
Machining load	Very low	High
Range of thread diameters	Wide range of diameters	Specific tap for each diameter
Right/Left hand threading	Same cutter	Specific tap for each
Geometric shape	Full profile	Partial profile

Cutting Data

MTSB

ISO Standard	Materials	Cutting speed Vc [m/min]	Feed Fz [mm/tooth] Cutting Diameter=D					
			Ø1	Ø1.5	Ø2	Ø3	Ø4	Ø5
P	Low and Medium Carbon Steels < 0.55%C	60-120	0.04	0.05	0.05	0.07	0.09	0.11
	High Carbon Steels ≥ 0.55%C	60- 90	0.03	0.04	0.05	0.06	0.08	0.09
	Alloy Steels, Treated Steels	50- 80	0.03	0.04	0.04	0.05	0.05	0.06
M	Stainless Steel - Free Cutting	70-100	0.02	0.03	0.03	0.04	0.05	0.06
	Stainless Steel - Austenitic	60- 90	0.02	0.03	0.03	0.04	0.05	0.06
	Cast Steels	70- 90	0.03	0.04	0.04	0.05	0.05	0.06
K	Cast Iron	40- 80	0.04	0.05	0.05	0.07	0.09	0.11
N	Aluminum ≤ 12%Si, Copper	100-200	0.04	0.05	0.05	0.07	0.09	0.11
	Aluminum > 12%Si	60-140	0.03	0.03	0.03	0.04	0.05	0.06
	Synthetics, Duroplastics, Thermoplastics	50-200	0.09	0.10	0.11	0.12	0.14	0.16
S	Nickel Alloys, Titanium Alloys.	20- 40	0.03	0.03	0.03	0.04	0.04	0.05
H	Hardened Steel, 45-50HRc	60- 70	0.03	0.04	0.04	0.05	0.05	0.06

Cutting Data

DMT type

MT7 Sub-Micron Grade with Titanium Aluminum Nitride multi-layer coating (ISO K10 - K20). This is a general purpose grade, which can be used with all materials; it should be run at medium to high cutting speeds.

ISO	Materials	Cutting Speed m/min	Feed mm/tooth							
			Ø3	Ø4	Ø5	Ø6	Ø8	Ø9	Ø10	Ø12
P	Low and Medium Carbon Steels < 0.55%C	60 - 120	0.02	0.03	0.03	0.04	0.05	0.05	0.05	0.05
	High Carbon Steels ≥ 0.55%C	60 - 90	0.015	0.02	0.03	0.03	0.04	0.04	0.04	0.05
	Alloy Steels, Treated Steels	50 - 80	0.015	0.02	0.02	0.02	0.02	0.03	0.03	0.04
M	Stainless Steels - Free Cutting	70 - 100	0.015	0.02	0.02	0.02	0.02	0.03	0.03	0.03
	Stainless Steels - Austenitic	60 - 90	0.015	0.02	0.02	0.02	0.02	0.03	0.03	0.03
	Cast Steels	70 - 90	0.015	0.02	0.02	0.02	0.02	0.03	0.03	0.04
K	Cast Iron	40 - 80	0.02	0.03	0.03	0.04	0.05	0.05	0.05	0.05
N	Aluminum ≤12%Si, Copper	100 - 200	0.02	0.03	0.03	0.04	0.05	0.05	0.05	0.05
	Aluminum >12% Si	60 - 140	0.015	0.02	0.02	0.02	0.02	0.03	0.03	0.03
	Synthetics, Duroplastics, Thermoplastics	50 - 200	0.03	0.04	0.05	0.05	0.06	0.06	0.06	0.06

DMTH type

MT11 Ultra-fine Sub-Micron grade with advanced PVD triple Blue coating.

ISO	Materials	Cutting Speed m/min	Feed mm/tooth							
			Ø2	Ø3	Ø4	Ø5	Ø6	Ø8	Ø9	Ø10	Ø12
P	Low and Medium Carbon Steels < 0.55%C	60 - 120	0.02	0.02	0.03	0.03	0.04	0.05	0.05	0.05	0.05
	High Carbon Steels ≥ 0.55%C	60 - 90	0.02	0.02	0.02	0.03	0.03	0.04	0.04	0.04	0.05
	Alloy Steels, Treated Steels	50 - 80	0.02	0.02	0.02	0.02	0.02	0.02	0.03	0.03	0.04
M	Stainless Steels - Free Cutting	70 - 100	0.02	0.02	0.02	0.02	0.02	0.02	0.03	0.03	0.03
	Stainless Steels - Austenitic	60 - 90	0.02	0.02	0.02	0.02	0.02	0.02	0.03	0.03	0.03
	Cast Steels	70 - 90	0.02	0.02	0.02	0.02	0.02	0.02	0.03	0.03	0.04
K	Cast Iron	40 - 80	0.03	0.03	0.03	0.03	0.04	0.05	0.05	0.05	0.05
N	Aluminum ≤10%Si, Copper	100 - 200	0.03	0.03	0.03	0.03	0.04	0.05	0.05	0.05	0.05
	Aluminum >10% Si	60 - 140	0.02	0.02	0.02	0.02	0.02	0.02	0.03	0.03	0.03
	Synthetics, Duroplastics, Thermoplastics	50 - 200	0.04	0.05	0.05	0.05	0.05	0.06	0.06	0.06	0.06
S	Nickel Alloys, Titanium Alloys and High Temp. Alloys	20 - 40	0.02	0.03	0.03	0.04	0.05	0.05	0.06	0.06	0.06
H	Hardened Steels 45-50 HRc	60 - 70	0.02	0.02	0.02	0.03	0.04	0.04	0.05	0.05	0.05
	Hardened Steels 50-55 HRc	50 - 60	0.01	0.01	0.01	0.02	0.03	0.03	0.04	0.04	0.04

Cutting Data

MT Drill - MTD

Carbide grade **K20:** Uncoated Sub-Micron carbide grade dedicated for machining Aluminum and Cast Iron.

MT7: Sub-Micron carbide grade combines high hardness and toughness, with PVD triple coating for smooth cutting and high performance.

Material Group	Materials	Cutting Speed m/min		Feed mm/r Cutting Diameter = D			Feed mm/tooth Cutting Diameter = D		
				Drilling			Mill Thread		
		K20	MT7	D≤4	4<D<6	D≥6	D≤4	4<D<6	D≥6
K	Cast Iron	50- 80	80-120	0.10-0.15	0.15-0.20	0.15-0.30	0.005-0.03	0.01-0.05	0.02-0.10
N	Aluminum ≤12%Si, Copper	100-250	100-350	0.06-0.10	0.10-0.20	0.20-0.30	0.005-0.04	0.01-0.06	0.02-0.13
	Aluminum >12%Si	---	80-180	0.05-0.07	0.10-0.15	0.15-0.25	0.005-0.04	0.01-0.06	0.02-0.13
	Synthetics, Duroplastics, Thermoplastics	60-100	80-180	0.10-0.20	0.20-0.30	0.20-0.30	0.005-0.04	0.01-0.06	0.02-0.13

MT Drill working cycle

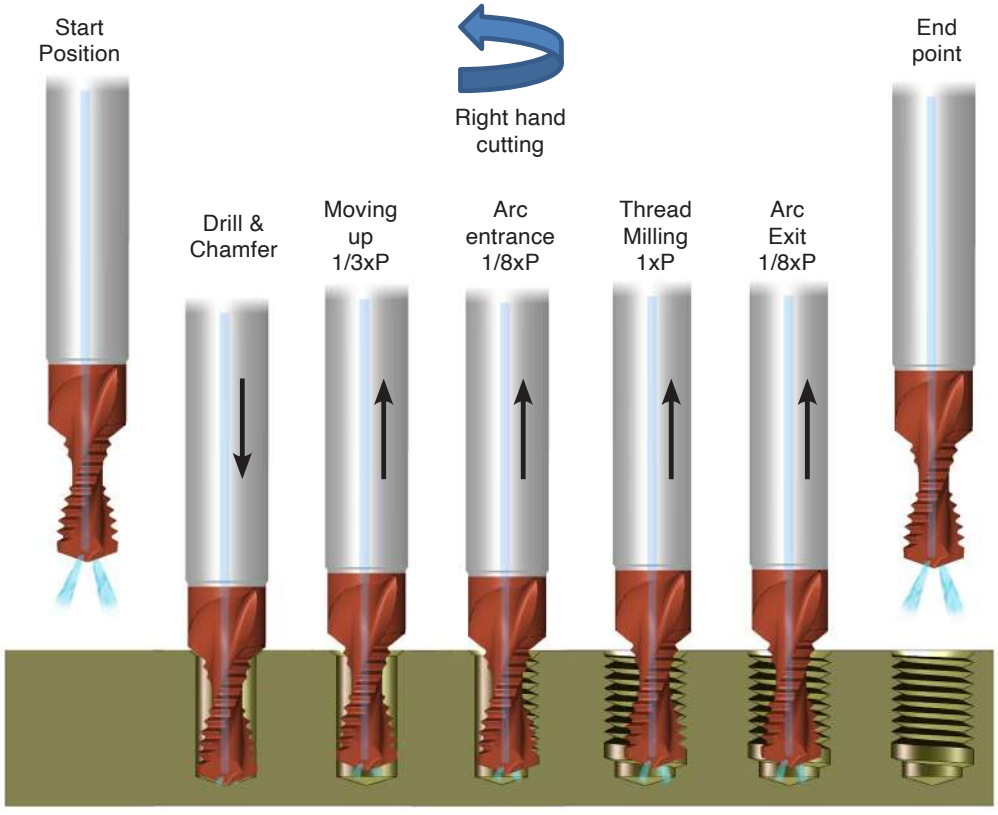

Cutting Data

Mini Mill-Thread MTSH and FSH

MT9 Sub-Micron Grade with advanced PVD triple coating.

MT6 Ultra-Fine carbide grade with high hardness and toughness provides an excellent solution for machining steels, stainless steels, and super alloys Ni or Ti base. With a universal PVD multi-layer coating, provides high heat and wear resistance.

MT3 Ultra-Fine carbide grade with PVD multi-layer coating for machining Super Alloys and Hard materials up to 65 HRc. Provides supreme edge stability with high heat and wear resistance. For increased productivity and high performance.

Left hand cutting for CNC code use M04

ISO	Materials	Hardness HRc	Cutting Speed m/min	Feed mm/tooth Cutting Diameter = D													
				Ø1	Ø1.5	Ø2	Ø3	Ø4	Ø5	Ø6	Ø7	Ø8	Ø9	Ø10	Ø12	Ø14	Ø16
S	Nickel Alloys, Titanium Alloys and High Temp. Alloys		20-40	0.03	0.03	0.03	0.04	0.04	0.05	0.06	0.06	0.06	0.07	0.07	0.07	0.08	0.08
H	Hardened Steels	45 - 50	60 - 70	0.03	0.04	0.04	0.05	0.05	0.06	0.06	0.07	0.07	0.08	0.08	0.09	0.10	0.11
		51 - 55	50 - 60	0.02	0.03	0.03	0.04	0.04	0.05	0.05	0.06	0.06	0.07	0.07	0.08	0.09	0.10
		56 - 62	40 - 50	0.01	0.02	0.02	0.03	0.03	0.04	0.04	0.05	0.05	0.06	0.06	0.07	0.08	0.09

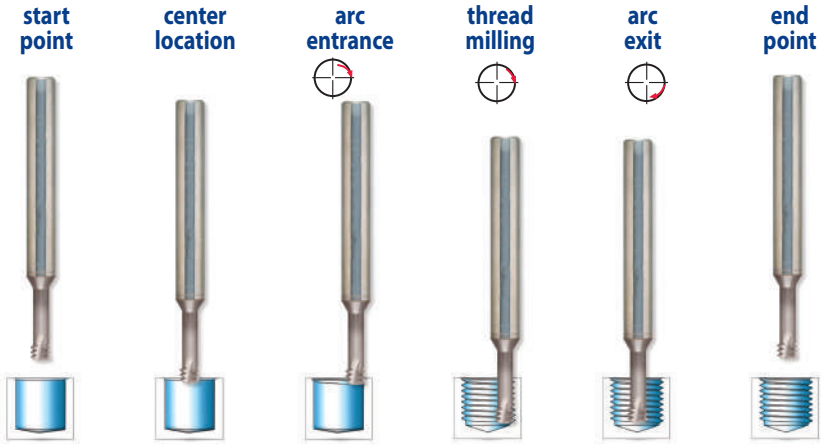

Case Study

Application	Internal Thread M4 X 0.7
Thread Depth	8.0 mm
Workpiece Material	Tool Steel: D2
Hardness	60-62 (HRc)
Cutter Description	MTSH06031C9 0.7 ISO
Machining Conditions	Cutting Speed: 44 m / min Feed: 0.03 mm / tooth
Machine	Mori Seiki VN5000
Control	Fanuc
Cooling Lubricant	Emulsion
Tool Life (No. of Threads)	84

Cutting Data

MTH type

MT11 Sub-Micron Grade with advanced PVD triple coating.

ISO	Materials	Hardness HRc	Cutting Speed m/min	Feed mm/tooth Cutting Diameter = D								
				Ø2.5	Ø3	Ø4	Ø5	Ø6	Ø7	Ø8	Ø9	Ø10
S	Nickel Alloys, Titanium Alloys and High Temp. Alloys		20-50	0.02	0.02	0.02	0.02	0.03	0.03	0.03	0.03	0.04
H	Hardened Steels Cast Iron	45 - 50 51 - 55 56 - 62	70 - 80 60 - 70 40 - 50	0.02 0.01 0.005	0.03 0.02 0.01	0.03 0.02 0.01	0.04 0.03 0.02	0.04 0.03 0.02	0.05 0.04 0.03	0.05 0.04 0.03	0.06 0.05 0.04	0.07 0.06 0.05

For cutters with long cutting length reduce feed rate by 40%

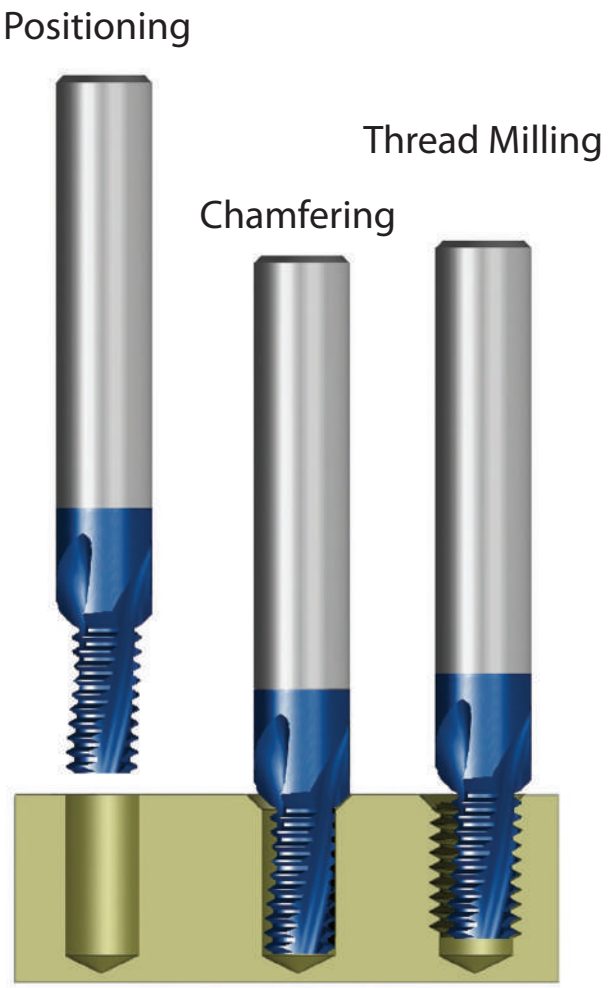

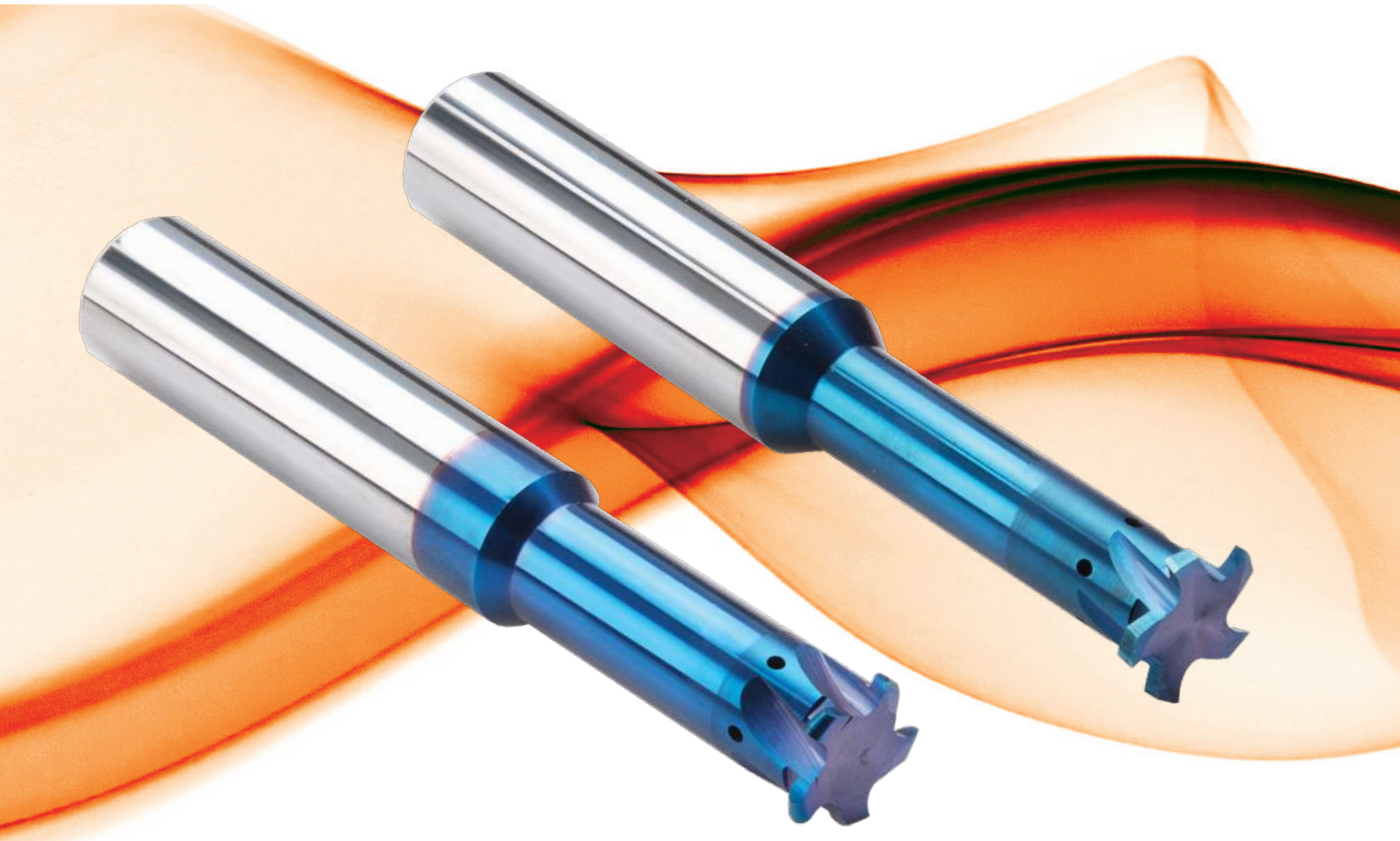

Demonstration

For Grooving Deep Parts

Advantages

Carbide grade: MT8 Sub-micron grade with advanced PVD triple coating (ISO K10-K20). Extremely high heat resistant and smooth cutting operation. For high performance and normal machining conditions. General purpose for all materials.

- Enables machining in deep holes.
- Coolant through the flutes is very effective for deep holes.
- Spiral flutes allow smooth cutting action.
- Longer tool life due to special multi-layer coating.
- Shorter machining time due to multi (3 to 5) flutes.

Contents:	Page:	Contents:	Page:
Product Identification	2	Full Radius Groove Milling with internal coolant through the flutes	4
Groove Milling with internal coolant through the flutes	3	Deep Groove Milling	4
		Technical Section	5

Product Identification

Groove Milling Ordering Codes

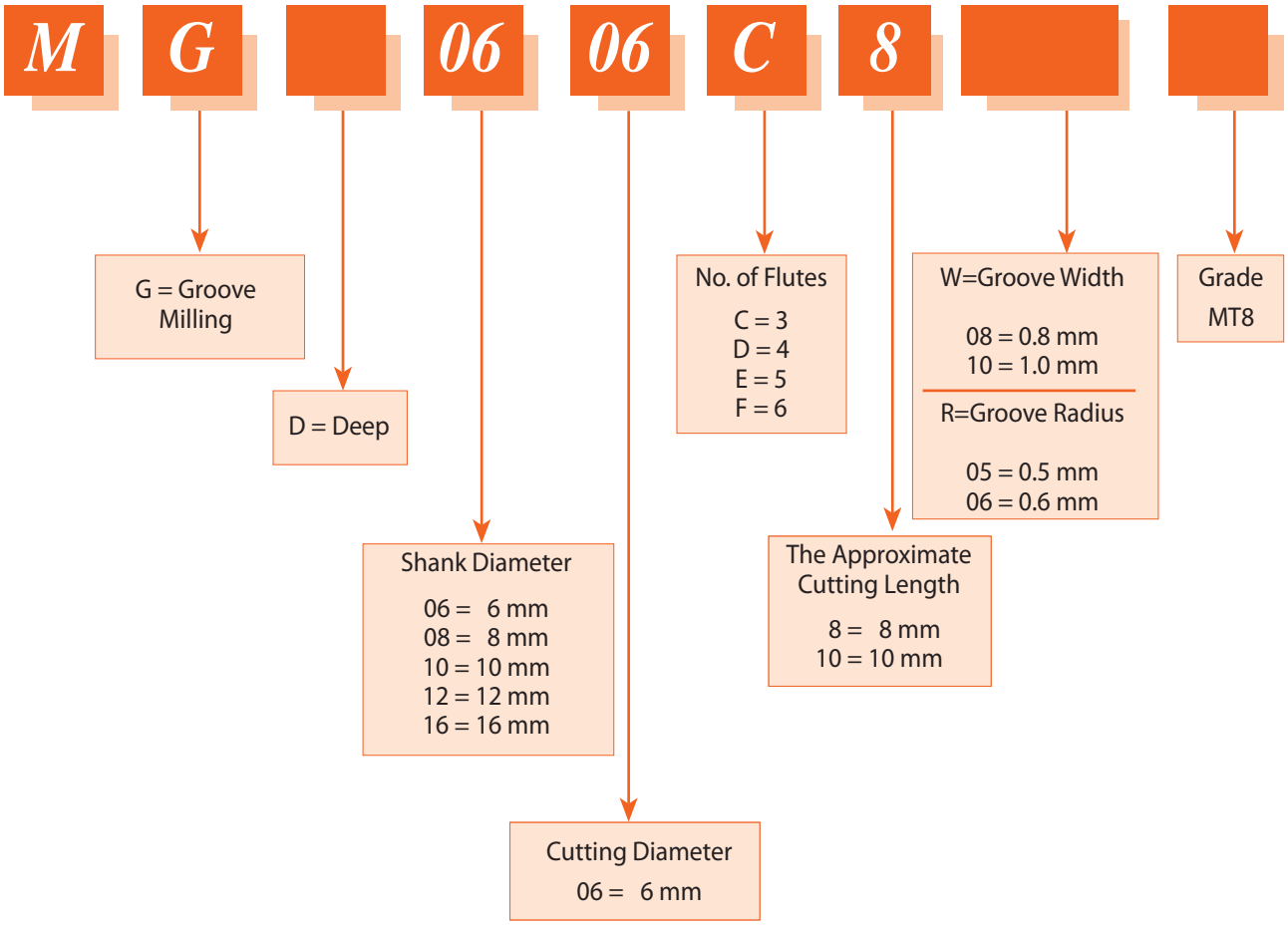

Groove Milling

with internal coolant through the flutes

Same Tool for Internal and External Grooving

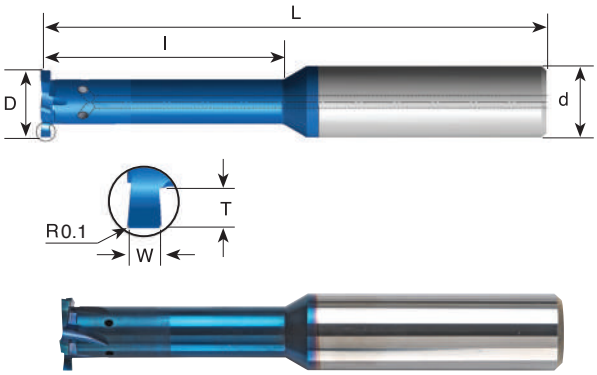

For grooving deep parts

W ± 0.02	T Max.	Groove Dia. (min.) mm	Ordering Code	d	D	No. of Flutes	l	L
0.50	0.6	ø> 4	*MG 0604 C4 W05	6	4.0	3	4.2	51
1.00	0.6	ø> 4	*MG 0604 C4 W10	6	4.0	3	4.2	51
0.80	0.8	ø> 6	MG 0606 C8 W08	6	6.0	3	8.0	58
1.00	1.0	ø> 6	*MG 0606 C7 W10	6	6.0	3	7.0	58
1.50	1.0	ø> 6	*MG 0606 C7 W15	6	6.0	3	7.0	58
1.00	1.2	ø≥ 7.8	MG 08078 D10 W10	8	7.8	4	10.0	64
1.50	1.5	ø≥ 7.8	MG 08078 D15 W15	8	7.8	4	15.0	64
2.00	1.5	ø≥ 7.8	MG 08078 D15 W20	8	7.8	4	15.0	64
1.20	1.4	ø≥ 9.8	MG 10098 D20 W12	10	9.8	4	20.0	73
1.50	2.0	ø≥ 9.8	MG 10098 D20 W15	10	9.8	4	20.0	73
2.00	2.0	ø≥ 9.8	MG 10098 D20 W20	10	9.8	4	20.0	73
1.50	2.2	ø≥12	MG 1212 E30 W15	12	12.0	5	30.0	84
2.00	2.2	ø≥12	MG 1212 E30 W20	12	12.0	5	30.0	84
3.00	2.2	ø≥12	MG 1212 E30 W30	12	12.0	5	30.0	84
1.40	1.8	ø≥16	MG 1616 E30 W14	16	16.0	5	30.0	101
1.70	2.0	ø≥16	MG 1616 E40 W17	16	16.0	5	40.0	101
1.95	2.2	ø≥16	MG 1616 E45 W19	16	16.0	5	45.0	101

Order example: MG 10098D20 W12 MT8

* Tools without coolant

Full Radius Groove Milling

with internal coolant through the flutes

***Same Tool for Internal and External Grooving**

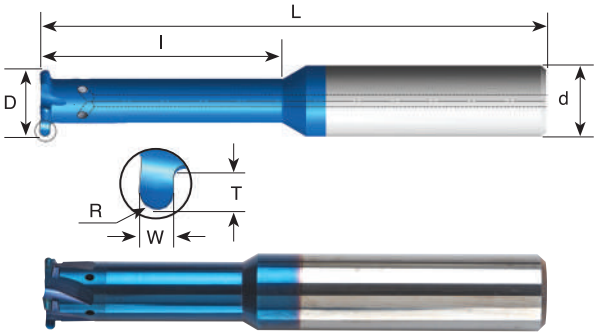

For grooving deep parts

R	W ± 0.02	T Max.	Groove Dia. (min.)	Ordering Code	d	D	No. of Flutes	l	L
0.5	1.00	0.6	ø> 4	***MG 0604 C4 R05**	6	4.0	3	4.2	51
0.5	1.00	0.8	ø> 6	**MG 0606 C8 R05**	6	6.0	3	8.0	58
0.75	1.50	1.0	ø> 6	***MG 0606 C7 R075**	6	6.0	3	7.0	58
0.5	1.00	1.0	ø≥ 8.8	**MG 10088 D16 R05**	10	8.8	4	16.0	73
0.6	1.20	1.0	ø≥10	**MG 1010 D20 R06**	10	10.0	4	20.0	73
0.75	1.50	2.0	ø≥10	**MG 1010 D20 R075**	10	10.0	4	20.0	73
1.00	2.00	2.0	ø≥10	**MG 1010 D20 R10**	10	10.0	4	20.0	73
0.9	1.80	1.4	ø≥12	**MG 1212 D30 R09**	12	12.0	4	30.0	84
1.0	2.00	1.6	ø≥16	**MG 1616 E40 R10**	16	16.0	5	40.0	101
1.5	3.00	2.2	ø≥16	**MG 1616 E40 R15**	16	16.0	5	40.0	101

Order example: MG 1010 D20 R06 MT8

* Tools without coolant

Deep Groove Milling

with internal coolant bore



Ordering Code	W ± 0.02	R	T (max.)	Groove Dia. (min.)	d	D	No. of Flutes	L
MGD 10195 F W15	1.5	0.1	4.5	Ø>19.5	10	19.5	6	128
MGD 10195 F W20	2.0	0.1	4.5	Ø>19.5	10	19.5	6	128
MGD 10195 F W30	3.0	0.1	4.5	Ø>19.5	10	19.5	6	128
MGD 10195 F W35	3.5	0.1	4.5	Ø>19.5	10	19.5	6	128
MGD 10195 F W40	4.0	0.1	4.5	Ø>19.5	10	19.5	6	128
MGD 10195 F W50	5.0	0.1	4.5	Ø>19.5	10	19.5	6	128

* Same tool for internal and external grooving

Technical Section

Cutting Data

ISO	Materials	Cutting Speed m/min	Feed mm/tooth Cutting Diameter=D												
			Ø1.5	Ø2	Ø3	Ø4	Ø5	Ø6	Ø7	Ø8	Ø9	Ø10	Ø12	Ø14	Ø16
P	Low and Medium Carbon Steels <0.55%C	60 - 120	0.03	0.04	0.05	0.06	0.08	0.09	0.10	0.11	0.11	0.11	0.12	0.13	0.13
	High Carbon Steels ≥0.55%C	60 - 90	0.02	0.04	0.04	0.06	0.06	0.07	0.08	0.09	0.10	0.10	0.11	0.12	0.13
	Alloy Steels, Treated Steels	50 - 80	0.02	0.03	0.04	0.04	0.04	0.05	0.05	0.06	0.06	0.07	0.08	0.09	0.10
M	Stainless Steels - Free Cutting	70 - 100	0.01	0.02	0.03	0.04	0.04	0.04	0.05	0.06	0.06	0.07	0.08	0.08	0.09
	Stainless Steels - Austenitic	60 - 90	0.01	0.02	0.03	0.04	0.04	0.04	0.05	0.06	0.06	0.07	0.08	0.08	0.09
	Cast Steels	70 - 90	0.02	0.03	0.04	0.04	0.04	0.05	0.05	0.06	0.06	0.07	0.08	0.09	0.10
K	Cast Iron	4 0 - 80	0.03	0.04	0.05	0.06	0.08	0.09	0.10	0.11	0.11	0.11	0.12	0.13	0.13
N	Aluminum ≤12%Si, Copper	100 - 200	0.03	0.04	0.05	0.06	0.08	0.09	0.10	0.11	0.11	0.11	0.12	0.13	0.13
	Aluminum >12% Si	60 - 140	0.02	0.02	0.03	0.04	0.04	0.04	0.05	0.06	0.06	0.07	0.08	0.09	0.10
	Synthetics, Duroplastics, Thermoplastics	50 - 200	0.06	0.08	0.08	0.10	0.11	0.13	0.13	0.13	0.13	0.13	0.13	0.14	0.14
S	Nickel Alloys, Titanium Alloys	20 - 40	0.02	0.02	0.03	0.03	0.04	0.04	0.04	0.04	0.05	0.05	0.05	0.06	0.06
H	Hardened Steel, ≤50 HRc	60 - 70	0.02	0.03	0.04	0.04	0.04	0.04	0.05	0.05	0.06	0.06	0.06	0.07	0.08

Supercut Solid Carbide Mills | B14



Contents:	Page:
End-Mills Features	2
Product Identification	3
High Performance Solid Carbide End-Mills	4-19
4 flutes - Short or Long	5
4 flutes with corner radius - Short or Long	6
4 flutes with corner radius and neck	7
5 flutes - Long	8
5 flutes with corner radius - Long	8
5 flutes with corner radius and neck	9
6 flutes - Extra Long	10
6 flutes with corner radius and neck	10
7 flutes with corner radius	11
Ballnose End-Mills 4 flutes with neck	11
Technical Section	12-15
High Performance Solid Carbide End-Mills for Aluminum machining	16-19
Solid Carbide End-Mills 3 flutes	17
Solid Carbide End-Mills 3 flutes with corner radius	17
Technical Section	18
Application Example	19
Multi-Function Milling Tools (MF)	20-23
Product Identification	21
Working Methods	22
Technical Section	23
CR-Supercut Roughers	24-30
Product Identification	25
Short	26
Long	26
With Neck	27
Solid Carbide Roughers for Aluminum Machining	28-30
Without internal coolant	28
With internal coolant through the flutes	29
Technical Section	30
Indexable CMT Roughers and Finishers	31-33
Product Identification	31
Roughers	32
Finishers	32
Toolholders	33
CR-Supercut High Feed End-Mills	34-39
CR-Supercut High Feed End-Mills Features	35
Product Identification	36
Solid Carbide High Feed End-Mills	37
Technical Section	38
Case Study	39

End-Mills Features

Center cutting
For plunging and ramping operations

Optimized cutting edge geometry
For smooth cutting and mirror surface finish

Reinforced tool corner
Prevents chipping

Unequal helix design
For minimum vibration and high feed rates



Unequal flute indexing
Reduces harmonic vibration

Unique core design

Polished surface
Provides an extra smooth workpiece surface finish

CR3 grade
Superior carbide grade combined with new generation of PVD coating

HPC – High Performance Cutting
High feed rate and maximum metal removal

Product Identification

Ordering Codes

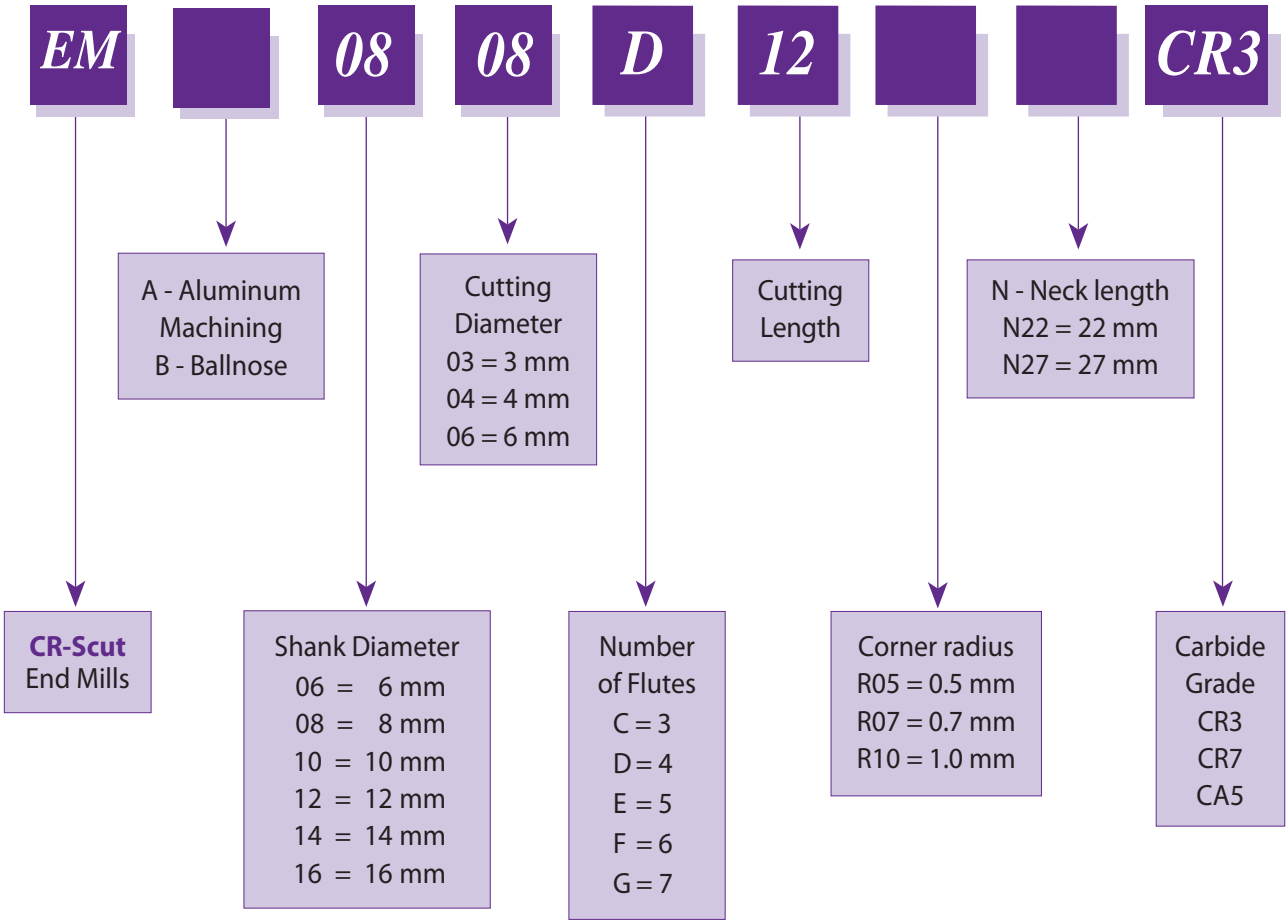

CR-Supercut End-Mills

High Performance Solid Carbide End-Mills



High Performance CR-Supercut End-Mills, designed for high feed machining and high metal removal rate for a wide range of materials. Innovative tool geometry delivers high performance with low vibration machining in one pass. One tool for semi-finishing and fine-finishing operation with sharp corner or radii.

- High Performance Cutting (HPC)
- Center cutting
- Low vibration machining
- High metal removal rates in Slotting, Shouldering and Helical Plunging operations.
- 3-7 flutes

Carbide grade: CR3

Ultra-Fine carbide grade with high hardness and toughness provides high cutting edge stability and wear resistance.
A New Generation of PVD Coating for High-Performance Cutting Applications.

Carbide grade: CR7

Optimal combination of high hardness and excellent wear resistance grade, both in dry or wet machining. Suitable for finishing and semi-finishing of steels, stainless steels and super alloys.
A New Generation of PVD Coating for High-Performance Cutting Applications.

High Performance Solid Carbide End-Mills

Solid Carbide End-Mills 4 flutes

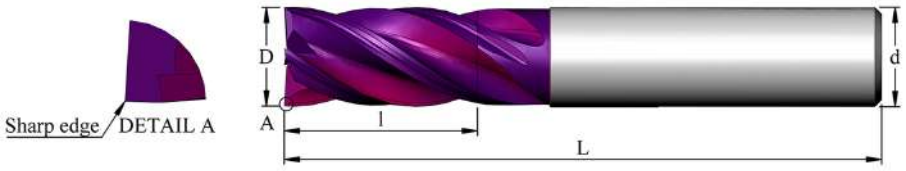

Short Design



Grade	P	M	K	N	S	H
CR3	●	○	●		○	≤48 HRc
CR7	●	●			●	≤58 HRc

Ordering Code	d	D	No. of Flutes	l	L
EM 0604 D08	6	4	4	8	57
EM 0605 D10	6	5	4	10	57
EM 0606 D10	6	6	4	10	57
EM 0808 D12	8	8	4	12	63
EM 1010 D14	10	10	4	14	72
EM 1212 D16	12	12	4	16	73
EM 1414 D18	14	14	4	18	75
EM 1616 D24	16	16	4	24	82
EM 2020 D30	20	20	4	30	92

Order example: EM 1212 D16 CR7

Long Design



Grade	P	M	K	N	S	H
CR3	●	○	●		○	≤48 HRc
CR7	●	●			●	≤58 HRc

Ordering Code	d	D	No. of Flutes	l	L
EM 0603 D08	6	3	4	8	57
EM 0604 D11	6	4	4	11	57
EM 0605 D13	6	5	4	13	57
EM 0606 D16	6	6	4	16	57
EM 0807 D16	8	7	4	16	63
EM 0808 D19	8	8	4	19	63
EM 1009 D20	10	9	4	20	72
EM 1010 D22	10	10	4	22	72
EM 1212 D26	12	12	4	26	83
EM 1414 D26	14	14	4	26	85
EM 1616 D32	16	16	4	32	92
EM 2020 D38	20	20	4	38	104

Order example: EM 0808 D19 CR3

● First choice ○ Alternative

Solid Carbide End-Mills 4 flutes with corner radius

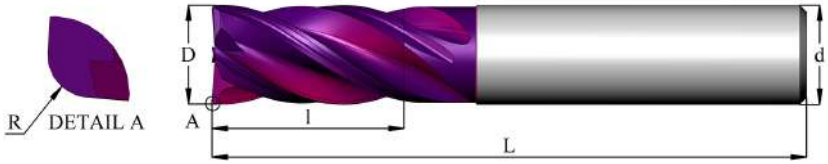

Short Design



Grade	P	M	K	N	S	H
CR3	●	○	●		○	≤48 HRc
CR7	●	●			●	≤58 HRc

Ordering Code	d	D	No. of Flutes	R	l	L
EM 0606 D12 R02	6	6	4	0.2	12	57
EM 0808 D12 R05	8	8	4	0.5	12	63
EM 1010 D14 R05	10	10	4	0.5	14	72
EM 1212 D16 R07	12	12	4	0.7	16	73
EM 1414 D18 R07	14	14	4	0.7	18	75
EM 1616 D24 R10	16	16	4	1.0	24	82
EM 2020 D30 R10	20	20	4	1.0	30	92

Order example: EM 1616 D24 R10 CR3

Long Design



Grade	P	M	K	N	S	H
CR3	●	○	●		○	≤48 HRc
CR7	●	●			●	≤58 HRc

Ordering Code	d	D	No. of Flutes	R	l	L
EM 0603 D08 R03	6	3	4	0.3	8	57
EM 0604 D11 R03	6	4	4	0.3	11	57
EM 0605 D13 R03	6	5	4	0.3	13	57
EM 0606 D16 R05	6	6	4	0.5	16	57
EM 0807 D16 R03	8	7	4	0.3	16	63
EM 0808 D19 R05	8	8	4	0.5	19	63
EM 1010 D22 R03	10	10	4	0.3	22	72
EM 1010 D22 R05	10	10	4	0.5	22	72
EM 1212 D26 R03	12	12	4	0.3	26	83
EM 1212 D26 R07	12	12	4	0.7	26	83
EM 1414 D26 R07	14	14	4	0.7	26	85
EM 1616 D32 R03	16	16	4	0.3	32	92
EM 1616 D32 R10	16	16	4	1.0	32	92
EM 2020 D38 R10	20	20	4	1.0	38	104

Order example: EM 1212 D26 R03 CR7

● First choice ○ Alternative

Solid Carbide End-Mills 4 flutes with corner radius and neck

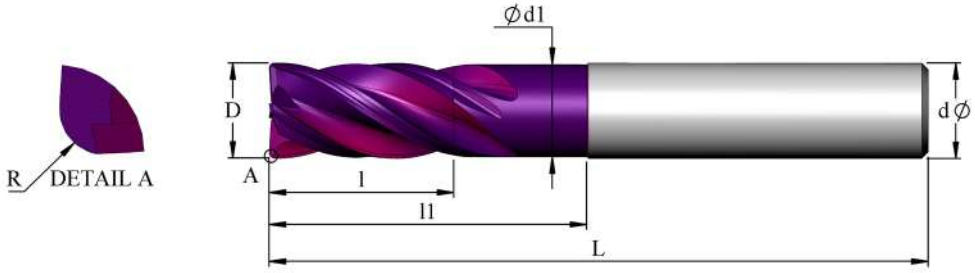



Grade	P	M	K	N	S	H
CR7	●	●			●	≤58 HRc

Ordering Code	d	D	l	l1	d1	R	No. of Flutes	L
EM 0605 D13 R04 N20	6	5	13	20	4.8	0.4	4	57
EM 0605 D13 R10 N20	6	5	13	20	4.8	1.0	4	57
EM 0606 D13 R05 N22	6	6	13	22	5.8	0.5	4	57
EM 0606 D13 R10 N22	6	6	13	22	5.8	1.0	4	57
EM 0808 D17 R05 N29	8	8	17	29	7.7	0.5	4	80
EM 0808 D17 R10 N29	8	8	17	29	7.7	1.0	4	80
EM 1010 D22 R05 N33	10	10	22	33	9.7	0.5	4	80
EM 1010 D22 R10 N33	10	10	22	33	9.7	1.0	4	80
EM 1212 D26 R05 N40	12	12	26	40	11.6	0.5	4	102
EM 1212 D26 R10 N40	12	12	26	40	11.6	1.0	4	102
EM 1616 D32 R05 N46	16	16	32	46	15.5	0.5	4	105
EM 1616 D32 R10 N46	16	16	32	46	15.5	1.0	4	105

Order example: EM 0808 D17 R10 N29 CR7

● First choice ○ Alternative

Solid Carbide End-Mills 5 flutes

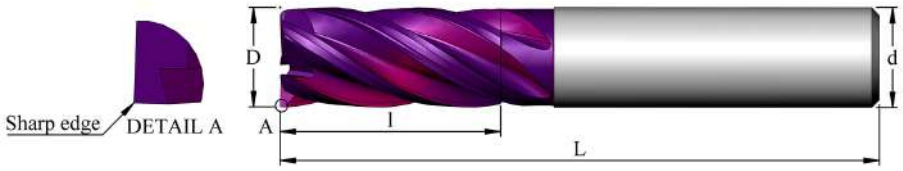

Long Design



Grade	P	M	K	N	S	H
CR3	●	○	●		○	≤48 HRc
CR7	●	●			●	≤58 HRc

Ordering Code	d	D	No. of Flutes	l	L
EM 0606 E13	6	6	5	13	57
EM 0808 E19	8	8	5	19	63
EM 1010 E22	10	10	5	22	72
EM 1212 E26	12	12	5	26	83
EM 1414 E26	14	14	5	26	85
EM 1616 E32	16	16	5	32	92
EM 2020 E38	20	20	5	38	104

Order example: EM 0606 E13 CR7

Solid Carbide End-Mills 5 flutes with corner radius

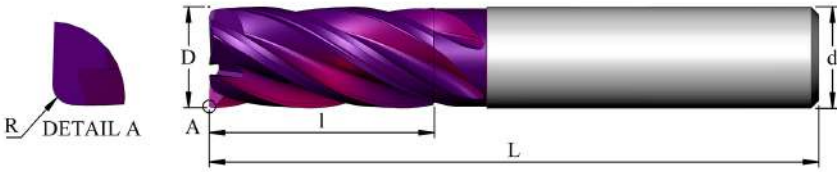

Long Design



Grade	P	M	K	N	S	H
CR3	●	○	●		○	≤48 HRc
CR7	●	●			●	≤58 HRc

Ordering Code	d	D	No. of Flutes	R	l	L
EM 0606 E13 R05	6	6	5	0.5	13	57
EM 0808 E19 R05	8	8	5	0.5	19	63
EM 1010 E22 R05	10	10	5	0.5	22	72
EM 1212 E26 R07	12	12	5	0.7	26	83
EM 1414 E26 R07	14	14	5	0.7	26	85
EM 1616 E32 R10	16	16	5	1.0	32	92
EM 2020 E38 R10	20	20	5	1.0	38	104

Order example: EM 0808 E19 R05 CR7

● First choice ○ Alternative

Solid Carbide End-Mills 5 flutes with corner radius and neck

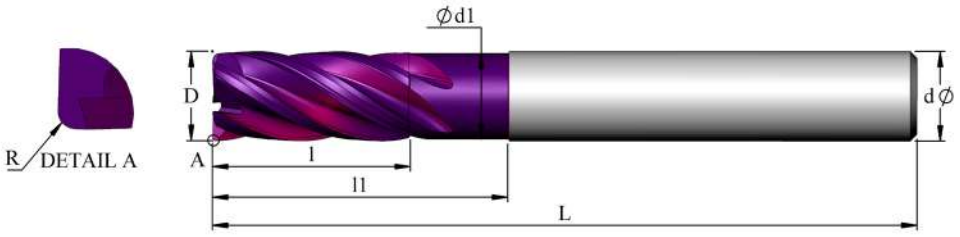



Grade	P	M	K	N	S	H
CR7	●	●			●	≤58 HRc

Ordering Code	d	D	l	l1	d1	R	No. of Flutes	L
EM 0606 E13 R05 N22	6	6	13	22	5.8	0.5	5	57
EM 0606 E13 R10 N22	6	6	13	22	5.8	1.0	5	57
EM 0808 E19 R05 N27	8	8	19	27	7.7	0.5	5	80
EM 0808 E19 R10 N27	8	8	19	27	7.7	1.0	5	80
EM 1010 E22 R05 N33	10	10	22	33	9.7	0.5	5	80
EM 1010 E22 R10 N33	10	10	22	33	9.7	1.0	5	80
EM 1212 E26 R05 N38	12	12	26	38	11.6	0.5	5	102
EM 1212 E26 R10 N38	12	12	26	38	11.6	1.0	5	102
EM 1616 E32 R05 N48	16	16	32	48	15.5	0.5	5	105
EM 1616 E32 R10 N48	16	16	32	48	15.5	1.0	5	105

Order example: EM 1212 E26 R05 N38 CR7

● First choice ○ Alternative

Solid Carbide End-Mills 6 flutes

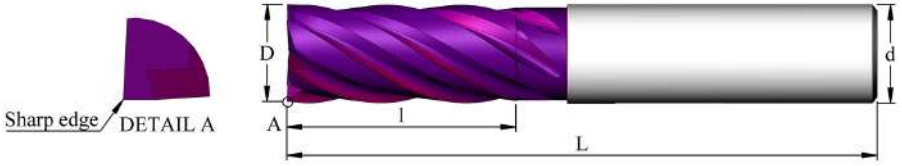

Extra-long Design

HPC | 36°/38° | 6

Grade	P	M	K	N	S	H
CR3	●	○	●		○	≤48 HRc
CR7	●	●			●	≤58 HRc

Ordering Code	d	D	No. of Flutes	l	L
EM 0606 F18	6	6	6	18	57
EM 0808 F24	8	8	6	24	63
EM 1010 F30	10	10	6	30	80
EM 1212 F36	12	12	6	36	83
EM 1414 F42	14	14	6	42	100
EM 1616 F48	16	16	6	48	105
EM 2020 F60	20	20	6	60	150

Order example: EM 1414 F42 CR7

Solid Carbide End-Mills 6 flutes with corner radius and neck

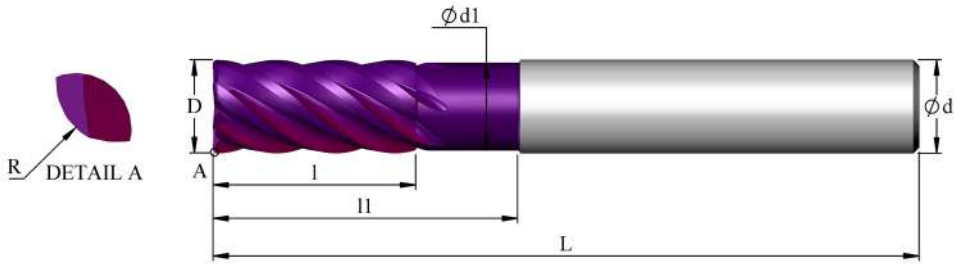

HPC | 36°/38° | 6

Grade	P	M	K	N	S	H
CR7	●	●			●	≤58 HRc

Ordering Code	d	D	l	l1	d1	R	No. of Flutes	L
EM 1010 F22 R05 N33	10	10	22	33	9.7	0.5	6	80
EM 1010 F22 R10 N33	10	10	22	33	9.7	1.0	6	80
EM 1212 F26 R05 N38	12	12	26	38	11.6	0.5	6	102
EM 1212 F26 R10 N38	12	12	26	38	11.6	1.0	6	102
EM 1616 F34 R05 N48	16	16	34	48	15.5	0.5	6	105
EM 1616 F34 R10 N48	16	16	34	48	15.5	1.0	6	105
EM 2020 F38 R05 N60	20	20	38	60	19.0	0.5	6	150
EM 2020 F38 R10 N60	20	20	38	60	19.0	1.0	6	150

Order example: EM 1010 F22 R10 N33 CR7

● First choice ○ Alternative

Solid Carbide End-Mills 7 flutes with corner radius

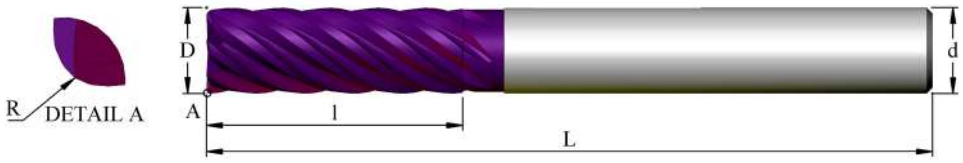

HPC | 36°/38° | 7

Grade	P	M	K	N	S	H
CR7	●	●			●	≤58 HRc

Ordering Code	d	D	No. of Flutes	R	l	L
EM 1010 G30 R05	10	10	7	0.5	30	80
EM 1010 G30 R10	10	10	7	1.0	30	80
EM 1212 G36 R05	12	12	7	0.5	36	102
EM 1212 G36 R10	12	12	7	1.0	36	102
EM 1616 G48 R05	16	16	7	0.5	48	110
EM 1616 G48 R10	16	16	7	1.0	48	110

Order example: EM 1010 G30 R05 CR7

Solid Carbide Ballnose End-Mills 4 flutes with neck

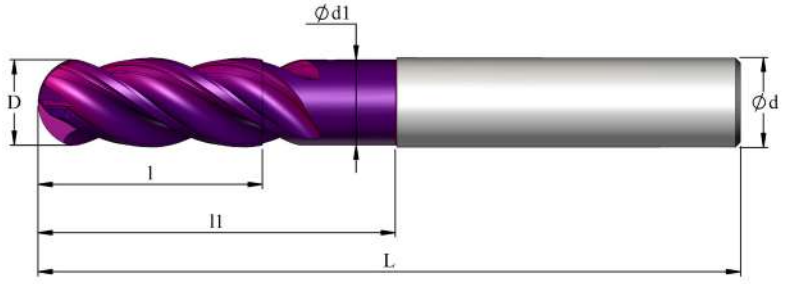

HPC | 36°/38° | 4

Grade	P	M	K	N	S	H
CR7	●	●			●	≤58 HRc

Ordering Code	d	D	l	l1	d1	No. of Flutes	L
EMB 0605 D09 N14	6	5	9	14	4.8	4	57
EMB 0606 D10 N15	6	6	10	15	5.8	4	57
EMB 0808 D15 N20	8	8	15	20	7.7	4	63
EMB 1010 D18 N25	10	10	18	25	9.7	4	80
EMB 1212 D24 N30	12	12	24	30	11.6	4	83
EMB 1616 D32 N38	16	16	32	38	15.5	4	105

Order example: EMB 1010 D18 N25 CR7

● First choice ○ Alternative

Technical Section

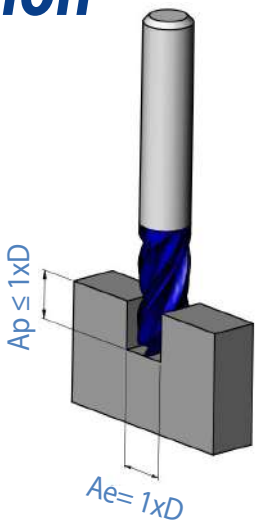

D = Cutting Dia

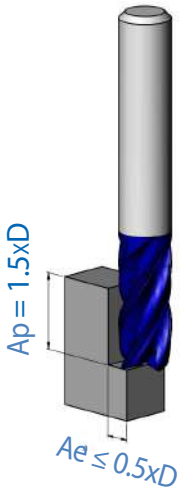

Cutting Data

4 fluted End-Mills and Ballnose

ISO	Materials Class	Vc [m/min]	Fz [mm/tooth] Cutting Diameter								
			Ø3	Ø4 - Ø5	Ø6 - Ø7	Ø8 - Ø9	Ø10	Ø12	Ø14	Ø16	Ø20
P	Low & Medium Carbon Steels <0.55%C	120-160	0.006	0.020	0.030	0.040	0.047	0.056	0.059	0.064	0.078
	High Carbon Steels ≥0.55%C	120-160	0.006	0.020	0.030	0.040	0.047	0.056	0.059	0.064	0.078
	Alloy Steels, Treated Steels	100-140	0.005	0.012	0.020	0.030	0.039	0.047	0.049	0.053	0.065
M	Stainless Steel-Free Cutting	80-140	0.005	0.017	0.020	0.030	0.040	0.047	0.049	0.053	0.065
	Stainless Steel-Austenitic	70-130	0.004	0.012	0.020	0.022	0.034	0.04	0.043	0.045	0.055
	Cast Steels	70-130	0.004	0.012	0.020	0.022	0.034	0.04	0.043	0.045	0.055
K	Cast Iron	80-140	0.005	0.017	0.023	0.027	0.039	0.047	0.049	0.053	0.065
S	Heat-resistant alloys	20-40	0.005	0.010	0.018	0.031	0.048	0.056	0.060	0.064	0.077
	Titanium alloys	80-100	0.005	0.010	0.018	0.031	0.048	0.056	0.060	0.064	0.077
H	Hardened Steel <48 HRc	40-70	0.007	0.010	0.017	0.020	0.023	0.025	0.026	0.027	0.028
	Hardened Steel 48-58 HRc	35-60	0.005	0.007	0.012	0.015	0.017	0.018	0.019	0.020	0.020

5 fluted End-Mills

ISO	Materials Class	Vc [m/min]	Fz [mm/tooth] Cutting Diameter						
			Ø6	Ø8	Ø10	Ø12	Ø14	Ø16	Ø20
P	Low & Medium Carbon Steels <0.55%C	120-160	0.034	0.040	0.050	0.063	0.069	0.076	0.089
	High Carbon Steels ≥0.55%C	120-160	0.034	0.040	0.050	0.063	0.069	0.076	0.089
	Alloy Steels, Treated Steels	100-140	0.034	0.038	0.050	0.063	0.069	0.076	0.089
M	Stainless Steel-Free Cutting	80-140	0.030	0.032	0.045	0.063	0.065	0.069	0.076
	Stainless Steel-Austenitic	70-130	0.030	0.032	0.045	0.063	0.065	0.069	0.076
	Cast Steels	70-130	0.030	0.032	0.045	0.063	0.065	0.069	0.076
K	Cast Iron	80-140	0.035	0.037	0.048	0.068	0.068	0.073	0.080
S	Heat-resistant alloys	20-40	0.018	0.031	0.048	0.056	0.060	0.064	0.077
	Titanium alloys	80-100	0.018	0.031	0.048	0.056	0.060	0.064	0.077
H	Hardened Steel <48 HRc	40-70	0.020	0.020	0.025	0.027	0.030	0.035	0.040
	Hardened Steel 48-58 HRc	35-60	0.015	0.015	0.018	0.020	0.022	0.026	0.030

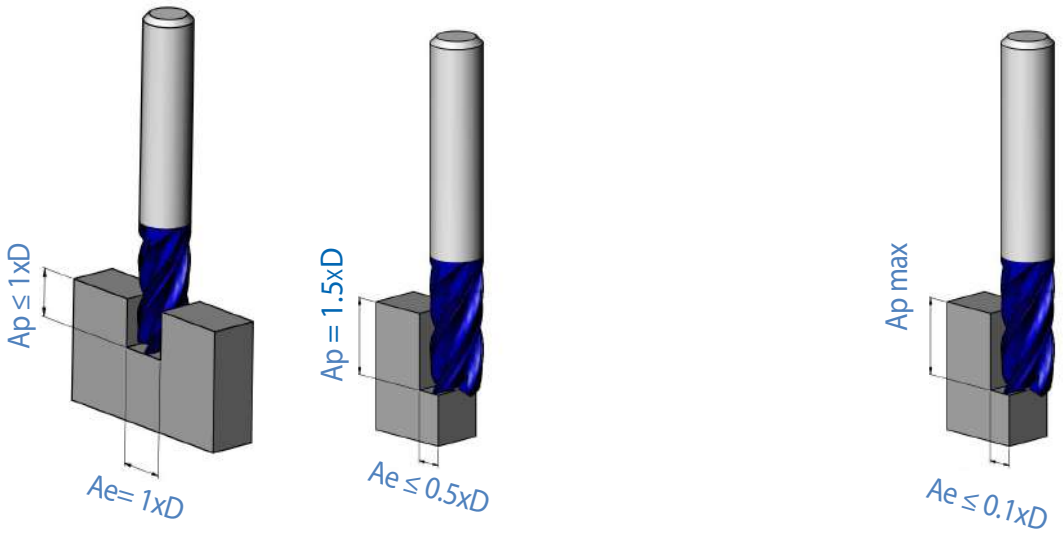

6 fluted End-Mills

ISO	Materials Class	Vc [m/min]	Fz [mm/tooth] Cutting Diameter Ø6	Ø8	Ø10	Ø12	Ø14	Ø16	Ø20
P	Low & Medium Carbon Steels <0.55%C	A:120-160 B:240-320	A:0.040 B:0.048	A:0.045 B:0.054	A:0.055 B:0.066	A:0.068 B:0.082	A:0.075 B:0.090	A:0.081 B:0.097	A:0.089 B:0.107
	High Carbon Steels ≥0.55%C	A:120-160 B:240-320	A:0.040 B:0.048	A:0.045 B:0.054	A:0.055 B:0.066	A:0.068 B:0.082	A:0.075 B:0.090	A:0.081 B:0.097	A:0.089 B:0.107
	Alloy Steels, Treated Steels	A:100-140 B:200-280	A:0.040 B:0.048	A:0.045 B:0.054	A:0.055 B:0.066	A:0.068 B:0.082	A:0.075 B:0.090	A:0.081 B:0.097	A:0.089 B:0.107
M	Stainless Steel-Free Cutting	A:80-140 B:160-280	A:0.035 B:0.042	A:0.037 B:0.044	A:0.050 B:0.060	A:0.068 B:0.078	A:0.070 B:0.084	A:0.074 B:0.089	A:0.081 B:0.097
	Stainless Steel-Austenitic	A:70-130 B:140-260	A:0.035 B:0.042	A:0.037 B:0.044	A:0.050 B:0.060	A:0.068 B:0.078	A:0.070 B:0.084	A:0.074 B:0.089	A:0.081 B:0.097
	Cast Steels	A:70-130 B:140-260	A:0.035 B:0.042	A:0.037 B:0.044	A:0.050 B:0.060	A:0.068 B:0.078	A:0.070 B:0.084	A:0.074 B:0.089	A:0.081 B:0.097
K	Cast Iron	A:80-140 B:150-270	A:0.038 B:0.045	A:0.040 B:0.047	A:0.053 B:0.063	A:0.071 B:0.081	A:0.073 B:0.087	A:0.077 B:0.092	A:0.084 B:0.100
S	Heat-resistant alloys	A:20-40 B:40-80	A:0.018 B:0.022	A:0.031 B:0.037	A:0.048 B:0.058	A:0.056 B:0.067	A:0.060 B:0.072	A:0.064 B:0.077	A:0.077 B:0.098
	Titanium alloys	A:80-100 B:160-200	A:0.018 B:0.022	A:0.031 B:0.037	A:0.048 B:0.058	A:0.056 B:0.067	A:0.060 B:0.072	A:0.064 B:0.077	A:0.077 B:0.098
H	Hardened Steel <48 HRc	A:40-70 B:80-140	A:0.023 B:0.028	A:0.025 B:0.030	A:0.030 B:0.036	A:0.033 B:0.040	A:0.036 B:0.043	A:0.040 B:0.048	A:0.045 B:0.054
	Hardened Steel 48-58 HRc	A:35-60 B:70-120	A:0.017 B:0.020	A:0.019 B:0.022	A:0.022 B:0.026	A:0.024 B:0.030	A:0.026 B:0.032	A:0.030 B:0.035	A:0.033 B:0.040

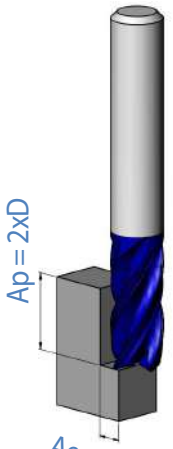

A

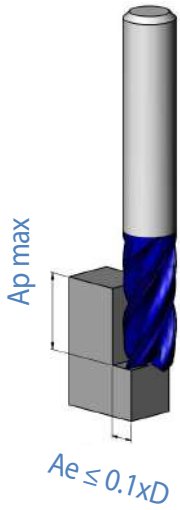

B

7 fluted End-Mills

ISO	Materials Class	Vc [m/min]	Fz [mm/tooth] Cutting Diameter Ø10	Ø12	Ø16
P	Low & Medium Carbon Steels <0.55%C	A:120-160 B:240-330	A:0.055 B:0.066	A:0.068 B:0.082	A:0.081 B:0.097
	High Carbon Steels ≥0.55%C	A:120-160 B:240-330	A:0.055 B:0.066	A:0.068 B:0.082	A:0.081 B:0.097
	Alloy Steels, Treated Steels	A:100-140 B:200-280	A:0.055 B:0.066	A:0.068 B:0.082	A:0.081 B:0.097
M	Stainless Steel-Free Cutting	A:80-140 B:160-280	A:0.050 B:0.060	A:0.068 B:0.078	A:0.074 B:0.089
	Stainless Steel-Austenitic	A:70-130 B:140-260	A:0.050 B:0.060	A:0.068 B:0.078	A:0.074 B:0.089
	Cast Steels	A:70-130 B:140-260	A:0.050 B:0.060	A:0.068 B:0.078	A:0.074 B:0.089
S	Heat-resistant alloys	A:20-40 B:40-80	A:0.048 B:0.058	A:0.056 B:0.067	A:0.064 B:0.077
	Titanium alloys	A:80-100 B:160-200	A:0.048 B:0.058	A:0.056 B:0.067	A:0.064 B:0.077
H	Hardened Steel <48 HRc	A:40-70 B:80-140	A:0.030 B:0.036	A:0.033 B:0.040	A:0.040 B:0.048
	Hardened Steel 48-58 HRc	A:35-60 B:70-120	A:0.022 B:0.026	A:0.024 B:0.030	A:0.030 B:0.035

CR-Supercut End-Mills

High Performance Solid Carbide End-Mills for Aluminum machining



- High Performance Cutting (HPC)
- Center cutting
- Low vibration machining
- High metal removal rates in Slotting, Shouldering and Helical Plunging operations.
- Smooth polished flutes, more flute space and open flute design for better chip flow away from cutting area.
- 3 flutes

Carbide Grade: CA5

Ultra-Fine carbide grade with high hardness and toughness provides high cutting edge stability and wear resistance.

Solid Carbide End-Mills 3 flutes

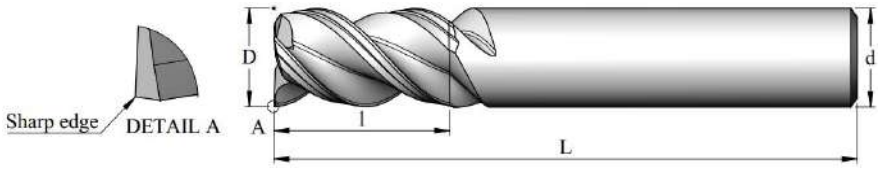

HPC | 36°/38° | 3

Grade	P	M	K	N	S	H
CA5				●		

Ordering Code	d	D	No. of Flutes	l	L
EMA 0303 C12	3	3	3	12	38
EMA 0404 C12	4	4	3	12	50
EMA 0505 C14	5	5	3	14	50
EMA 0606 C16	6	6	3	16	50
EMA 0808 C20	8	8	3	20	63
EMA 1010 C22	10	10	3	22	72
EMA 1212 C25	12	12	3	25	83
EMA 1414 C32	14	14	3	32	85
EMA 1616 C32	16	16	3	32	92
EMA 2020 C38	20	20	3	38	104

Order example: EMA 1010 C22 CA5

Solid Carbide End-Mills 3 flutes with corner radius

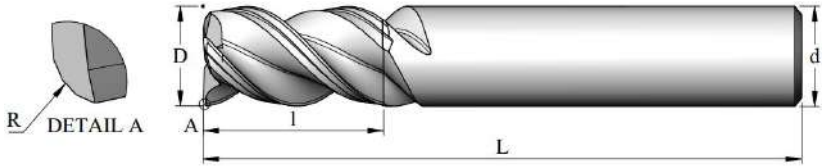

HPC | 36°/38° | 3

Grade	P	M	K	N	S	H
CA5				●		

Ordering Code	d	D	No. of Flutes	R	l	L
EMA 0303 C12 R03	3	3	3	0.3	12	38
EMA 0404 C12 R03	4	4	3	0.3	12	50
EMA 0505 C14 R03	5	5	3	0.3	14	50
EMA 0606 C16 R05	6	6	3	0.5	16	50
EMA 0808 C20 R05	8	8	3	0.5	20	63
EMA 1010 C22 R05	10	10	3	0.5	22	72
EMA 1212 C25 R07	12	12	3	0.7	25	83
EMA 1414 C32 R07	14	14	3	0.7	32	85
EMA 1616 C32 R10	16	16	3	1.0	32	92
EMA 2020 C38 R10	20	20	3	1.0	38	104

Order example: EMA 1010 C22 R05 CA5

● First choice ○ Alternative

Technical Section

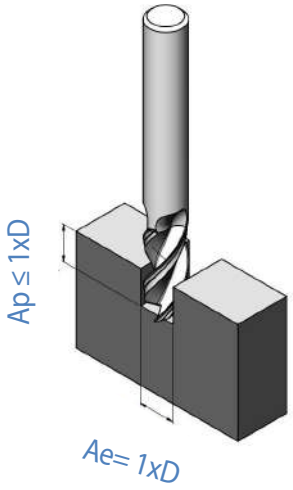

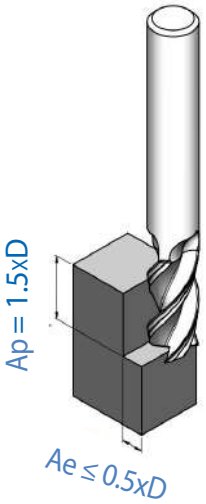

Cutting Data

Cutting conditions for side milling

ISO	Materials Class	Vc [m/min]	Fz [mm/tooth] Cutting Diameter									
			Ø3	Ø4	Ø5	Ø6	Ø8	Ø10	Ø12	Ø14	Ø16	Ø20
N	Aluminum ≤12%Si, Copper	500-1000	0.025	0.035	0.045	0.055	0.070	0.090	0.105	0.125	0.145	0.180
	Aluminum >12%Si	500-1000	0.020	0.030	0.038	0.049	0.063	0.081	0.096	0.115	0.130	0.160
	Synthetics, duroplastics, thermoplastics	500-1000	0.025	0.035	0.045	0.055	0.070	0.090	0.105	0.125	0.145	0.180

For slotting, reduce the Fz by 15%-25% depending on the application

Application Example

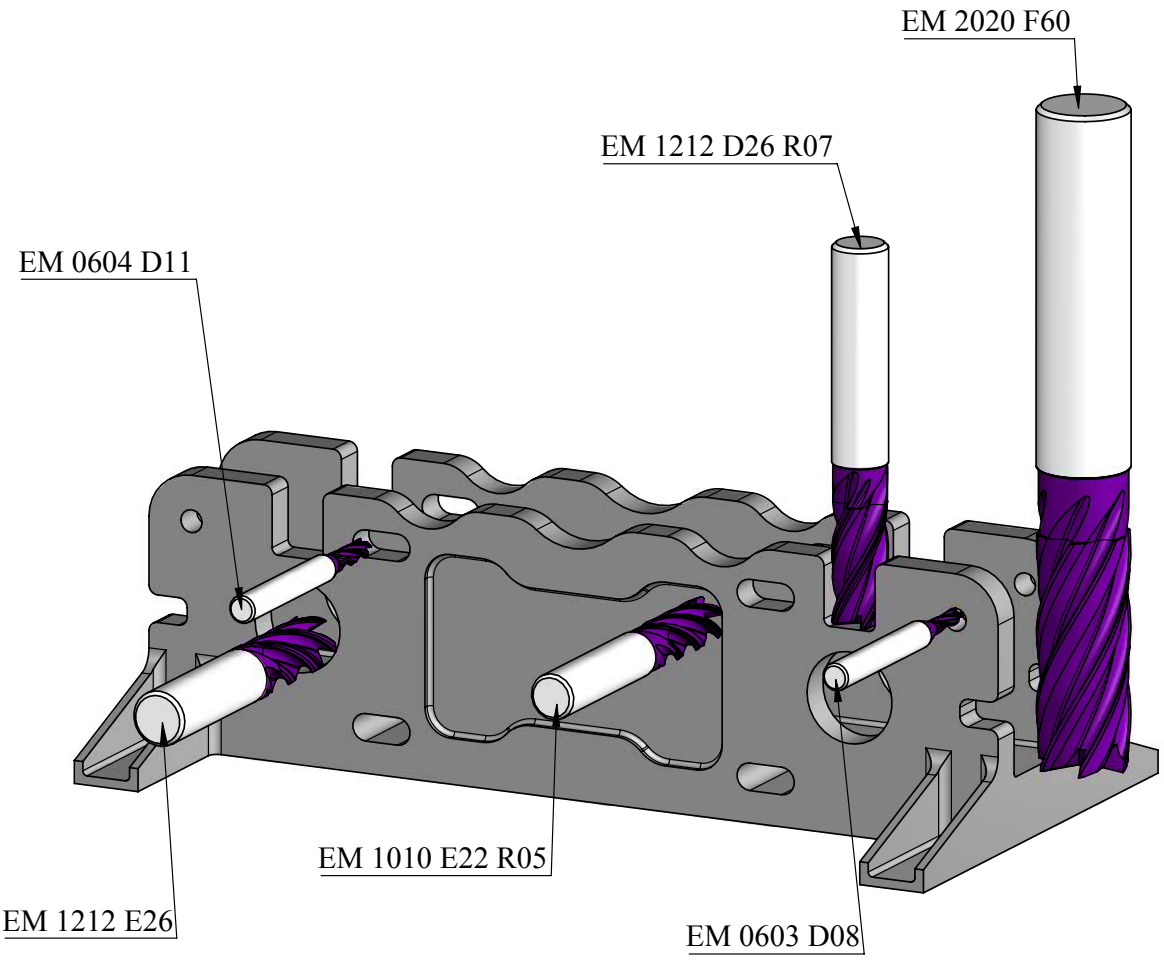

Multi-Function Milling Tools (MF)

Advantages

- Performs multiple operations with one tool
- Eliminates tool changes
- Reduces programming and setup times
- Reduces tool inventories
- Ideal for machines with a limited number of tool stations

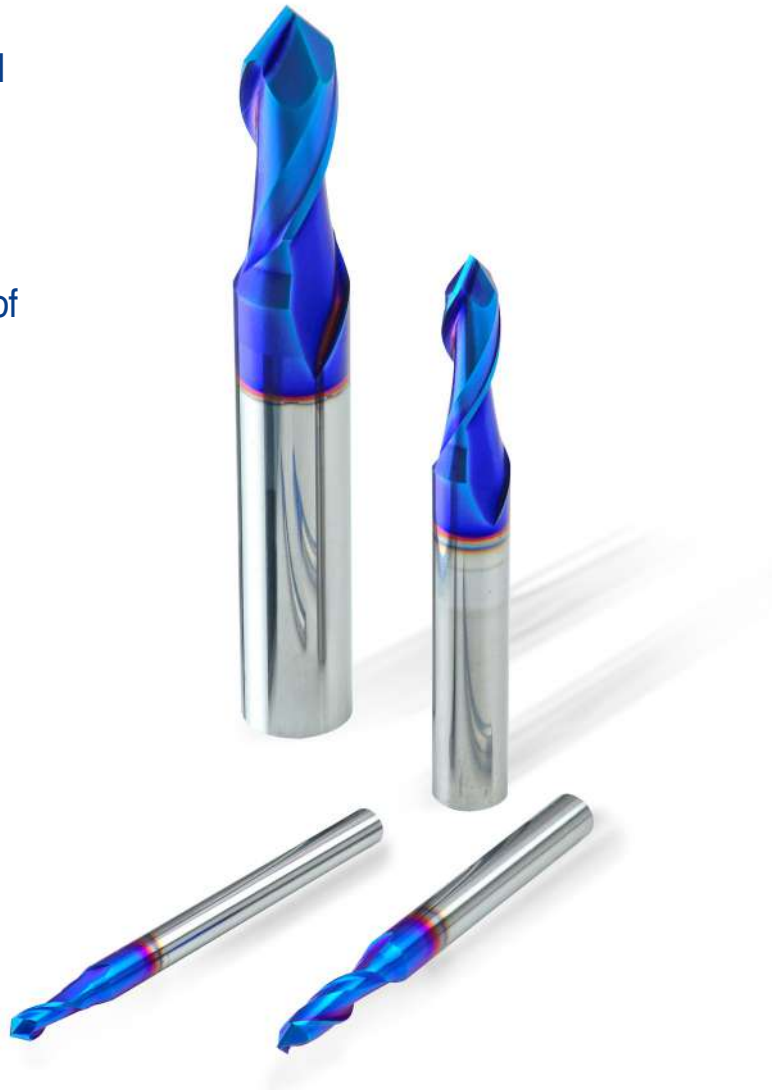

Applications

- Spotting and Drilling
- Side milling
- Chamfering
- Slotting
- Grooving
- Engraving

Demonstration

Carbide grades

CR3
Ultra-Fine carbide grade with high hardness and toughness provides high cutting edge stability and wear resistance.
A **New Generation** of PVD Coating for High-Performance Cutting Applications.

CR5
PVD coated **New** grade for machining hardened materials up to 56 HRc and Super alloys.

Product Identification

Ordering Codes

MF — Multi-Function Tool

04 — Shank Diameter
04 = 4 mm
05 = 5 mm
06 = 6 mm
08 = 8 mm

03 — Cutting Diameter
03 = 3 mm
04 = 4 mm
05 = 5 mm
06 = 6 mm

L6 — Approximate cutting length
L6 = 6.0 mm
L8 = 8.0 mm
L10 = 10.0 mm

A90 — Point angle
90˚
60˚
120˚

CR3 — Carbide Grade
CR3
CR5

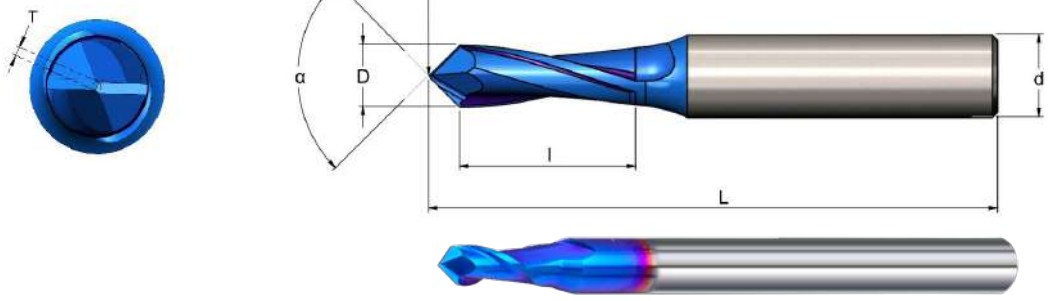

Grade	P	M	K	N	S	H
CR3	●	●	●	●	●	○
CR5	○		○		●	≤ 56 HRc

Ordering Code	d	D	α	*T	l	L
MF 0403 L6 A90	4	3.0	90°	0.3	6.0	51
MF 0504 L8 A90	5	4.0	90°	0.4	8.0	51
MF 0605 L10 A90	6	5.0	90°	0.5	10.0	58
MF 0806 L12 A90	8	6.0	90°	0.6	12.0	64
MF 1008 L16 A90	10	8.0	90°	0.8	16.0	73
MF 1210 L18 A90	12	10.0	90°	1.0	18.0	84
MF 1212 L20 A90	12	12.0	90°	1.2	20.0	84

● First choice ○ Alternative

* T = Web thickness No. of Flutes: 2

For 60˚, specify MF…A60 **For 120˚, specify MF…A120**

Order example: MF 1210 L18 A90 CR3

Working Methods

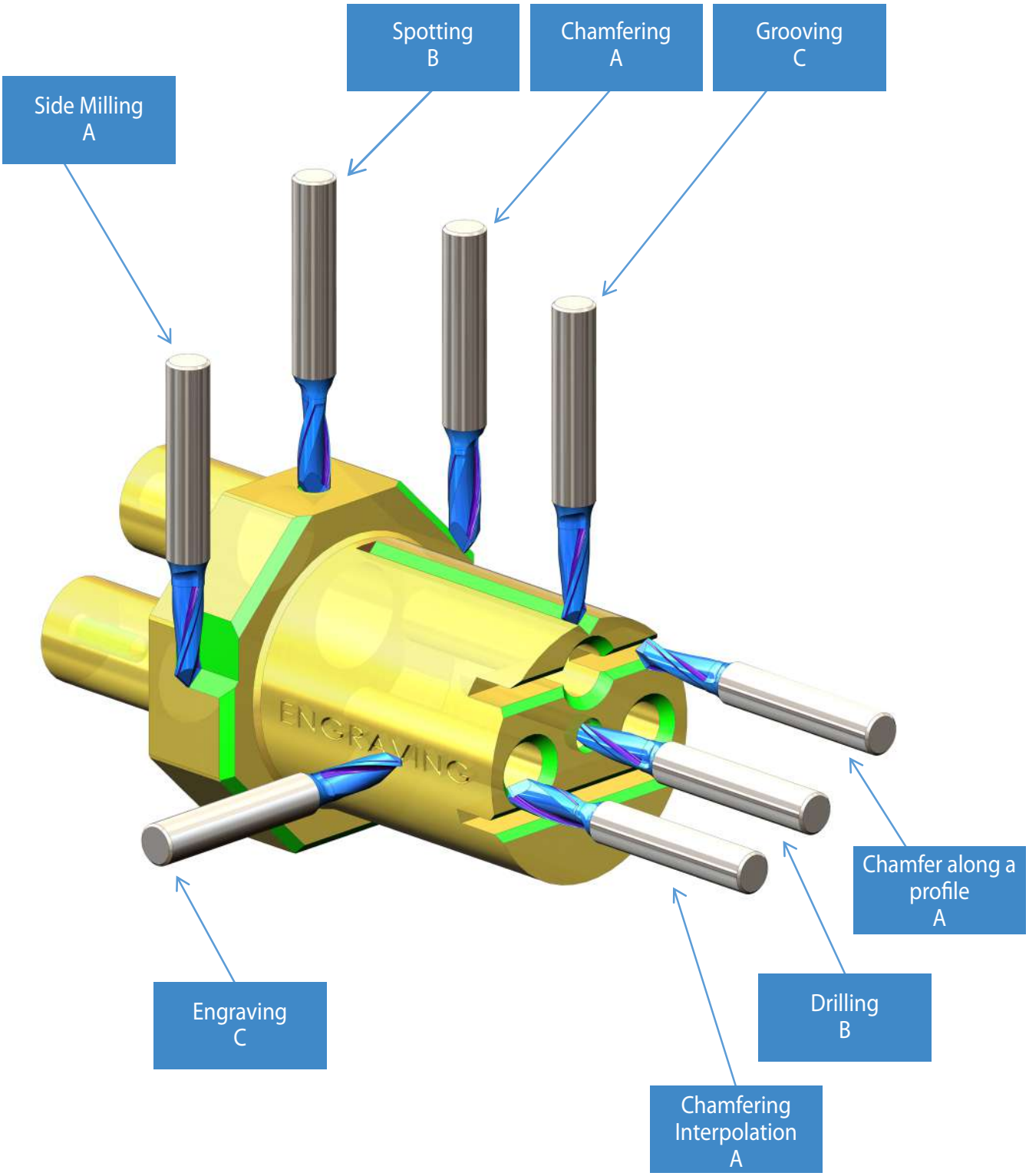

*** A, B, C refers to cutting data on next page.**

Technical Section

Cutting Data

A: Side milling, Chamfering
B: Spotting, Drilling
C: Grooving, Engraving

ISO Standard	Materials Class	Vc m/min	Fz mm/tooth Cutting Diameter		
			Ø3 - Ø4	Ø5 - Ø6	Ø8 - Ø12
P	Low & Medium Carbon Steels <0.55%C	50-115	A: 0.003-0.01 B: 0.003-0.007 C: 0.005-0.015	A: 0.005-0.02 B: 0.004-0.009 C: 0.006-0.025	A: 0.013-0.038 B: 0.007-0.015 C: 0.015-0.038
	High Carbon Steels ≥0.55%C	40-100	A: 0.002-0.012 B: 0.003-0.007 C: 0.005-0.018	A: 0.005-0.018 B: 0.006-0.01 C: 0.01-0.028	A: 0.009-0.03 B: 0.009-0.018 C: 0.016-0.047
	Alloy Steels, Treated Steels	40-100	A: 0.002-0.008 B: 0.003-0.006 C: 0.005-0.015	A: 0.005-0.015 B: 0.004-0.009 C: 0.005-0.018	A: 0.013-0.031 B: 0.006-0.015 C: 0.015-0.031
M	Stainless Steel-Free Cutting	30-85	A: 0.004-0.012 B: 0.003-0.007 C: 0.004-0.018	A: 0.007-0.018 B: 0.004-0.016 C: 0.006-0.018	A: 0.018-0.047 B: 0008-0.024 C: 0.012-0.047
	Stainless Steel-Austenitic	25-70	A: 0.005-0.010 B: 0.003-0.006 C: 0.004-0.015	A: 0.006-0.015 B: 0.004-0.015 C: 0.005-0.017	A: 0.017-0.04 B: 0.007-0.02 C: 0.01-0.035
	Cast Steels	40-90	A: 0.004-0.012 B: 0.003-0.007 C: 0.004-0.018	A: 0.007-0.018 B: 0.004-0.016 C: 0.006-0.018	A: 0.018-0.047 B: 0008-0.024 C: 0.012-0.047
K	Cast Iron	30-120	A: 0.003-0.01 B: 0.003-0.007 C: 0.005-0.015	A: 0.005-0.02 B: 0.004-0.009 C: 0.006-0.025	A: 0.013-0.038 B: 0.007-0.015 C: 0.015-0.038
N	Aluminum ≤12%Si, Copper	90-120	A: 0.005-0.008 B: 0.004-0.007 C: 0.005-0.008	A: 0.01-0.02 B: 0.008-0.015 C: 0.01-0.02	A: 0.025-0.045 B: 0.02-0.04 C: 0.025-0.045
	Aluminum >12%Si	75-100	A: 0.003-0.006 B: 0.003-0.005 C: 0.003-0.008	A: 0.005-0.015 B: 0.006-0.01 C: 0.005-0.015	A: 0.02-0.032 B: 0.015-0.035 C: 0.02-0.032
	Synthetics, Duroplastics, Thermoplastics	90-120	A: 0.005-0.008 B: 0.004-0.007 C: 0.005-0.008	A: 0.01-0.02 B: 0.008-0.015 C: 0.01-0.02	0.025-0.045 B: 0.02-0.04 C: 0.025-0.045
S	Nickel alloys, Titanium alloys	20-60	A: 0.004-0.008 B: 0.003-0.007 C: 0.002-0.005	A: 0.007-0.01 B: 0.006-0.008 C: 0.005-0.007	A: 0.01-0.025 B: 0.008-0.02 C: 0.007-0.015
H	Hardened Steel 40-45 HRc	20-60	A: 0.005-0.009 B: 0.004-0.008 C: 0.003-0.006	A: 0.008-0.015 B: 0.007-0.009 C: 0.006-0.008	A: 0.015-0.03 B: 0.009-0.025 C: 0.008-0.02
	Hardened Steel 45-56 HRc	10-50	A: 0.004-0.009 B: 0.003-0.008 C: 0.002-0.006	A: 0.007-0.015 B: 0.006-0.009 C: 0.005-0.008	A: 0.014-0.03 B: 0.008-0.025 C: 0.007-0.02

CR-Supercut Roughers

CPT solid carbide Roughers are innovative high performance mills, specifically designed for high volume machining applications.

Multi-flute, semi-finish profile and center cutting.

Provides high metal removal rates in Slotting, Shouldering and Helical Plunging operations.



Features

- High Performance Cutting (HPC)
- Innovative roughing geometry produces smaller chips
- Low cutting forces
- Extremely high material removal rate
- Reinforced corner chamfer, promotes additional strength for longer tool life
- Designed to machine difficult and abrasive materials

Carbide Grade: CR3

Ultra-Fine carbide grade with high hardness and toughness provides high cutting edge stability and wear resistance.

A **New Generation** of PVD Coating for High-Performance Cutting Applications.

Product Identification

Ordering Codes

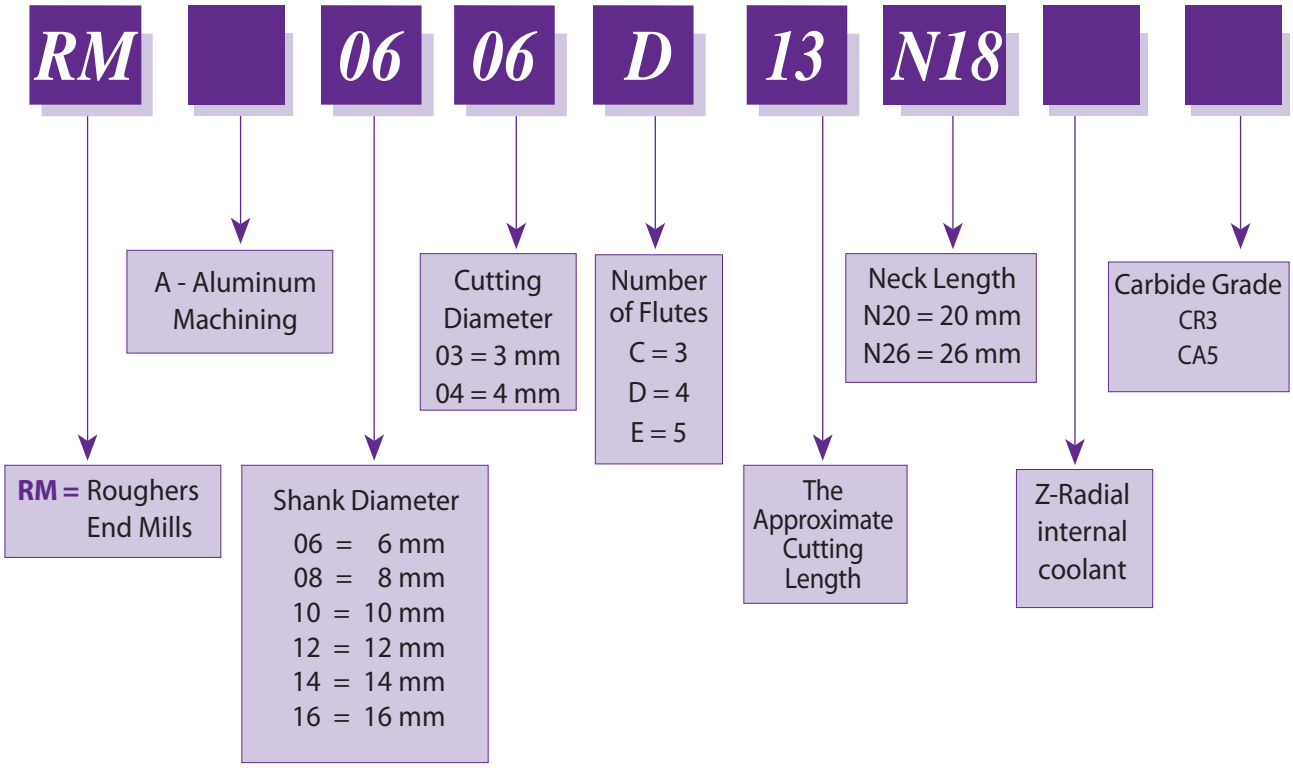

Solid Carbide Roughers

Short Design

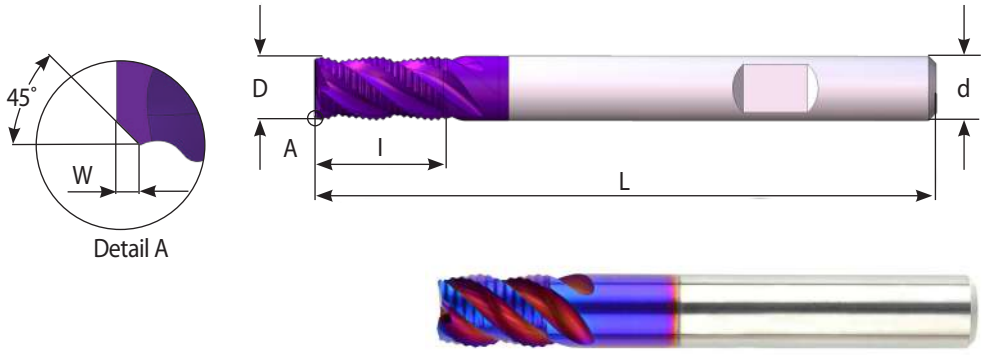

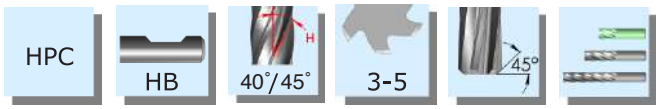

Grade	P	M	K	N	S	H
CR3	●	●	●	○	●	≤56 HRc

Ordering Code	d	D	W	No. of Flutes	l	L
RM 0603 C05	6	3	0.2	3	5	58
RM 0604 C09	6	4	0.3	3	9	58
RM 0605 D10	6	5	0.3	4	10	58
RM 0606 D10	6	6	0.3	4	10	58
RM 0808 D12	8	8	0.3	4	12	64
RM 1010 D14	10	10	0.3	4	14	73
RM 1212 D16	12	12	0.4	4	16	84
RM 1414 D20	14	14	0.5	4	20	84
RM 1616 E27	16	16	0.5	5	27	105

Order example: RM 0606 D10 CR3

Long Design

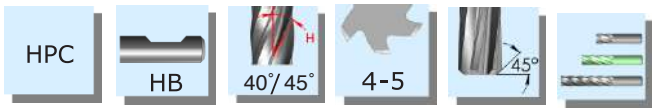

Grade	P	M	K	N	S	H
CR3	●	●	●	○	●	≤56 HRc

Ordering Code	d	D	W	No. of Flutes	l	L
RM 0606 D16	6	6	0.3	4	16	58
RM 0807 D16	8	7	0.3	4	16	64
RM 0808 D18	8	8	0.3	4	18	64
RM 1010 D22	10	10	0.3	4	22	73
RM 1212 D26	12	12	0.4	4	26	84
RM 1414 D30	14	14	0.5	4	30	92
RM 1616 E32	16	16	0.5	5	32	92
RM 2020 E40	20	20	0.5	5	40	104

Order example: RM 1212 D26 CR3

● First choice ○ Alternative

Solid Carbide Roughers with Neck

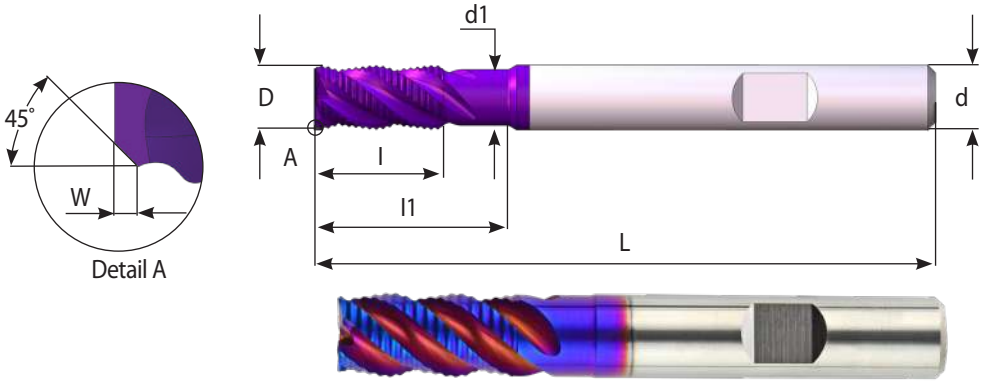

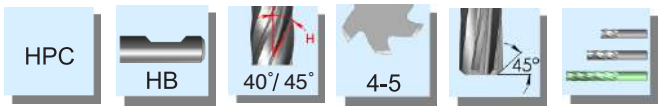

Grade	P	M	K	N	S	H
CR3	●	●	●	○	●	≤56 HRc

Ordering Code	d	D	l	l1	d1	W	No. of Flutes	L
RM 0606 D13 N18	6	6	13	18	5.8	0.3	4	58
RM 0808 D17 N24	8	8	17	24	7.7	0.3	4	64
RM 1010 D21 N30	10	10	21	30	9.7	0.3	4	73
RM 1212 D25 N36	12	12	25	36	11.6	0.4	4	84
RM 1616 E33 N48	16	16	33	48	15.5	0.5	5	105

Order example: RM 1010 D21 N30 CR3

● First choice ○ Alternative

Solid Carbide Roughers - Aluminum Machining

Features

- High Performance Cutting (HPC)
- Optimal flute geometry delivers maximum metal removal rates and better chip evacuation
- Low cutting forces
- Reinforced corner chamfer, promotes additional strength for longer tool life
- Uncoated smooth polished surface finish

Carbide Grade: CA5

Ultra-Fine carbide grade with high hardness and toughness provides high cutting edge stability and wear resistance.

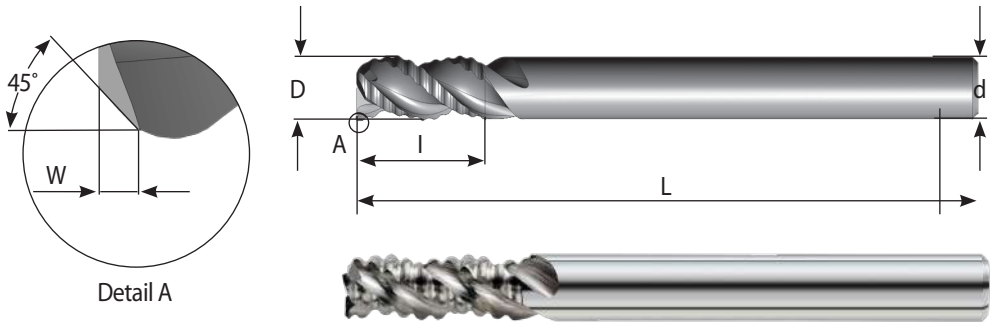



Grade	P	M	K	N	S	H
CA5		○	○	●	○	

Ordering Code	d	D	W	No. of Flutes	l	L
RMA 0604 C08	6	4	0.3	3	8	57
RMA 0606 C16	6	6	0.3	3	16	57
RMA 0808 C19	8	8	0.3	3	19	63
RMA 1010 C22	10	10	0.3	3	22	72
RMA 1212 C26	12	12	0.4	3	26	83

Order example: RMA 0604 C08 CA5

● First choice ○ Alternative

Solid Carbide Roughers - Aluminum Machining

with internal coolant through the flutes

The coolant bores provides high coolant pressure through the tool into the application pre-hole, and wash the chips away.

Carbide Grade: CA5

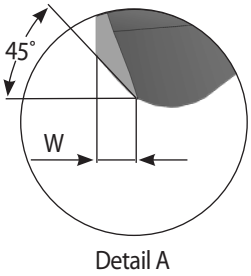





Grade	P	M	K	N	S	H
CA5		○	○	●	○	

Ordering Code	d	D	W	No. of Flutes	l	L
RMA 0606 C16 Z	6	6	0.3	3	16	58
RMA 0808 C19 Z	8	8	0.3	3	19	64
RMA 1010 C22 Z	10	10	0.3	3	22	73
RMA 1212 C26 Z	12	12	0.4	3	26	84

Order example: RMA 0808 C19 Z CA5

● First choice ○ Alternative

Technical Section

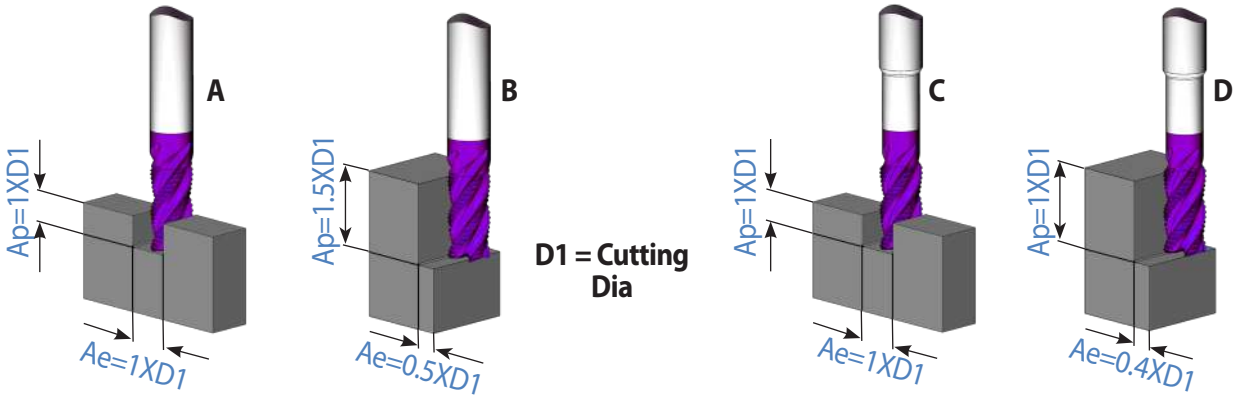

Roughers

Roughers with Neck

Cutting Data

Roughers with neck (C, D) can be used with same feed and speed as below.

ISO Standard	Materials Class	Vc [m/min]	Fz [mm/tooth] Cutting Diameter			
			Ø3- Ø4	Ø5- Ø6	Ø7- Ø10	Ø12- Ø20
P	Low & Medium Carbon Steels <0.55%C	A: 120-180 B: 140-200	A: 0.012-0.02 B: 0.018-0.024	A: 0.025-0.03 B: 0.03-0.036	A: 0.035-0.05 B: 0.048-0.06	A: 0.055-0.08 B: 0.072-0.096
	High Carbon Steels ≥0.55%C	A: 110-160 B: 140-180	A: 0.01-0.015 B: 0.015-0.02	A: 0.015-0.02 B: 0.025-0.03	A: 0.03-0.04 B: 0.035-0.045	A:0.04-0.055 B: 0.06-0.08
	Alloy Steels, Treated Steels	A: 100-140 B: 130-160	A: 0.009-0.012 B: 0.009-0.012	A: 0.015-0.018 B: 0.015-0.018	A: 0.024-0.03 B: 0.024-0.03	A: 0.036-0.048 B: 0.036-0.048
M	Stainless Steel-Free Cutting	A: 100-140 B: 130-150	A: 0.009-0.012 B: 0.012-0.016	A: 0.015-0.018 B: 0.02- 0.024	A: 0.024-0.03 B: 0.032-0.04	A: 0.036-0.048 B: 0.048-0.064
	Stainless Steel-Austenitic	A: 70-100 B: 90-130	A: 0.008-0.011 B: 0.01-0.016	A: 0.01-0.015 B: 0.015- 0.024	A: 0.02-0.025 B: 0.03-0.04	A: 0.03-0.04 B: 0.045-0.06
	Cast Steels	A: 120-160 B: 140-180	A: 0.009-0.012 B: 0.012-0.016	A: 0.015-0.018 B: 0.02- 0.024	A: 0.024-0.03 B: 0.032-0.04	A: 0.036-0.048 B: 0.048-0.064
K	Cast Iron	A: 100-160 B: 140-180	A: 0.012-0.02 B: 0.018-0.024	A: 0.025-0.03 B: 0.03-0.036	A: 0.035-0.05 B: 0.048-0.06	A: 0.055-0.08 B: 0.072-0.096
N	Aluminum ≤12%Si, Copper	A: 180-250 B: 200-300	A: 0.015-0.025 B: 0.018-0.03	A: 0.03-0.04 B: 0.035-0.045	A: 0.04-0.06 B: 0.045-0.065	A: 0.06-0.09 B: 0.065-0.095
	Aluminum >12%Si	A: 100-200 B: 130-250	A: 0.01-0.02 B: 0.01-0.02	A: 0.025-0.035 B: 0.03-0.04	A: 0.035-0.055 B: 0.04-0.05	A: 0.055-0.08 B: 0.05-0.09
	Synthetics, Duroplastics, Thermoplastics	A: 180-250 B: 200-300	A: 0.015-0.025 B: 0.018-0.03	A: 0.03-0.04 B: 0.035-0.045	A: 0.04-0.06 B: 0.045-0.065	A: 0.06-0.09 B: 0.065-0.095
S	Nickel alloys, Titanium alloys	A: 50-70 B: 60-80	A: 0.012-0.016 B: 0.012-0.016	A: 0.02-0.024 B: 0.02-0.024	A: 0.032-0.04 B: 0.032-0.04	A: 0.048-0.064 B: 0.048-0.064
H	Hardened Steel 45-50 HRc	A: 50-70 B: 60-80	A: 0.01-0.02 B: 0.018-0.024	A: 0.02-0.025 B: 0.025-0.03	A: 0.03-0.04 B: 0.04-0.05	A: 0.04-0.06 B: 0.06-0.08
	Hardened Steel 51-56 HRc	A: 40-60 B: 50-70	A: 0.01-0.015 B: 0.015-0.02	A: 0.015-0.025 B: 0.02-0.025	A: 0.02-0.035 B: 0.025-0.04	A: 0.03-0.055 B: 0.035-0.065

Indexable CMT Roughers and Finishers

For excellent performance

- Solid and accurate clamping method enables full repeatability
- Working at high machining parameters
- Modular system using the standard CMT tool holders with various shank options
- Enables machining with large overhang

Carbide grade: CR3
Ultra-Fine carbide grade with high hardness and toughness provides high cutting edge stability and wear resistance.
A New Generation of PVD Coating for High-Performance Cutting Applications.

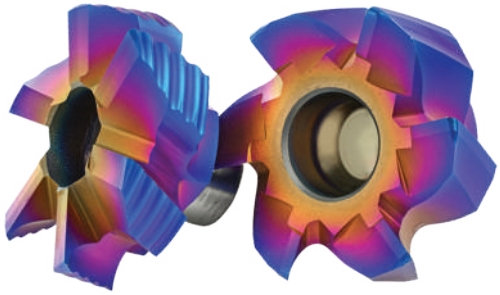

Product Identification

Ordering Codes

C	RM	160	F	W50	CR3
C = CMT Inserts	RM = Roughers End Mills EM = Finish End Mills	Cutting Diameter 160 = 16.0 mm 170 = 17.0 mm 200 = 20.0 mm	Number of Flutes F = 6	Width 50 = 5.0 mm	Carbide Grade

Roughers

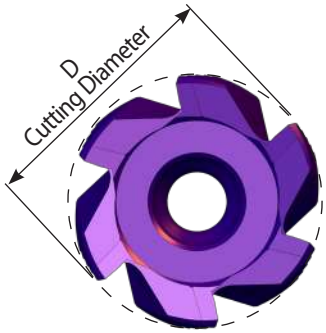

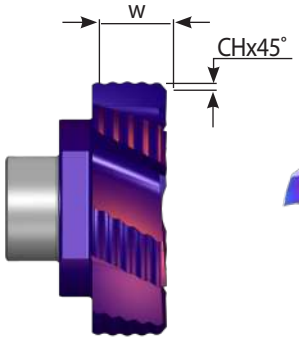

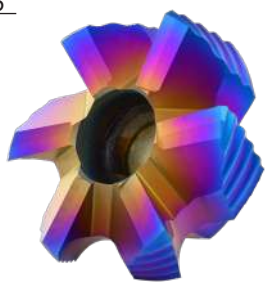

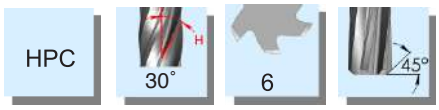

Grade	P	M	K	N	S	H
CR3	●	●	●	○	●	≤56 HRc

Insert Type	Ordering Code	D	No. of Flutes	W	CH
S20	**CRM160 F W50**	16.0	6	5.0	0.4
S20	**CRM170 F W50**	17.0	6	5.0	0.4
S20	**CRM200 F W50**	20.0	6	5.0	0.4

Order example: CRM170 F W50 CR3

Finishers

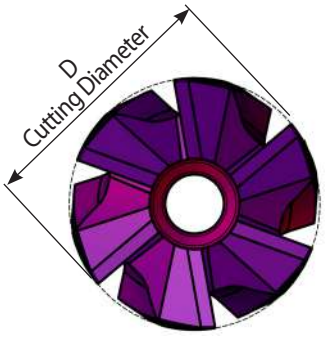



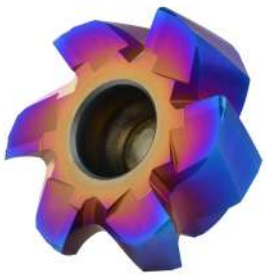



Grade	P	M	K	N	S	H
CR3	●	●	●	○	●	≤56 HRc

Insert Type	Ordering Code	D	No. of Flutes	W	R
S20	**CEM160 F W50**	16.0	6	5.0	0.1
S20	**CEM170 F W50**	17.0	6	5.0	0.1
S20	**CEM200 F W50**	20.0	6	5.0	0.1

Order example: CEM200 F W50 CR3

The CMT Roughers should be used with the toolholders shown on page B14-33

● First choice ○ Alternative

Steel Toolholders With internal coolant

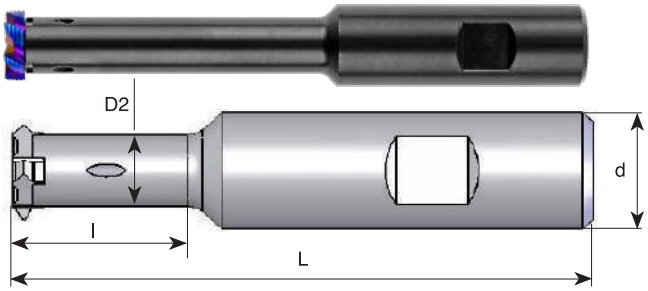

Ordering Code	Insert Type	d	D2	l	L	Insert Screw	Torx Key
SRC 1618 F	S20	16	12.0	25	80	S16	K16
SRC 1618 G	S20	16	12.0	40	90	S16	K16
SRC 1618 H	S20	16	13.8	48	100	S16	K16
SRC 2018 H	S20	20	13.8	32	100	S16	K16
SRC 2018 J	S20	20	13.8	48	110	S16	K16
SRC 2018 L	S20	20	13.8	74	140	S16	K16

Carbide Shank Toolholders With internal coolant

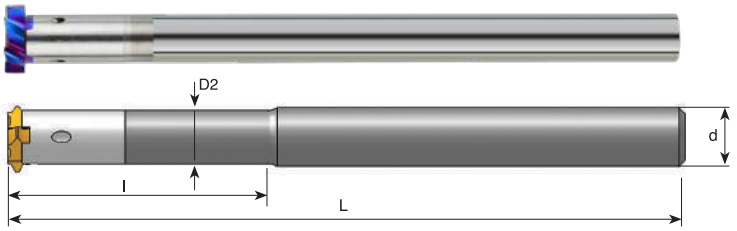

Ordering Code	Insert Type	d	D2	l	L	Insert Screw	Torx Key
CRC 1218 P	S20	12	12.0	-	170	S16	K16
CRC 1618 L48 R	S20	16	13.8	48	195	S16	K16
CRC 1618 L74 R	S20	16	13.8	74	195	S16	K16

CR-Supercut High Feed End-Mills



High Performance milling tools, designed for high feed rates with shallow cutting depths.
Innovative tool geometry enables extremely high **M**aterial **R**emoval **R**ate (MRR) and high machine productivity.
High feed machining is the first choice for applications with deep and shallow workpiece features, 3D profiling, mold & die applications and machining in unstable conditions.

- High Performance Cutting (HPC)
- Up to 3xD neck length allowing ramping or helical interpolation working techniques
- High rates of material removal, provides a reduced cycle time
- Same tool for roughing or semi-finishing operations
- For a wide range of materials up to 62 HRc

Carbide grade: CR3
Ultra-Fine carbide grade with high hardness and toughness provides high cutting edge stability and wear resistance.
A New Generation of PVD Coating for High-Performance Cutting Applications.

CR-Supercut High Feed End-Mills
Features

Optimized cutting-edge geometry

For maximum material removal rate

Multi-function operation

Ramping,
Helical interpolation
Face milling

Long neck

Allows extended reach to deep applications

Short flutes and large core

For high rigidity

HPC – High Performance Cutting

High feed rate for maximum material removal rate

CR3 grade

Superior carbide grade combined with new generation of PVD coating



Product Identification

Ordering Codes

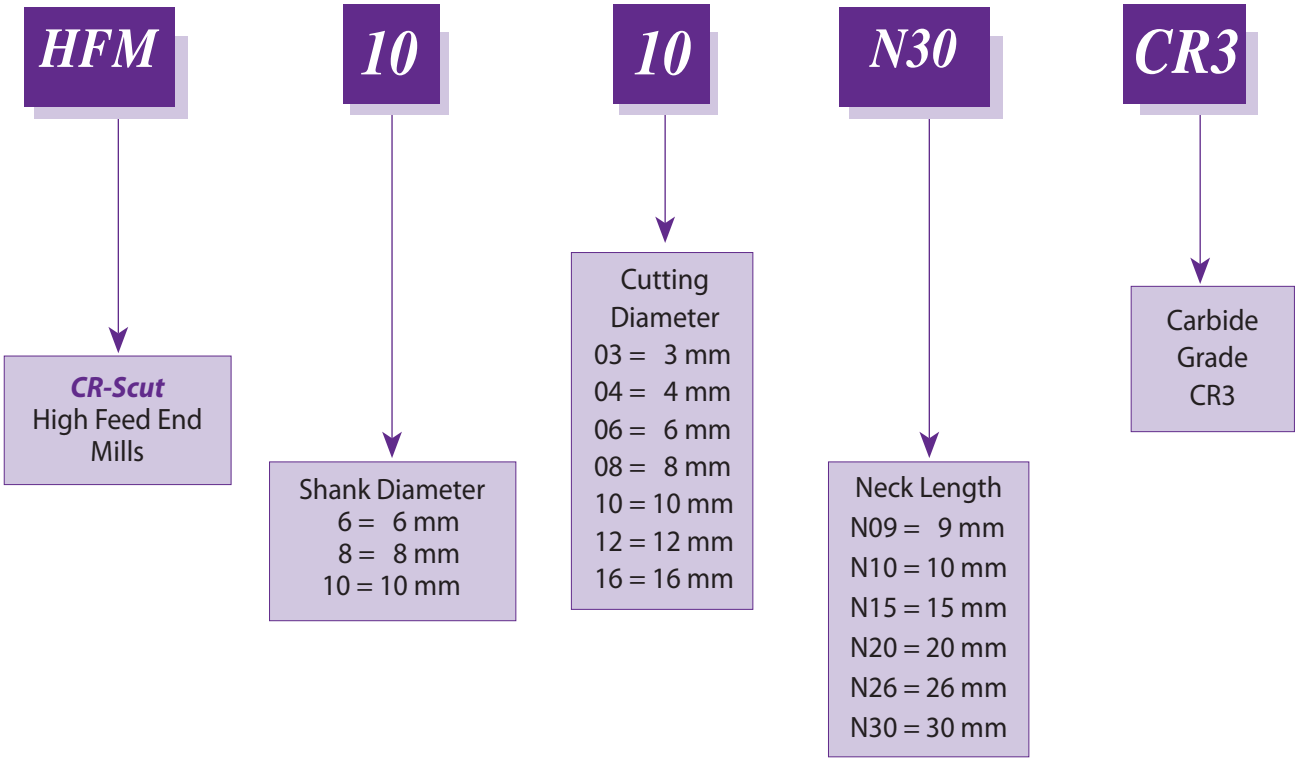

Solid Carbide High Feed End-Mills

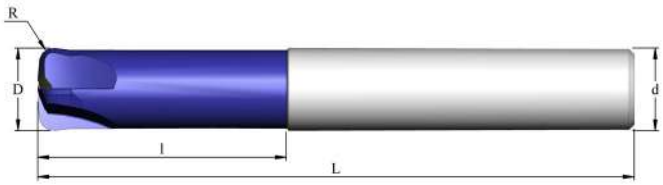



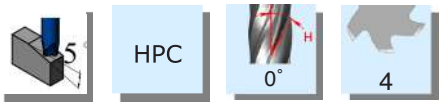

Grade	P	M	K	N	S	H
CR3	●	●	●		●	≤62 HRc

Ordering Code	d	D	No. of Flutes	R	l	L
HFM 0603 N09	6	3	4	0.4	9	57
HFM 0604 N10	6	4	4	0.5	10	57
HFM 0605 N15	6	5	4	0.8	15	57
HFM 0606 N20	6	6	4	0.9	20	57
HFM 0808 N26	8	8	4	1.3	26	63
HFM 1010 N30	10	10	4	1.7	30	72
HFM 1212 N34	12	12	4	2.1	34	83
HFM 1616 N42	16	16	4	2.7	42	110

Order example: HFM 0603 N09 CR3

● First choice ○ Alternative

Technical Section

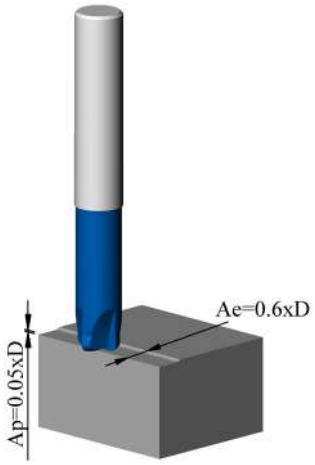

D = Cutting Dia

Cutting Data

ISO	Materials	Cutting Speed Vc [m/min]	Feed Fz [mm/tooth] Tool Cutting Diameter							
			Ø3	Ø4	Ø5	Ø6	Ø8	Ø10	Ø12	Ø16
P	Low & Medium Carbon Steels <0.55%C	140 - 200	0.25	0.25	0.30	0.35	0.35	0.45	0.55	0.60
	High Carbon Steels ≥0.55%C	140 - 200	0.25	0.25	0.30	0.35	0.35	0.45	0.55	0.60
	Alloy Steels, Treated Steels	120 - 200	0.20	0.20	0.25	0.30	0.30	0.40	0.50	0.55
M	Stainless Steel-Free Cutting	100 - 140	0.10	0.15	0.20	0.20	0.30	0.30	0.40	0.50
	Stainless Steel-Austenitic	90 - 130	0.10	0.10	0.15	0.15	0.20	0.20	0.30	0.40
	Cast Steels	90 - 130	0.10	0.10	0.15	0.15	0.20	0.20	0.30	0.40
K	Cast Iron	100 - 140	0.10	0.15	0.20	0.20	0.30	0.30	0.40	0.50
S	Heat-resistant alloys	70 - 90	0.10	0.10	0.10	0.15	0.15	0.20	0.20	0.25
	Titanium alloys	80 - 100	0.10	0.10	0.10	0.15	0.15	0.20	0.20	0.25
H	Hardened Steel 45-50 HRc	80 - 190	0.15	0.15	0.20	0.25	0.25	0.35	0.45	0.50
	Hardened Steel 51-56 HRc	80 - 180	0.10	0.10	0.10	0.20	0.20	0.30	0.40	0.40
	Hardened Steel 56-62 HRc	40 - 80	0.10	0.10	0.10	0.15	0.15	0.20	0.25	0.30

Ramping

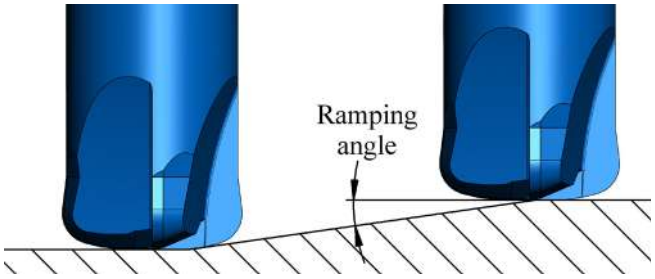

Ramping angle	Feed
1°	100%
2°	80%
3°	70%
4°	60%
5°	50%



Case Study

Application
Pocket machining by helical interpolation

Workpiece material
Tempered steel SAE 4340
Hardness: 45 HRc

End-Mill description
HFM 0604 N10 CR3
Shank diameter: Ø6 mm
Cutting diameter: Ø4 mm
Number of flutes: 4
Neck length: 10 mm

Cutting conditions
Cutting speed: 170 m/min
Feed: 0.15 mm/tooth
Ap=0.2 mm

Machine
Mazak Integrex
Coolant: emulsion 6%

Results
Tool life: The tool worked 94 minutes and is still in good condition to continue.

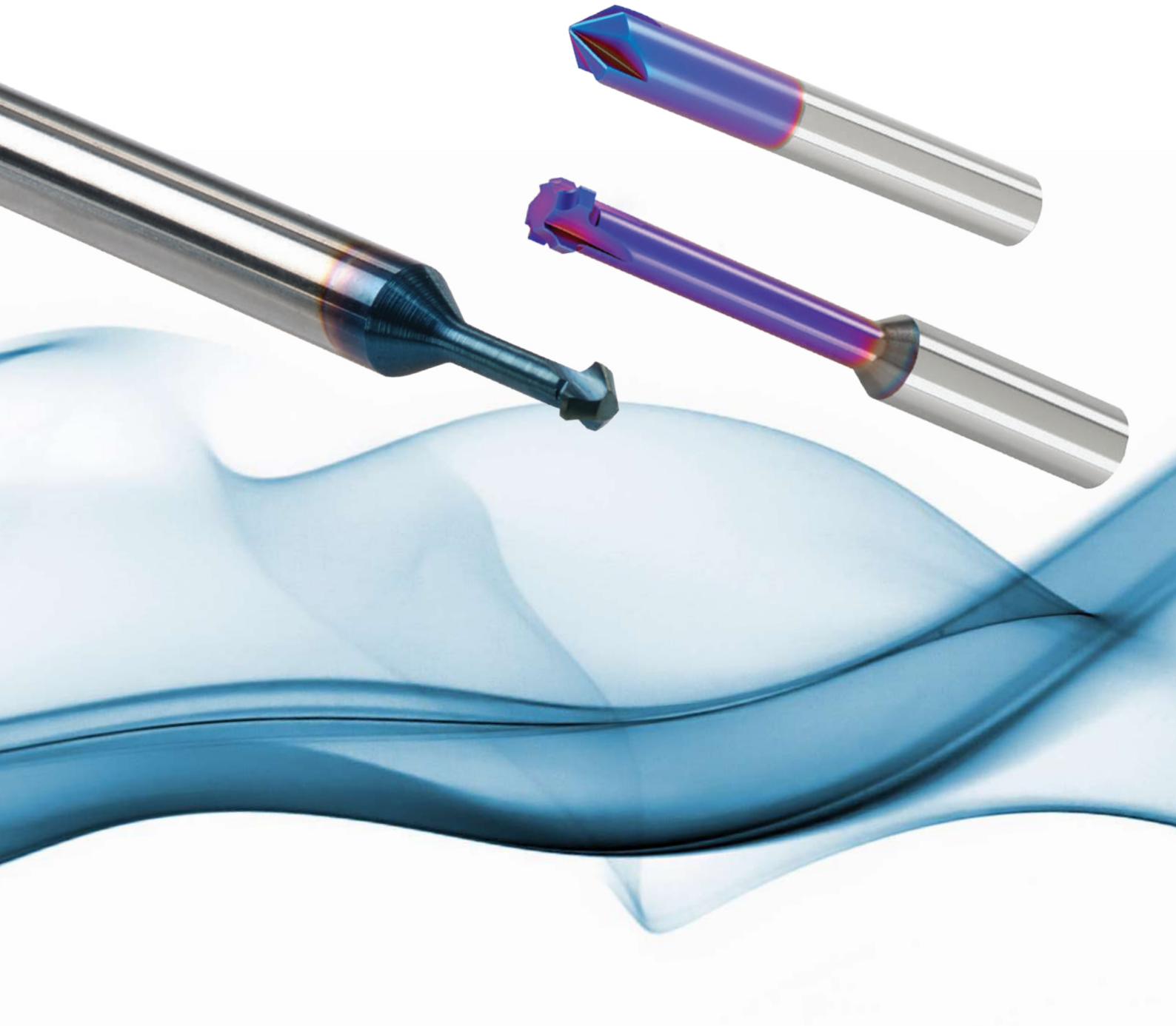

Contents:	Page:	Contents:	Page:
Product Identification	2	Countersink	7
Mini Chamfer 90˚, 60˚, 150˚	3-4	Technical Section	8-10
Mini Chamfer Dovetail 45˚	5	Mini Chamfer Cutting Data	8
Mini Chamfer Kit	5	Solid Carbide radius fillet End-Mills Cutting Data	9
Solid Carbide radius fillet End-Mills	6	Countersink Cutting Data	10

Product Identification

Mini Chamfer, Solid Carbide Radius Fillet End-Mills and Countersink

Ordering Codes

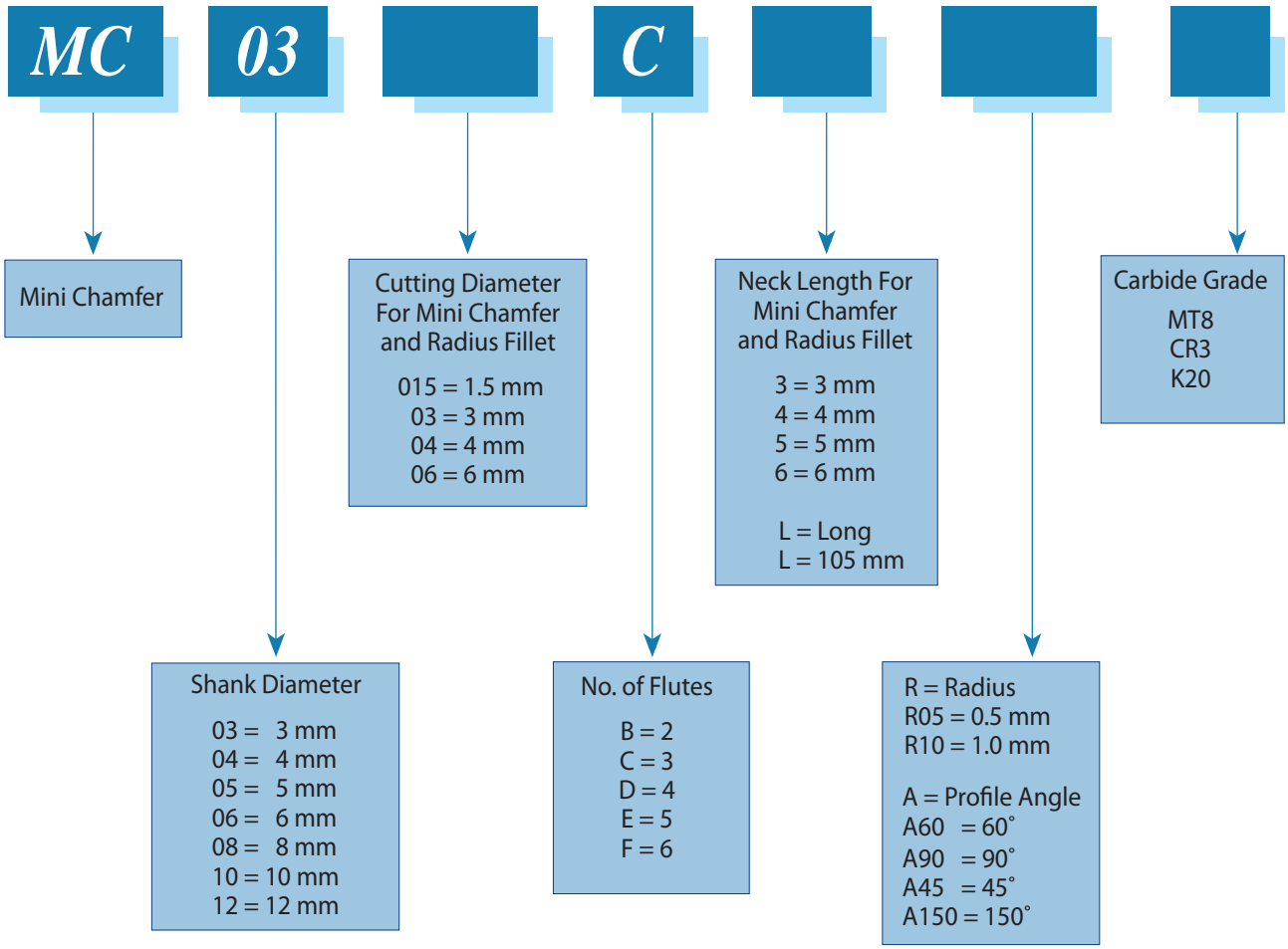

Mini Chamfer

- Optimal for deburring, back chamfering and grooving.
- Double side cutting.
- Spiral flute allows smooth cutting action.

Demonstration

Carbide grade: MT8

Sub-micron grade with advanced PVD triple coating (ISO K10-K20). Extremely high heat resistant and smooth cutting operation, for high performance and normal machining condition.
General purpose for all materials.

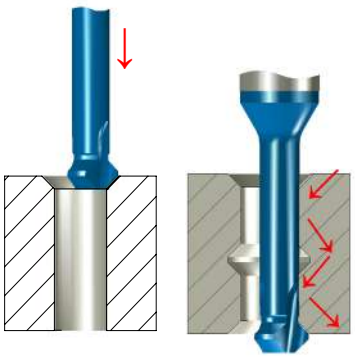

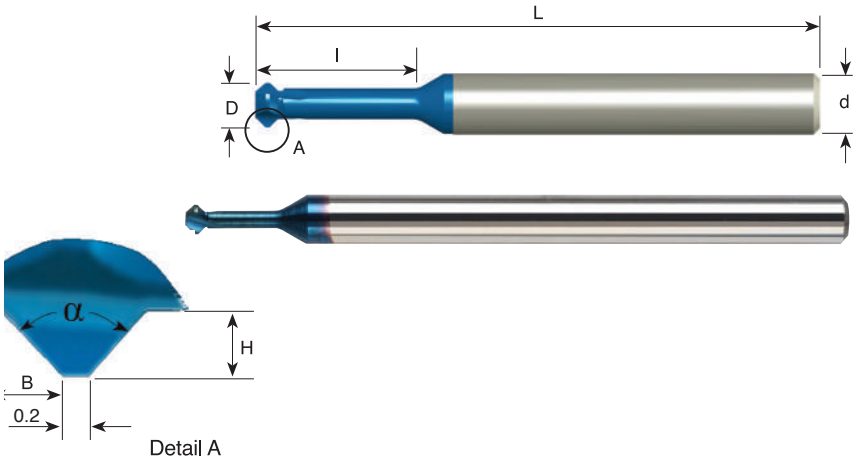

90°

Grade	P	M	K	N	S	H
MT8	●	●	●	○	●	≤50 HRc

Ordering Code	d	D	l	H	B	α	No. of Flutes	L
MC 03015 C3 A90	3	1.5	3.8	0.3	0.4	90°	3	39
MC 0302 C5 A90	3	2.0	5.0	0.4	0.5	90°	3	39
MC 03025 C6 A90	3	2.5	6.3	0.5	0.6	90°	3	39
MC 0303 C7 A90	3	3.0	7.5	0.6	0.7	90°	3	39
MC 04035 C9 A90	4	3.5	8.8	0.7	0.8	90°	3	51
MC 0404 C10 A90	4	4.0	10.0	0.8	0.9	90°	3	51
MC 05045 C11 A90	5	4.5	11.3	1.0	1.1	90°	3	51
MC 0505 C12 A90	5	5.0	12.5	1.1	1.2	90°	3	51
MC 06055 C13 A90	6	5.5	13.8	1.2	1.3	90°	3	51
MC 0606 C15 A90	6	6.0	15.0	1.5	1.6	90°	3	51

Order example: MC 0302 C5 A90 MT8

● First choice ○ Alternative

Mini Chamfer and Countersink

Long Reach 90°

Grade	P	M	K	N	S	H
MT8	●	●	●	○	●	≤50 HRc

Ordering Code	d	D	l	H	B	α	No. of Flutes	L
MC 0303 C12 A90	3	3.0	12.0	0.6	0.7	90°	3	39
MC 04035 C14 A90	4	3.5	14.0	0.7	0.8	90°	3	51
MC 0404 C16 A90	4	4.0	16.0	0.8	0.9	90°	3	51
MC 0404 C16L A90	4	4.0	16.0	0.8	0.9	90°	3	105
MC 05045 C18 A90	5	4.5	18.0	1.0	1.1	90°	3	51
MC 0505 C20 A90	5	5.0	20.0	1.1	1.2	90°	3	51
MC 0505 C20L A90	5	5.0	20.0	1.1	1.2	90°	3	105
MC 06055 C22 A90	6	5.5	22.0	1.2	1.3	90°	3	58
MC 0606 C24 A90	6	6.0	24.0	1.5	1.6	90°	3	58
MC 0606 C24L A90	6	6.0	24.0	1.5	1.6	90°	3	105
MC 0808 D28 A90	8	8.0	28.0	1.6	1.7	90°	4	64
MC 0808 D28L A90	8	8.0	28.0	1.6	1.7	90°	4	105
MC 1010 E35 A90	10	10.0	35.0	1.8	1.9	90°	5	73
MC 1212 F42 A90	12	12.0	42.0	2.1	2.2	90°	6	84

60°

Ordering Code	d	D	l	H	B	α	No. of Flutes	L
MC 0302 C5 A60	3	2.0	5.0	0.4	0.3	60°	3	39
MC 0303 C7 A60	3	3.0	7.5	0.6	0.3	60°	3	39
MC 04035 C9 A60	4	3.5	8.8	0.7	0.5	60°	3	51
MC 0404 C10 A60	4	4.0	10.0	0.8	0.5	60°	3	51
MC 05045 C11 A60	5	4.5	11.3	1.0	0.6	60°	3	51
MC 0505 C12 A60	5	5.0	12.5	1.1	0.7	60°	3	51

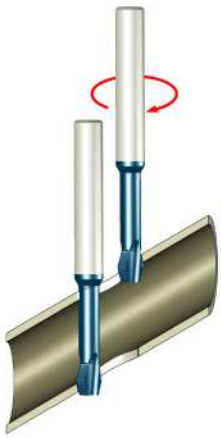

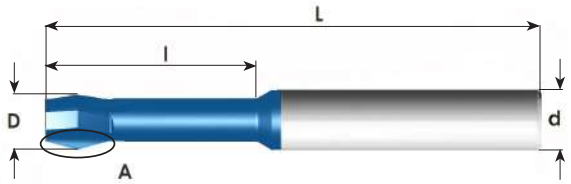

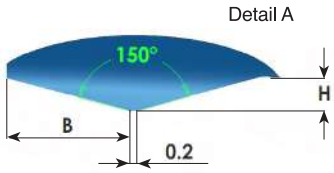



150°

Grade	P	M	K	N	S	H
MT8	●	●	●	○	●	≤50 HRc

Ordering Code	d	D	l	H	B	No. of Flutes	L
MC 0303 C12 A150	3	3.0	12.0	0.6	2.2	3	39
MC 0404 C16 A150	4	4.0	16.0	0.8	3.0	3	51
MC 0404 C16L A150	4	4.0	16.0	0.8	3.0	3	105
MC 0505 C20 A150	5	5.0	20.0	1.0	3.8	3	51
MC 0505 C20L A150	5	5.0	20.0	1.0	3.8	3	105
MC 0606 C24 A150	6	6.0	24.0	1.0	3.8	3	58
MC 0606 C24L A150	6	6.0	24.0	1.0	3.8	3	105
MC 0808 C28 A150	8	8.0	28.0	1.0	3.8	3	64
MC 0808 C28L A150	8	8.0	28.0	1.0	3.8	3	105

Order example: MC 0303 C12 A150 MT8

● First choice ○ Alternative

Mini Chamfer and Countersink

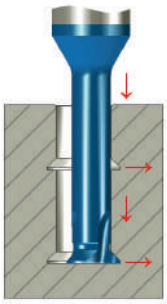

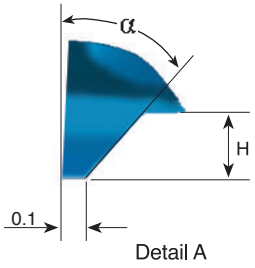

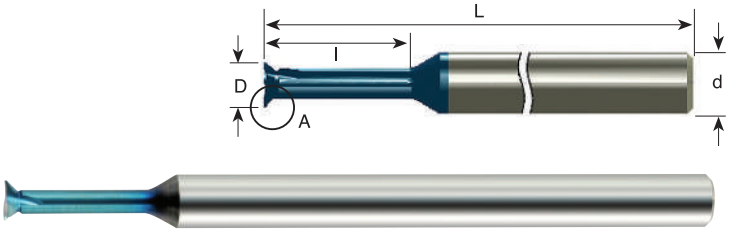

Grade	P	M	K	N	S	H
MT8	●	●	●	○	●	≤50 HRc

Dovetail 45°

Ordering Code	d	D	l	H	α	No. of Flutes	L
MC 03015 C4 A45	3	1.5	4.5	0.3	45°	3	39
MC 0302 C6 A45	3	2.0	6.0	0.4	45°	3	39
MC 03025 C7 A45	3	2.5	7.5	0.5	45°	3	39
MC 0303 C12 A45	3	3.0	12.0	0.6	45°	3	39
MC 04035 C14 A45	4	3.5	14.0	0.7	45°	3	51
MC 0404 C16 A45	4	4.0	16.0	0.8	45°	3	51
MC 05045 C18 A45	5	4.5	18.0	1.0	45°	3	51
MC 0505 C20 A45	5	5.0	20.0	1.1	45°	3	51
MC 06055 C22 A45	6	5.5	22.0	1.2	45°	3	58
MC 0606 C24 A45	6	6.0	24.0	1.5	45°	3	58

One side cutting

● First choice ○ Alternative

Order example: MC 0303 C12 A45 MT8

Mini Chamfer Kit

Kit Description: Kit KMC

Contents	Qty
MC 0303 C12 A90	1
MC 03025 C6 A90	1
MC 0404 C10 A90	1
MC 04035 C9 A90	1
MC 05045 C11 A90	1
MC 0606 C24 A90	1



Solid Carbide radius fillet End-Mills



Features

- Tools for different radius filleting
- Two, three and four flutes
- Cylindrical shank DIN6535-HA

Carbide grade: CR3
Ultra-Fine carbide grade with high hardness and toughness provides high cutting edge stability and wear resistance.
A New Generation of PVD Coating for High-Performance Cutting Applications.

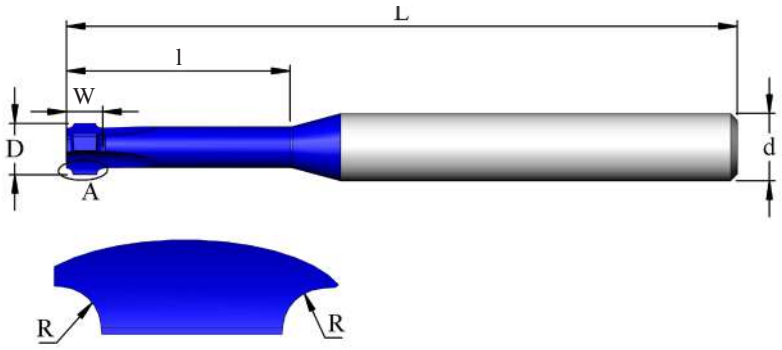

DETAIL A

Grade	P	M	K	N	S	H
CR3	●	●	●	○	●	≤50 HRc

Ordering Code	d	D	l	R	W	No. of Flutes	L
MC 0302 B8 R02	3	2.0	8.0	0.2	1.4	2	38
MC 03025 B9 R03	3	2.5	9.0	0.3	1.6	2	38
MC 03025 B10 R04	3	2.5	10.0	0.4	2.0	2	38
MC 0303 B12 R05	3	3.0	12.0	0.5	2.2	2	38
MC 0605 C20 R05	6	5.0	20.0	0.5	2.5	3	57
MC 0605 C25 R06	6	5.0	25.0	0.6	2.7	3	57
MC 0606 C30 R08	6	6.0	30.0	0.8	3.3	3	57
MC 08065 C35 R10	8	6.5	35.0	1.0	3.7	3	63
MC 08075 D35 R12	8	7.5	35.0	1.2	4.1	4	63
MC 10085 D35 R15	10	8.5	35.0	1.5	4.9	4	72
MC 1009 D35 R18	10	9.0	35.0	1.8	5.6	4	72
MC 1010 D35 R20	10	10.0	35.0	2.0	6.0	4	72
MC 1211 D35 R25	12	11.0	35.0	2.5	7.5	4	83
MC 1212 D35 R30	12	12.0	35.0	3.0	8.5	4	83

Order example: MC 0303 B12 R05 CR3

● First choice ○ Alternative

Countersink *Solid Carbide chamfering End-Mills*

Features

- Tools for 45˚ and 30˚ chamfering and deburring
- Four flutes
- Cylindrical shank DIN6535-HA (Weldon shank available upon request)

Carbide grades

CR3

Ultra-Fine carbide grade with high hardness and toughness provides high cutting edge stability and wear resistance.
A **New Generation** of PVD Coating for High-Performance Cutting Applications

K20

Uncoated Sub-Micron carbide grade for Aluminum and non-ferrous materials, Stainless Steels and Titanium.

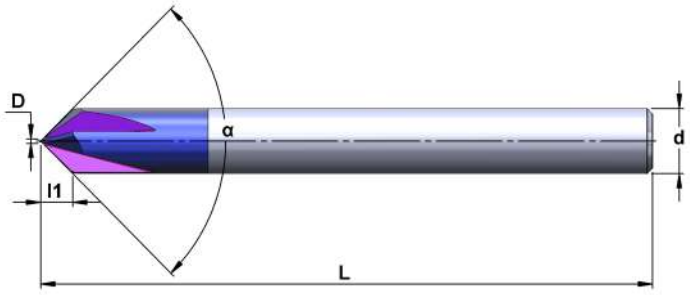



Grade	P	M	K	N	S	H
CR3	●	●	●	○	●	≤58 HRc
K20			●	●	○	

Ordering Code	d	D	l1	L	No. of Flutes	α
MC03 D A60	3	0.2	2.4	38	4	60˚
MC04 D A60	4	0.3	3.2	50		
MC05 D A60	5	0.4	4.0	50		
MC06 D A60	6	0.5	4.8	57		
MC08 D A60	8	0.6	6.4	63		
MC10 D A60	10	0.8	8.0	72		
MC12 D A60	12	1.0	9.5	83		
MC03 D A90	3	0.2	1.4	38	4	90˚
MC04 D A90	4	0.3	1.8	50		
MC05 D A90	5	0.4	2.3	50		
MC06 D A90	6	0.5	2.7	57		
MC08 D A90	8	0.6	3.7	63		
MC10 D A90	10	0.8	4.6	72		
MC12 D A90	12	1.0	5.5	83		

Order example: MC04 D A90 K20

● First choice ○ Alternative

Technical Section

Mini Chamfer
Cutting Data

ISO	Materials	Cutting Speed m/min	Feed mm/tooth Cutting Diameter=D												
			Ø1.5	Ø2	Ø3	Ø4	Ø5	Ø6	Ø7	Ø8	Ø9	Ø10	Ø12	Ø14	Ø16
P	Low and Medium Carbon Steels <0.55%C	60 - 120	0.03	0.04	0.05	0.06	0.08	0.09	0.10	0.11	0.11	0.11	0.12	0.13	0.13
	High Carbon Steels ≥0.55%C	60 - 90	0.02	0.04	0.04	0.06	0.06	0.07	0.08	0.09	0.10	0.10	0.11	0.12	0.13
	Alloy Steels, Treated Steels	50 - 80	0.02	0.03	0.04	0.04	0.04	0.05	0.05	0.06	0.06	0.07	0.08	0.09	0.10
M	Stainless Steels - Free Cutting	70 - 100	0.01	0.02	0.03	0.04	0.04	0.04	0.05	0.06	0.06	0.07	0.08	0.08	0.09
	Stainless Steels - Austenitic	60 - 90	0.01	0.02	0.03	0.04	0.04	0.04	0.05	0.06	0.06	0.07	0.08	0.08	0.09
	Cast Steels	70 - 90	0.02	0.03	0.04	0.04	0.04	0.05	0.05	0.06	0.06	0.07	0.08	0.09	0.10
K	Cast Iron	4 0 - 80	0.03	0.04	0.05	0.06	0.08	0.09	0.10	0.11	0.11	0.11	0.12	0.13	0.13
N	Aluminum ≤12%Si, Copper	100 - 200	0.03	0.04	0.05	0.06	0.08	0.09	0.10	0.11	0.11	0.11	0.12	0.13	0.13
	Aluminum >12% Si	60 - 140	0.02	0.02	0.03	0.04	0.04	0.04	0.05	0.06	0.06	0.07	0.08	0.09	0.10
	Synthetics, Duroplastics, Thermoplastics	50 - 200	0.06	0.08	0.08	0.10	0.11	0.13	0.13	0.13	0.13	0.13	0.13	0.14	0.14
S	Nickel Alloys, Titanium Alloys	20 - 40	0.02	0.02	0.03	0.03	0.04	0.04	0.04	0.04	0.05	0.05	0.05	0.06	0.06
H	Hardened Steel, 45-50 HRc	60 - 70	0.02	0.03	0.04	0.04	0.04	0.04	0.05	0.05	0.06	0.06	0.06	0.07	0.08

Solid Carbide radius fillet End-Mills

Application example

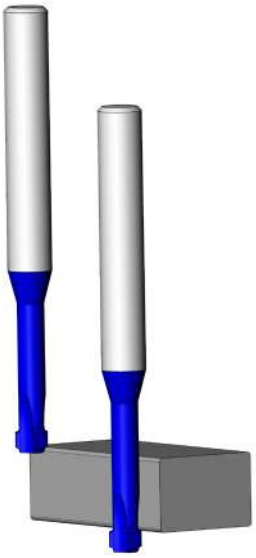

Cutting Data

ISO	Materials Class	Cutting Speed Vc (m/min)	Fz [mm/tooth]				
			Ø1-Ø2	Ø3-Ø4	Ø6-Ø8	Ø10-Ø12	Ø16
P	Low & Medium Carbon Steels <0.55%C	60-70	0.010	0.012	0.015	0.020	0.030
	High Carbon Steels ≥0.55%C	40-60	0.010	0.012	0.015	0.020	0.030
	Alloy Steels, Treated Steels	30-40	0.010	0.012	0.013	0.017	0.025
M	Stainless Steel-Free Cutting	20-30	0.007	0.010	0.010	0.015	0.020
	Stainless Steel-Austenitic	20-30	0.007	0.010	0.010	0.015	0.020
	Cast Steels	20-30	0.007	0.010	0.010	0.015	0.020
K	Cast Iron	30-40	0.010	0.012	0.013	0.017	0.025
N	Aluminum ≤6%Si, Copper	70-100	0.012	0.012	0.015	0.020	0.030
	Aluminum >6%Si	90-150	0.012	0.012	0.015	0.020	0.030
	Synthetics, duroplastics, thermoplastics	100-150	0.015	0.025	0.030	0.040	0.050
S	Nickel alloys, Titanium alloys.	15-30	0.007	0.010	0.010	0.015	0.020
H	Hardened Steel, 45-50 HRc	20-40	0.007	0.010	0.013	0.017	0.025

Countersink

Cutting Data

ISO	Materials Class	Cutting Speed Vc (m/min)
P	Low & Medium Carbon Steels <0.55%C	120 - 240
	High Carbon Steels ≥0.55%C	80 - 180
	Alloy Steels, Treated Steels	50 - 120
M	Stainless Steel-Free Cutting	70 - 100
	Stainless Steel-Austenitic	60 - 140
	Cast Steels	70 - 100
K	Cast Iron	80 - 160
N	Aluminum ≤6%Si, Copper	150 - 500
	Aluminum >6%Si	100 - 250
	Synthetics, duroplastics, thermoplastics	80 - 200
S	Nickel alloys, Titanium alloys.	30 - 90
H	Hardened Steel, 45-50 HRc	60 - 70
	Hardened Steel, 51-58 HRc	50 - 60

d	Feed fz mm/tooth
Ø3-Ø4	0.04 - 0.06
Ø5-Ø6	0.05 - 0.07
Ø8	0.06 - 0.08
Ø10	0.07 - 0.10
Ø12	0.08 - 0.15

Gear Milling

B16



Demonstration

Contents:	Page:	Contents:	Page:
Introduction	2	CMT- Multi Spiral Flute	3
Indexable inserts and holder - U Type	2	Indexable inserts and holder - V type	4
Mini Mill Thread - MTI	3	Applying a Gear Milling request	4
CMT- Vertical Milling	3		

Gear Milling

Innovative tools for producing Gears, Spline and Rack offering versatile solutions according to customer's application.
Wide range of inserts geometries and grades.

Profiles according to DIN 5480, DIN 867, ANSI B92.1 standards.

CPT Gear Milling line is based on standard or special toolholders and custom made inserts according to customer's application, for maximum flexibility and short delivery time. All tools profile are fully ground and highly accurate.

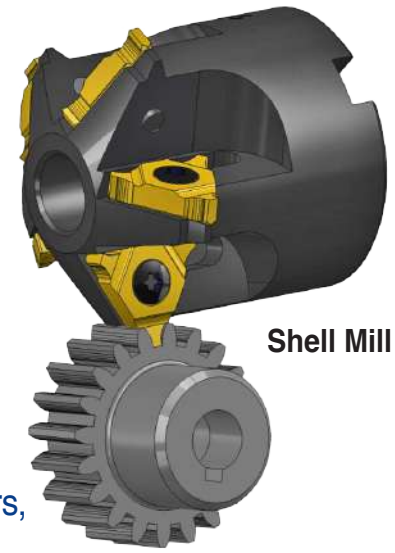

Shell Mill

High Flexibility

- Same tool can be used for different gear sizes and profiles
- Variety of production options on advanced machining centers, multi task machines and 5 axis machines
- In most cases the components can be machined with just one setup

Indexable inserts and holder - U Type

- Inserts with up to three cutting edges
- Multi flute
- For relatively large profiles, and high-powered cuts
- High precision insert's pockets and insert's tips to ensure small run-outs



Weldon shank

Mini Mill Thread - MTI

- Solid carbide tool for high rigidity and stability
- For small and medium profiles
- 3 to 6 cutting edges
- Large range of carbide grades

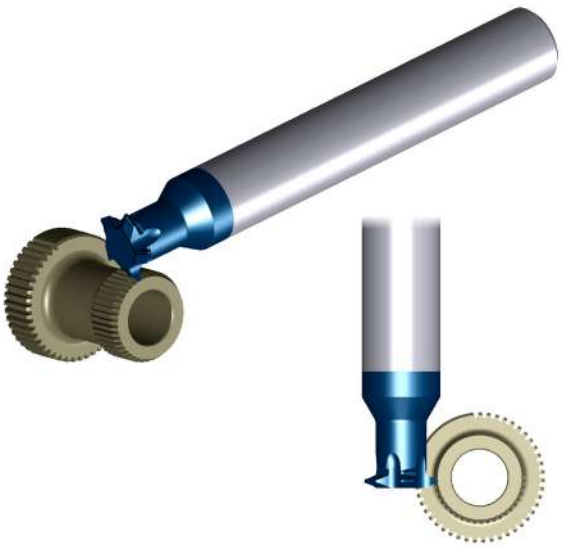

CMT - Vertical Milling

- Vertical gear milling cutters with indexable inserts
- 3 to 4 cutting edges
- Standard steel or carbide CMT toolholders
- With internal coolant



CMT - Multi Spiral Flute

- Multi spiral flute (6 to 8) for high performance and smooth cutting
- Standard steel or carbide CMT toolholders
- With internal coolant

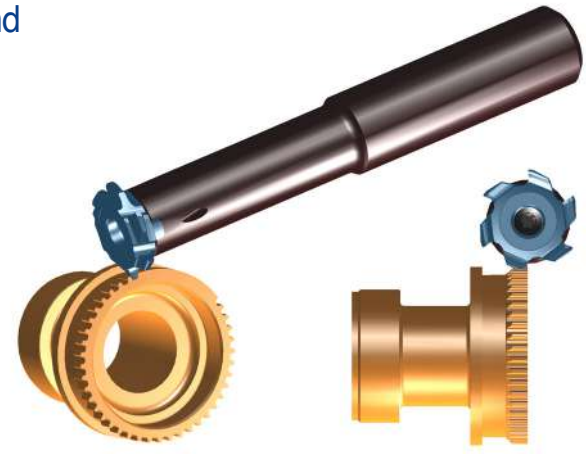

Indexable inserts and holder - V type

- Inserts with up to three cutting edges
- High precision inserts pocket and inserts tip to ensure small run-outs



Disc Mill

Appling a Gear Milling request

Every Gear / Spline request has its own geometry and specifications, in order to provide the best solution the following data is needed:

- Gear / Spline standard
- Complete drawing of the required Gear / Spline standard, according the following specifications:
  - Shape of tooth
  - Number of teeth
  - Major pitch and minor diameter
  - Quality requirements
  - Gear / Spline material
- Preferred solution: Solid carbide or holder with inserts

C.P.T.
Präzisions Werkzeuge

© Copyright CPT GmbH. 2022

CPT GmbH
Danziger Straße 1
71691 Freiberg am Neckar
Tel: +49 (0) 7141 / 14239-00, Fax: +49 (0) 7141 / 14239-20
E-Mail: info@cpt-werkzeuge.de | www.cpt-werkzeuge.de

CPT FCE 03/2022